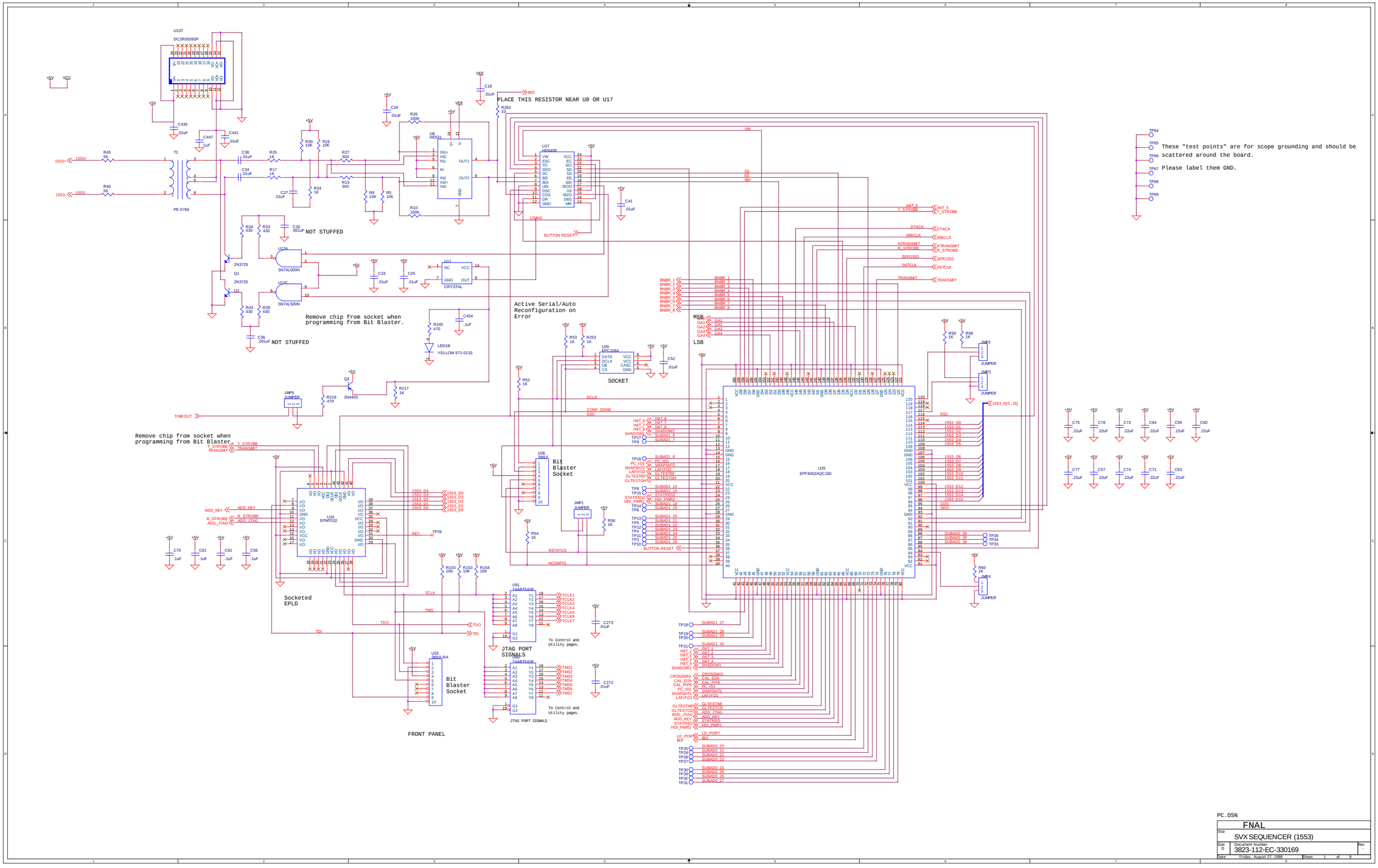

PC.DSN

Title	FNAL
	SVX SEQUENCER (1553)
Size D	Document Number 3823-112-EC-330169
	Rev -
Date: Friday, August 27, 1999	Sheet 1 of 9

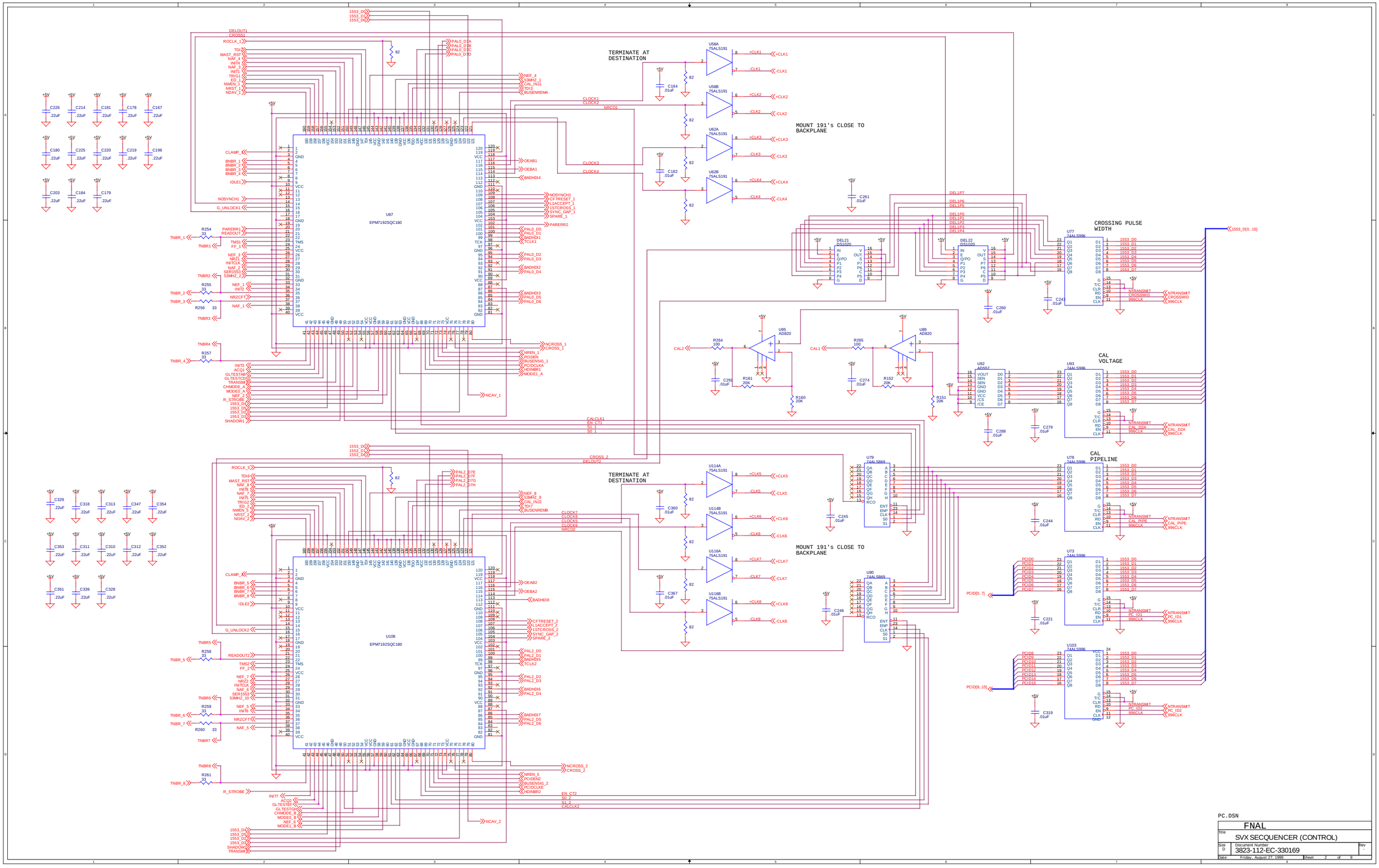
U67
EPM7192SQC160
U106
EPM7192SQC160
TERMINATE AT DESTINATION
MOUNT 191's CLOSE TO BACKPLANE
CROSSING PULSE WIDTH
CAL VOLTAGE
CAL PIPELINE
U58A 75ALS191
U58B 75ALS191
U62A 75ALS191
U62B 75ALS191
U114A 75ALS191
U114B 75ALS191
U116A 75ALS191
U116B 75ALS191
U95 AD820
U89 AD820
U92 AD557
U77 74ALS996
U93 74ALS996
U78 74ALS996
U73 74ALS996
U103 74ALS996
U79 74ALS869
U80 74ALS869
DEL21 DS1020
DEL22 DS1020
PC.DSN
FNAL
SVX SECQUENCER (CONTROL)
Size D
Document Number 3823-112-EC-330169
Rev -
Date: Friday, August 27, 1999
Sheet 2 of 9

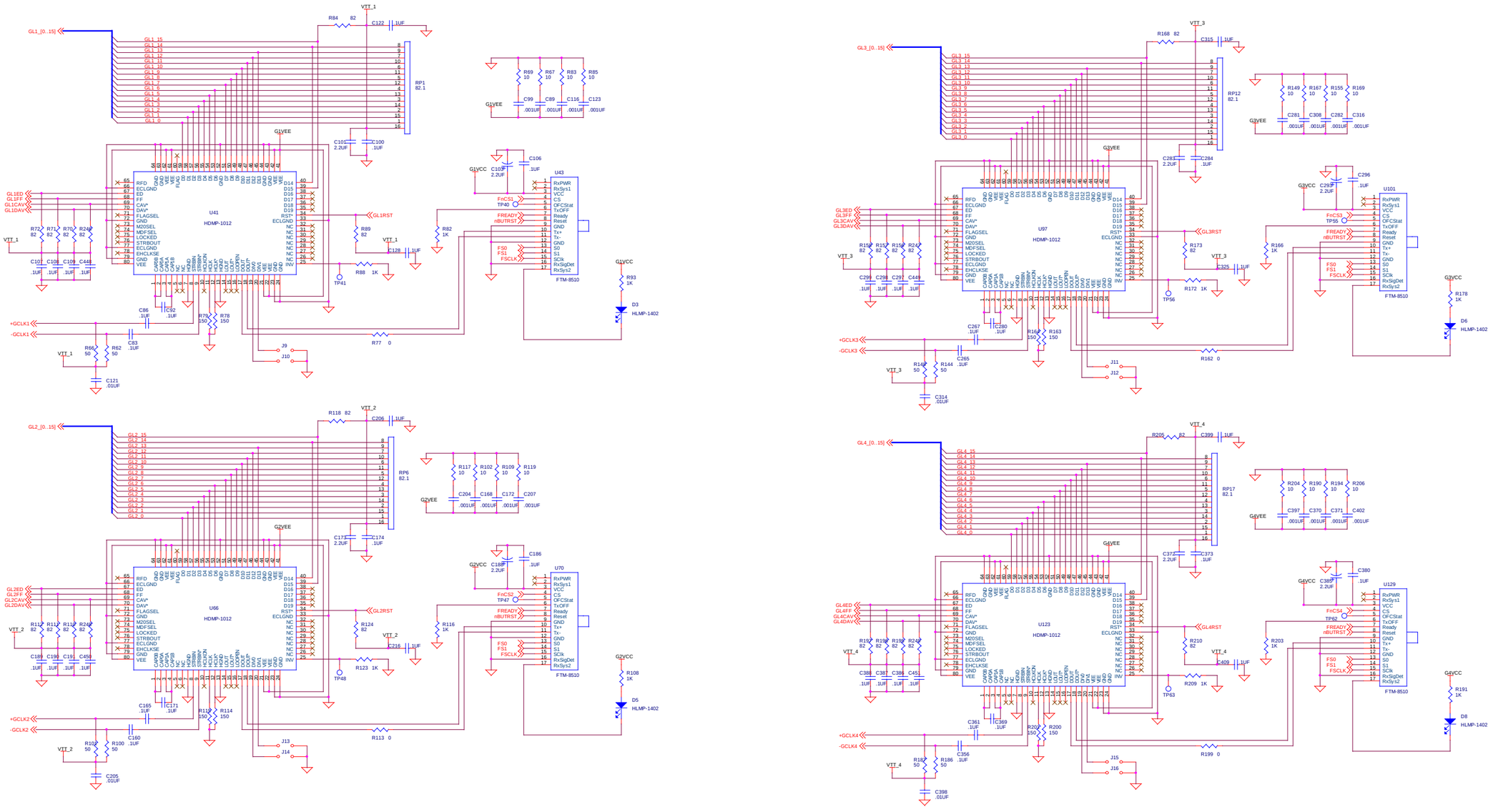

PC.DSN

Title	FNAL SVX SEQUENCER (G_LINK)
Size D	Document Number 3823-112-EC-330169
Rev	-
Date: Monday, June 28, 1999	Sheet 3 of 9

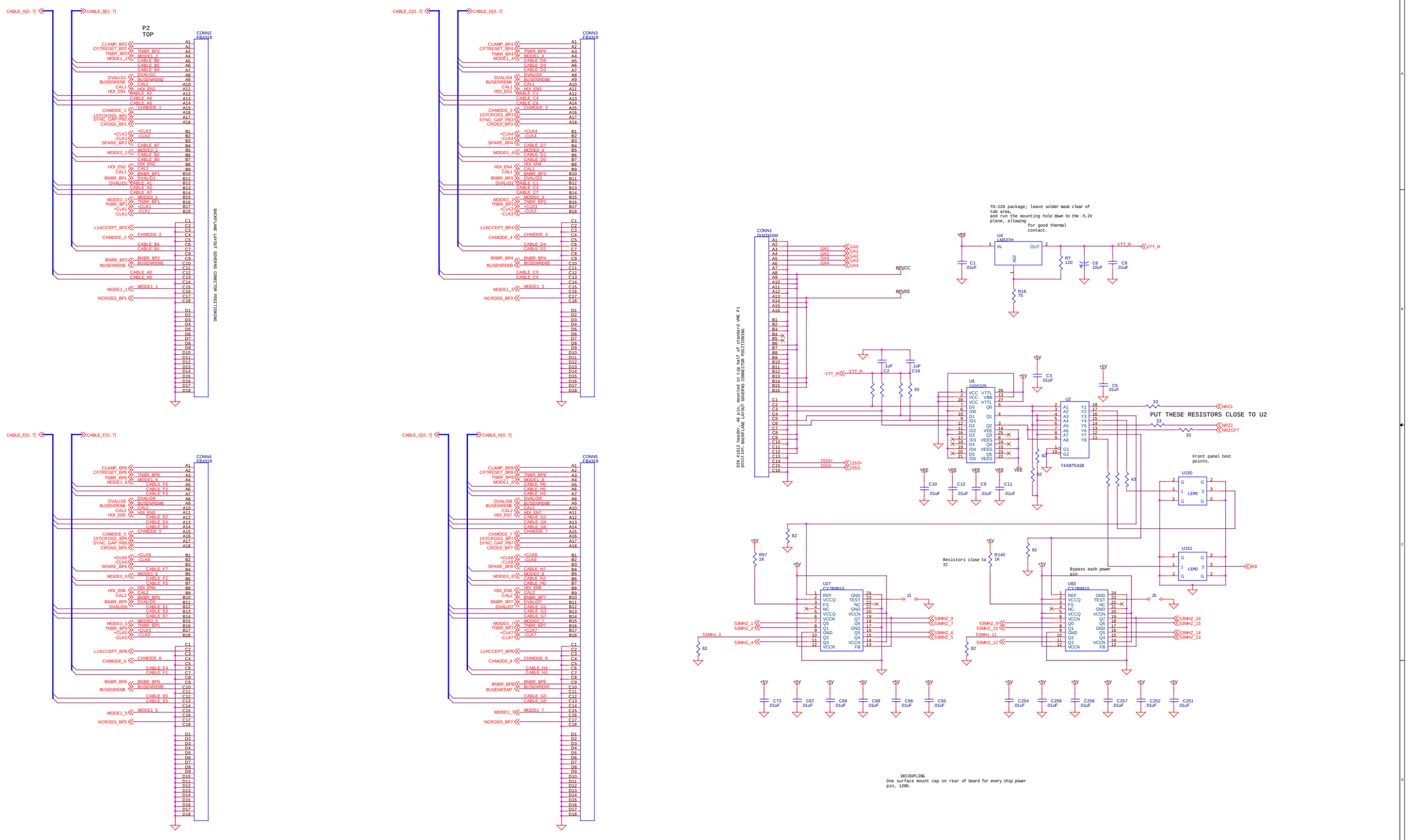

PC.DSN

Title	FNAL
	SVX SEQUENCER (I/O)
Size D	Document Number 3823-112-EC-330169
	Rev -
Date: Monday, June 28, 1999	Sheet 4 of 9

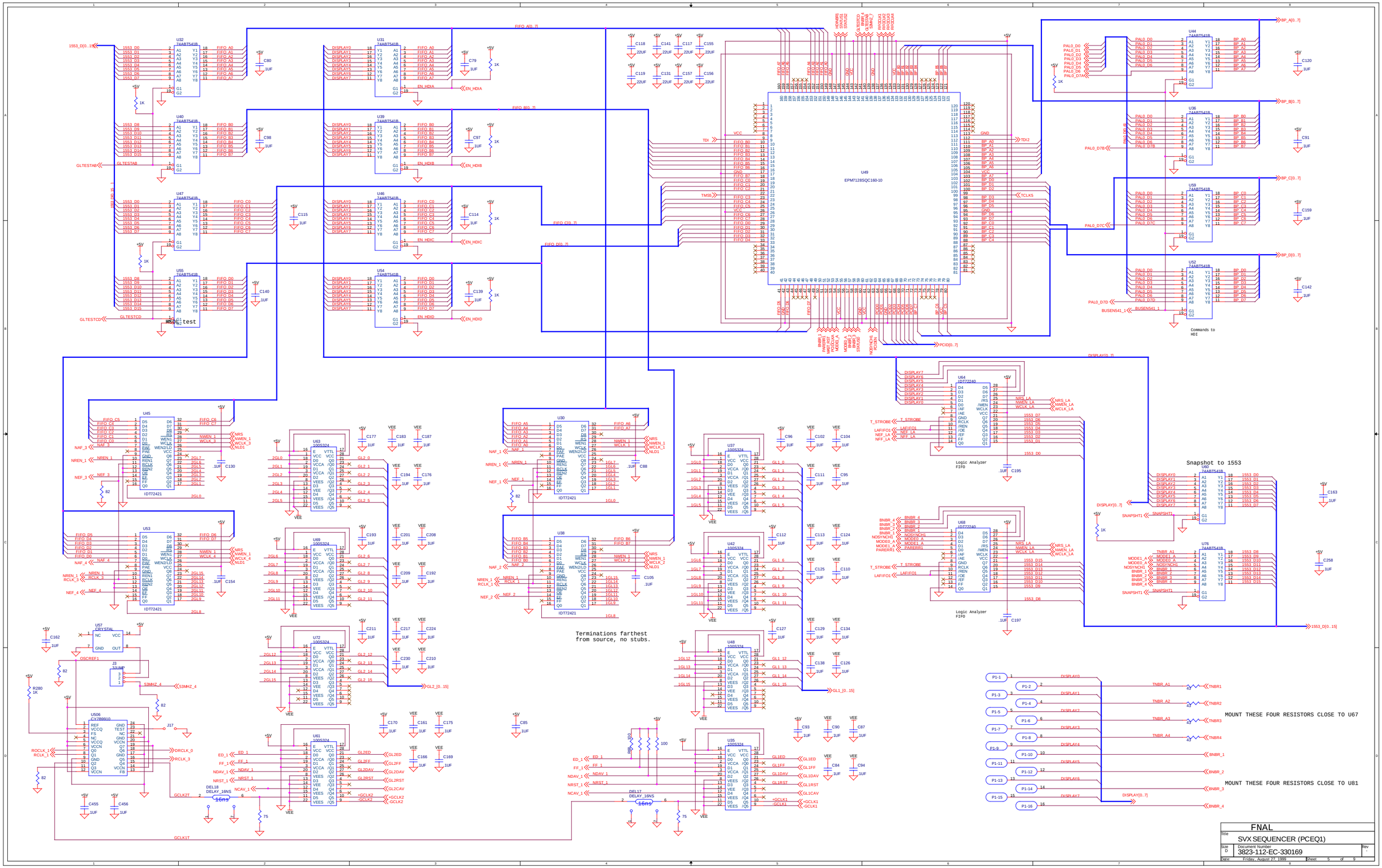
U49
EPM7128SQC160-10
Logic Analyzer FIFO
Snapshot to 1553
Commands to HD2
Terminations farthest from source, no stubs.
MOUNT THESE FOUR RESISTORS CLOSE TO U67
MOUNT THESE FOUR RESISTORS CLOSE TO U81
FNAL
SVX SEQUENCER (PCEQ1)
Document Number
3823-112-EC-330169
Friday, August 27, 1999
Sheet 5 of 9

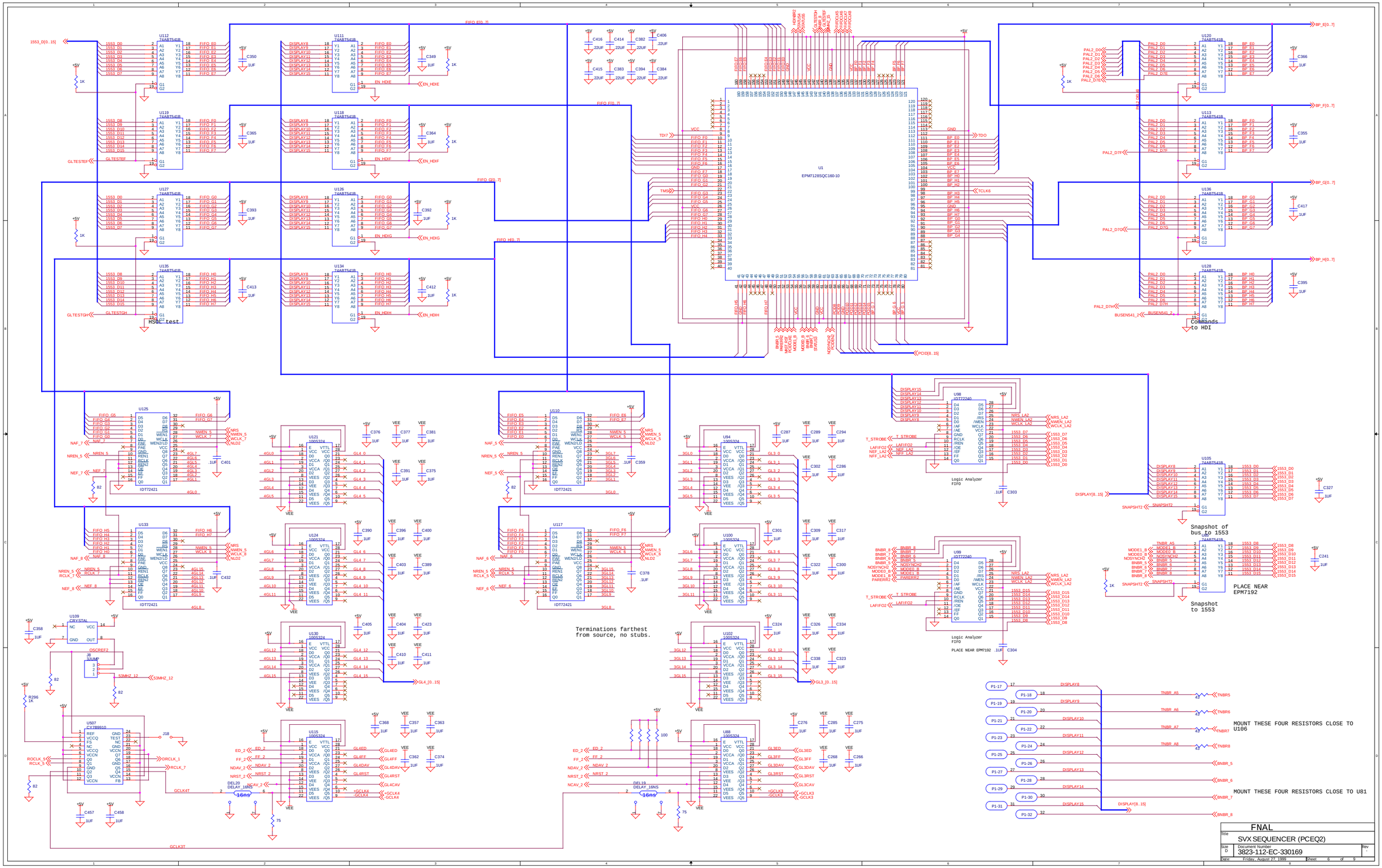
U1
EPM7128SQC160-10
HSDL test
Commands to HDI
Snapshot of bus to 1553
Snapshot to 1553
PLACE NEAR EPM7192
Logic Analyzer FIFO
Terminations farthest from source, no stubs.
MOUNT THESE FOUR RESISTORS CLOSE TO U106
MOUNT THESE FOUR RESISTORS CLOSE TO U81
FNAL
SVX SEQUENCER (PCEQ2)
Document Number
3823-112-EC-330169
Friday, August 27, 1999
Sheet 6 of 9

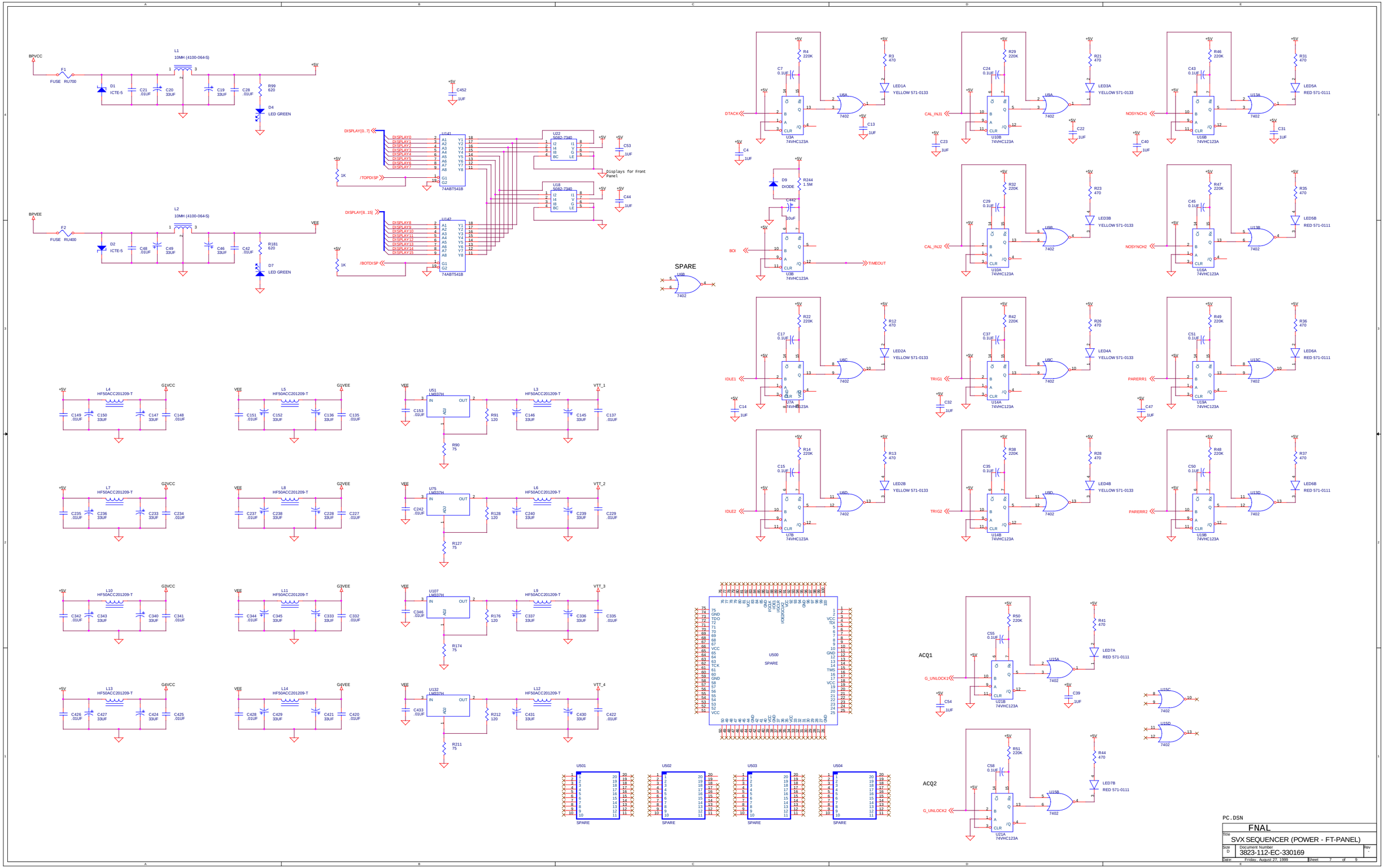
BPVCC
F1
FUSE RU700
L1
10MH (4100-064-S)
D1
ICTE-5
C21 .01UF
C20 33UF
C19 33UF
C28 .01UF
R99 620
D4
LED GREEN
+5V
BPVEE
F2
FUSE RU400
L2
10MH (4100-064-S)
D2
ICTE-5
C48 .01UF
C49 33UF
C46 33UF
C42 .01UF
R181 620
D7
LED GREEN
VEE
C452 1UF
DISPLAY[0..7]
DISPLAY[8..15]
/TOPDISP
/BOTDISP
1K
U141
U142
74ABT541B
U22 5082-7340
U18 5082-7340
C53 1UF
C44 1UF
Displays for Front Panel
SPARE
U6B
7402
L4 HF50ACC201209-T
L5 HF50ACC201209-T
L3 HF50ACC201209-T
L7 HF50ACC201209-T
L8 HF50ACC201209-T
L6 HF50ACC201209-T
L10 HF50ACC201209-T
L11 HF50ACC201209-T
L9 HF50ACC201209-T
L13 HF50ACC201209-T
L14 HF50ACC201209-T
L12 HF50ACC201209-T
G1VCC
G1VEE
G2VCC
G2VEE
G3VCC
G3VEE
G4VCC
G4VEE
VTT_1
VTT_2
VTT_3
VTT_4
U51 LM337H
U75 LM337H
U107 LM337H
U132 LM337H
R91 120
R90 75
R128 120
R127 75
R176 120
R174 75
R212 120
R211 75
DTACK
CAL_INJ1
NOSYNCH1
BOI
TIMEOUT
CAL_INJ2
NOSYNCH2
IDLE1
TRIG1
PARERR1
IDLE2
TRIG2
PARERR2
LED1A YELLOW 571-0133
LED3A YELLOW 571-0133
LED5A RED 571-0111
LED3B YELLOW 571-0133
LED5B RED 571-0111
LED2A YELLOW 571-0133
LED4A YELLOW 571-0133
LED6A RED 571-0111
LED2B YELLOW 571-0133
LED4B YELLOW 571-0133
LED6B RED 571-0111
D9 DIODE
R244 1.5M
C442 10uF
U3A 74VHC123A
U3B 74VHC123A
U10A 74VHC123A
U10B 74VHC123A
U16A 74VHC123A
U16B 74VHC123A
U14A 74VHC123A
U14B 74VHC123A
U19A 74VHC123A
U19B 74VHC123A
U7A 74VHC123A
U7B 74VHC123A
U6A
U6B
U6C
U6D
U9A
U9B
U9C
U9D
U13A
U13B
U13C
U13D
7402
U500
SPARE
U501
U502
U503
U504
ACQ1
ACQ2
G_UNLOCK1
G_UNLOCK2
U21B 74VHC123A
U21A 74VHC123A
U15A
U15B
U15C
U15D
LED7A RED 571-0111
LED7B RED 571-0111
R50 220K
R51 220K
R41 470
R44 470
C55 0.1UF
C58 0.1UF
C54 1UF
C39 .1UF
PC.DSN
FNAL
Title
SVX SEQUENCER (POWER - FT-PANEL)
Size D
Document Number
3823-112-EC-330169
Rev -
Date: Friday, August 27, 1999
Sheet 7 of 9

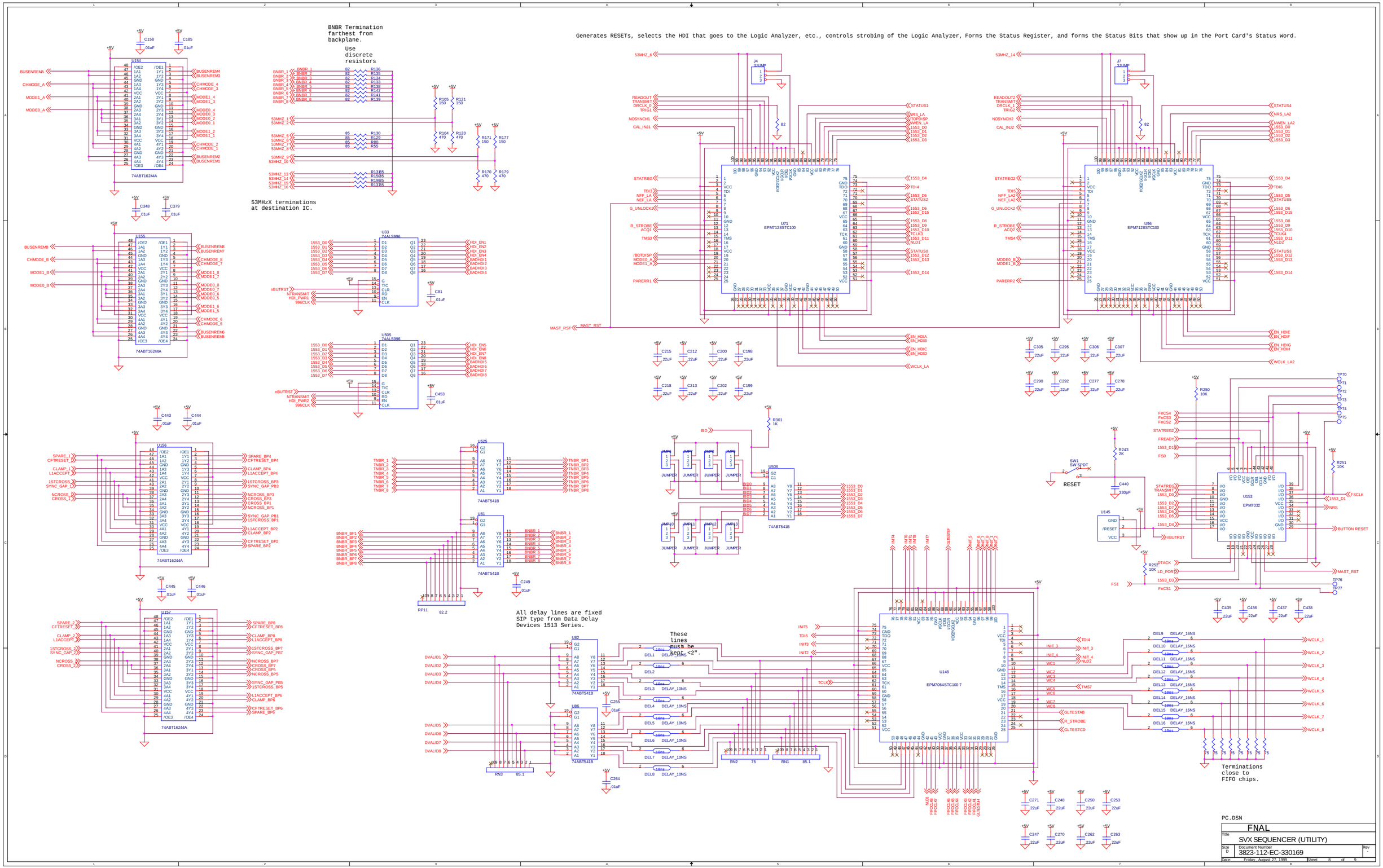
BNBR Termination farthest from backplane.
Use discrete resistors
53MHzX terminations at destination IC.
Generates RESETs, selects the HDI that goes to the Logic Analyzer, etc., controls strobing of the Logic Analyzer, Forms the Status Register, and forms the Status Bits that show up in the Port Card's Status Word.
All delay lines are fixed SIP type from Data Delay Devices 1513 Series.
These lines must be kept <2".
Terminations close to FIFO chips.
U154 74ABT16244A
U155 74ABT16244A
U156 74ABT16244A
U157 74ABT16244A
U33 74ALS996
U505 74ALS996
U525 74ABT541B
U81 74ABT541B
U508 74ABT541B
U82 74ABT541B
U86 74ABT541B
U71 EPM7128STC100
U96 EPM7128STC100
U148 EPM7064STC100-7
U153 EPM7032
RESET
PC.DSN
FNAL
SVX SEQUENCER (UTILITY)
Document Number 3823-112-EC-330169
Friday, August 27, 1999
Sheet 8 of 9

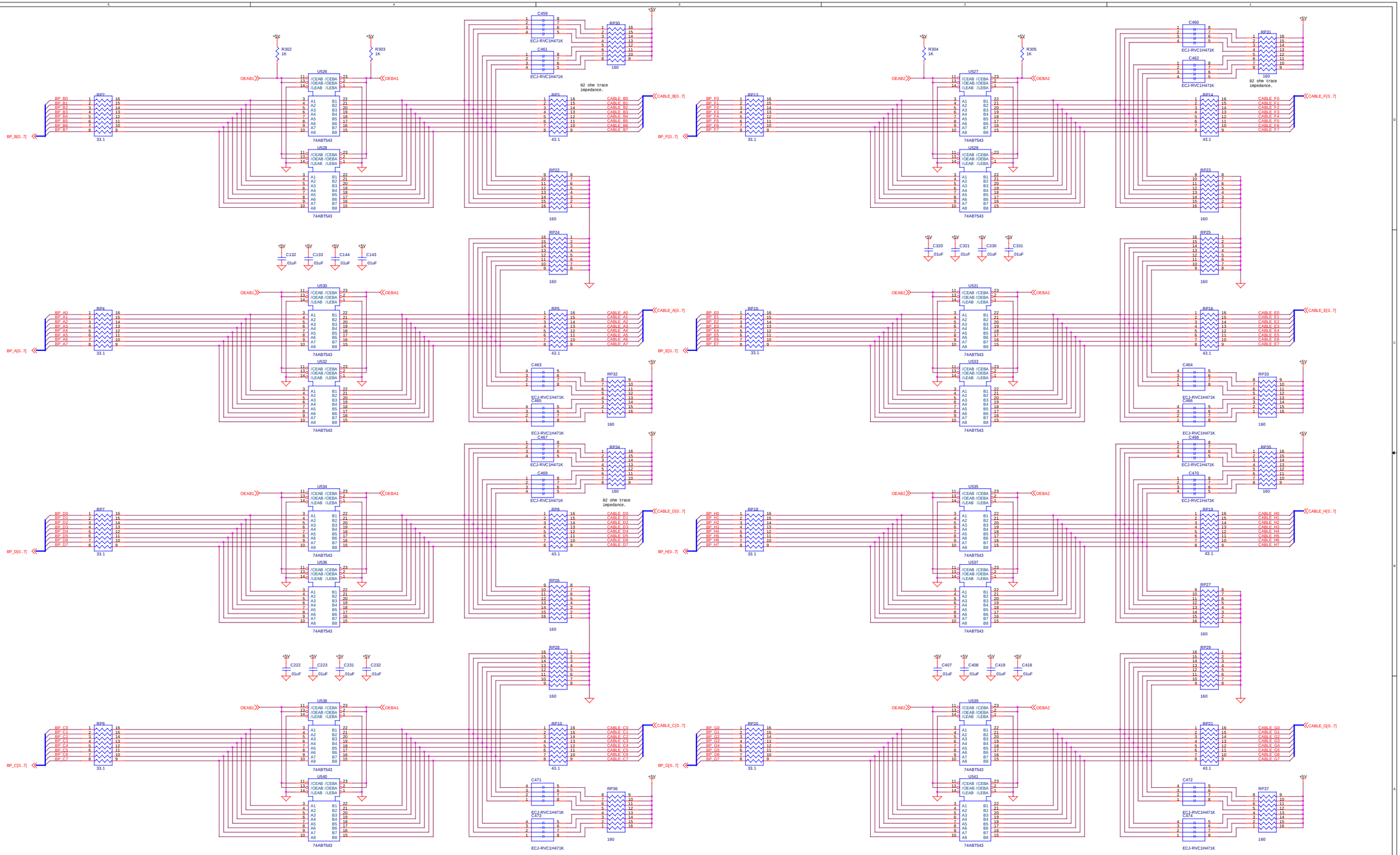

Title	STEREO INTERFACE BOARD
Size D	Document Number <Doc>
Rev	<Rev Code>
Date: Monday, June 28, 1999	Sheet 9 of 9