REV	DESCRIPTION	DRAWN	DATE
		APPROVED	DATE

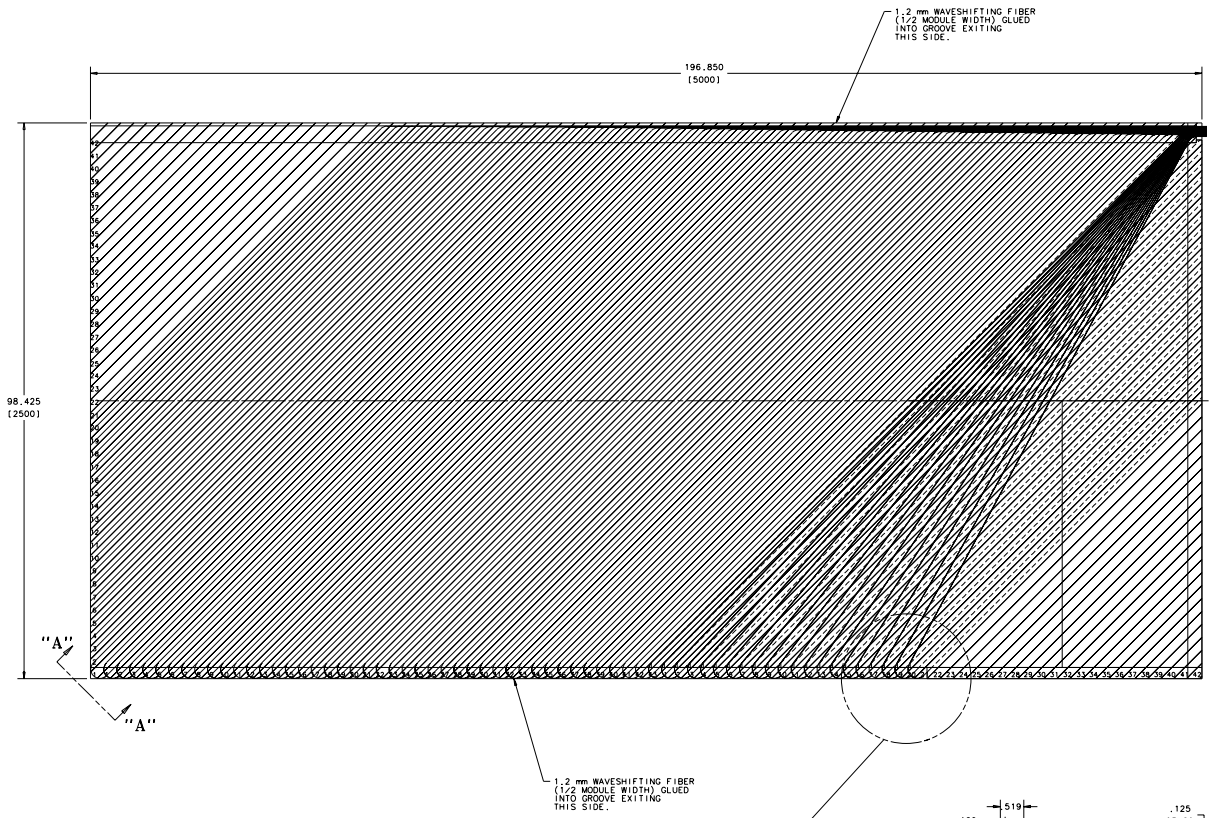

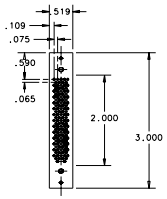

Connector End View

FULL SCALE

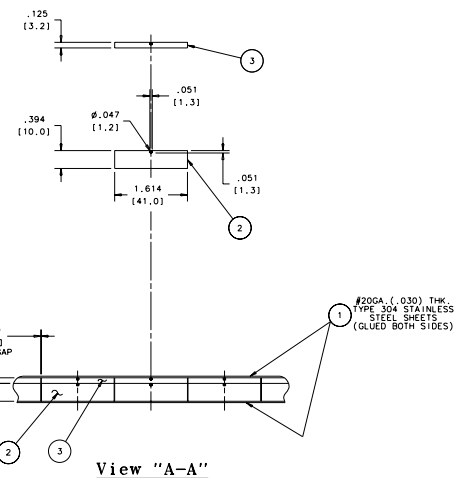

View "A-A"

FULL SCALE

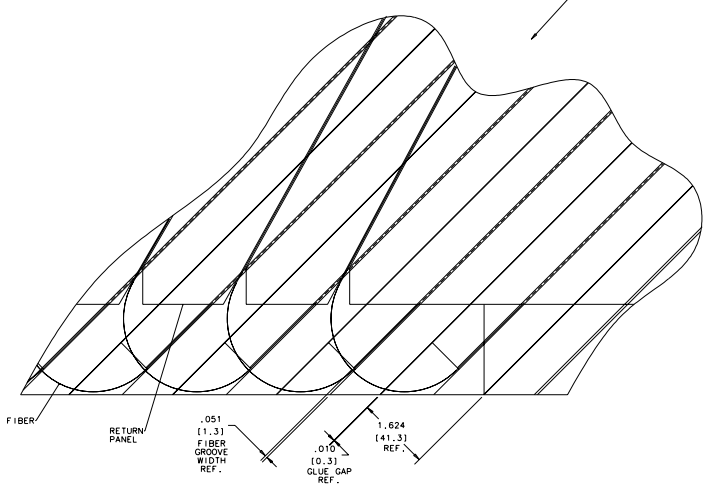

Enlarged View

FULL SCALE

(ALUMINUM COVER SHEET NOT SHOWN)

ITEM	PART NO.	DESCRIPTION OR SIZE	QTY.
3	ME-XXXXXX	1/8 THK. RETURN PANEL	1
2		10mm THK. X 41mm WIDE X 3.6 METERS LG. SCINTILLATOR STRIP	65
1		#20GA.(.030) THK. X 36" W. X 120" LG. TYPE 304 STAINLESS STEEL SHEET	11

PARTS LIST

UNLESS OTHERWISE SPECIFIED			ORIGINATOR	G.FISK	04 JUN 2003
.XX	.XXX	ANGLES	DRAWN	J.MATESKI	04 JUN 2003
±	±	± 1°	CHECKED	K.KREMPETZ	
			APPROVED	G.FISK	
			USED ON		
			MATERIAL		

1. BREAK ALL SHARP EDGES .125
2. DO NOT SCALE DRAWING.
3. DIMENSIONS BASED UPON ANSI Y14.5M-1982
4. ALL DIMENSIONS ARE INCHES
5. MAX. ALL MACH. SURFACES

FERMI NATIONAL ACCELERATOR LABORATORY
UNITED STATES DEPARTMENT OF ENERGY

LINEAR COLLIDER
TEST MODULE
PROTOTYPE

SCALE	DRAWING NUMBER	SHEET	REV
1/8 & NOTED	XXXX.000-ME-XXXXXX	1 OF 1	

CREATED WITH : GROUP: