John T. Anderson

Engineering Note

Date: February 8,1999
Rev Date: February 8, 1999

Project: CFT Axial
Doc. No: A990208A

Subject: Secondary measurements which might be considered using preshower fibers in the CFT detector

Introduction

The preshower fibers in the CFT system are considered important for many energy measurements and some looking ahead to determine what additional information can be gleaned from them is valuable. This note addresses how the geometry of the preshower fibers affects the data seen and what we could do about it as the experiment matures.

General Preshower Geometry

Unlike the axial and stereo fibers the preshower fibers have a triangular cross section as shown in Figure 1. The cross section insures that no energy can 'slip through the cracks' but also introduces measurement problems. The most galling of these is that a given particle track might go through only one preshower fiber (see track 'A'), or it could go through two (see track 'B').

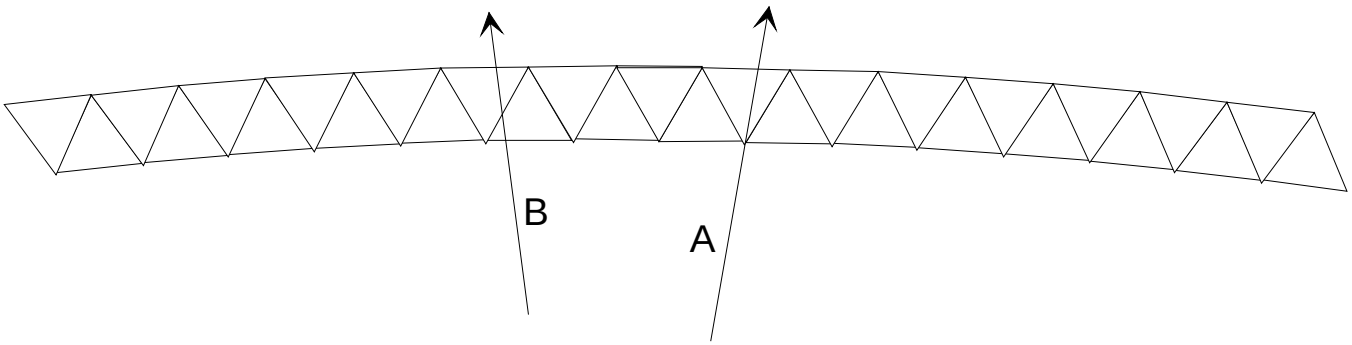

Figure 1

Preshower Combining vs. Cluster Finding

The CFT system provides Cluster Finding capabilities, which finds groups of preshower fibers which have recorded 'hits'. Referrring back to Figure 1, if both 'A' and 'B' represent minimum energy particles, 'A' will be registered as a 'hit' but 'B' may not. At the other end of the energy scale, if both are more than twice as energetic as required, 'A' will still only register a single 'hit' whereas 'B' will now register two – since both fibers have enough energy to 'light up'. Presuming we'd rather see too wide a cluster than no cluster at all, some form of fiber addition may be employed to insure that all clusters are recorded.

A summing junction technique may be employed. Number the fibers from 1 on up as shown in Figure 2.

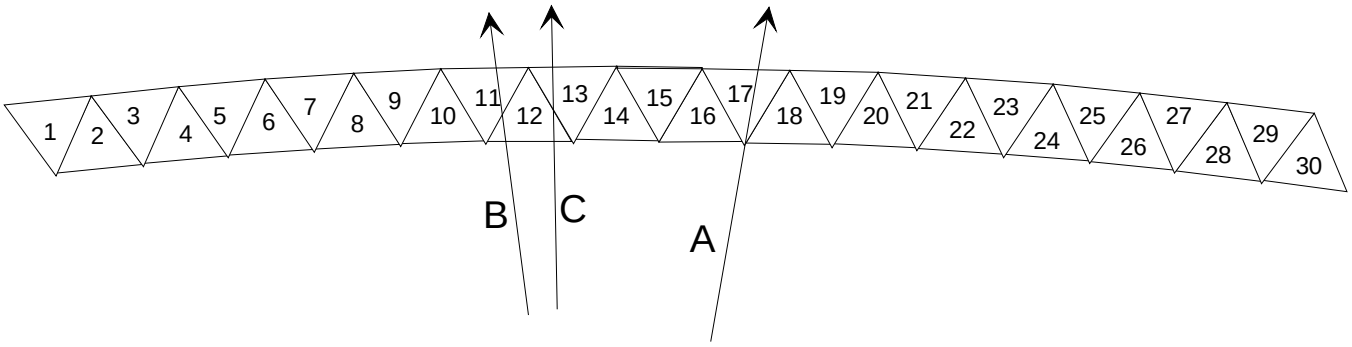

Figure 2

In this picture, either track 'C' or track 'B' should conspire to create a cluster hit in fiber #12. This can be accomplished by the use of a summing junction amplifier as shown in Figure 3. One such summing junction would be required for each triad of preshower fibers – thus, any given CFT front end card would require 32 summing junctions, and this also requires that each board both send and receive two tiny charges with a neighbor board. The sharing is probably not practical, given the noise considerations. However, for cluster matching within a sector, the idea may have merit.

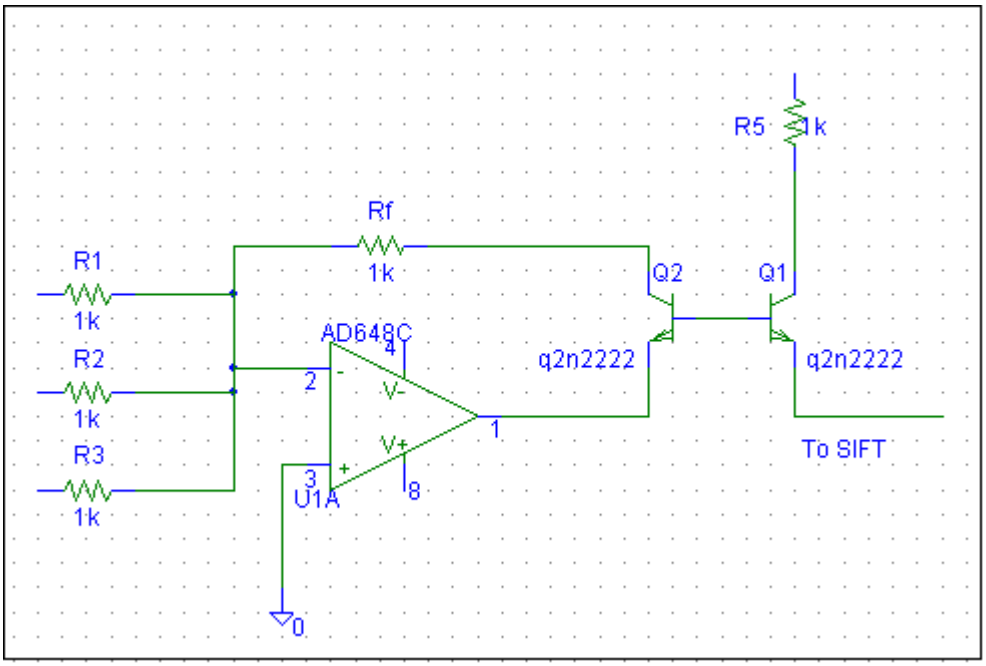

Figure 3

The actual op-amp used would be dependent upon the noise characteristics desired. The AD648 is shown only as one possible choice. Similarly, the 2n2222 is probably not the transistor you'd use, and of course the necessary bias to the shared bases is omitted in this concept sketch. The current through Rf is by definition the sum of the currents flowing in R1 through R3; the current mirror delivers a copy of that current to a SIFT for discrimination. There are, of course, numerous concerns with a circuit like this:

- Given that any fiber 'sees' three different opamps through three resistors, what sort of impedance is provided, and what sort of crosstalk is introduced?
- What errors are introduced by the current mirror?
- What errors are introduced by the op-amp?
- What's the minimum charge that can be reliably measured? Does the split of the charge into three op-amp inputs invalidate the scheme because none of the opamps will react?

Although the idea is interesting, the benefits provided are probably not worth the risk.

Compensation of Discriminator Threshold for Angle of Track

When the beams collide in the detector, by definition only a very few of the collisions recorded will shoot out perpendicular to the beam direction. The larger number go out at some angle to the line of the beams, which changes the length of the path through the preshower fiber, and thus the energy deposited. In addition, the track is also accelerated in the polar coordinate perpendicular to the beam, and the combination of the angles means that the energy deposition in the preshower fiber is not a simple sine function of the angle with respect to the beam direction.

A possible way to compensate for this would be to manipulate the SIFT discriminator threshold during the time inbetween crossings. The rationale is that CFT fibers are relatively long and so the time of arrival of the charge is dependent upon this same angle; particles that cross through the preshower fiber near the end will deliver their charge to the SIFT earlier than those that traverse the middle. If the threshold of the discriminator is varied slightly throughout the crossing, this could provide first-order compensation for the angle effect.

To implement this correction, a small AC waveform would have to be imposed on top of the threshold voltage, and would affect all 18 channels of two SIFTs in each MCM. No attempts to quantify this effect have been made to date, but it is certain that it would require a very fast op-amp and significantly increase the susceptibility of the MCM to noise. At present, this cannot be recommended for the CFT Axial board but is interesting enough to merit some study on the MCM test board.