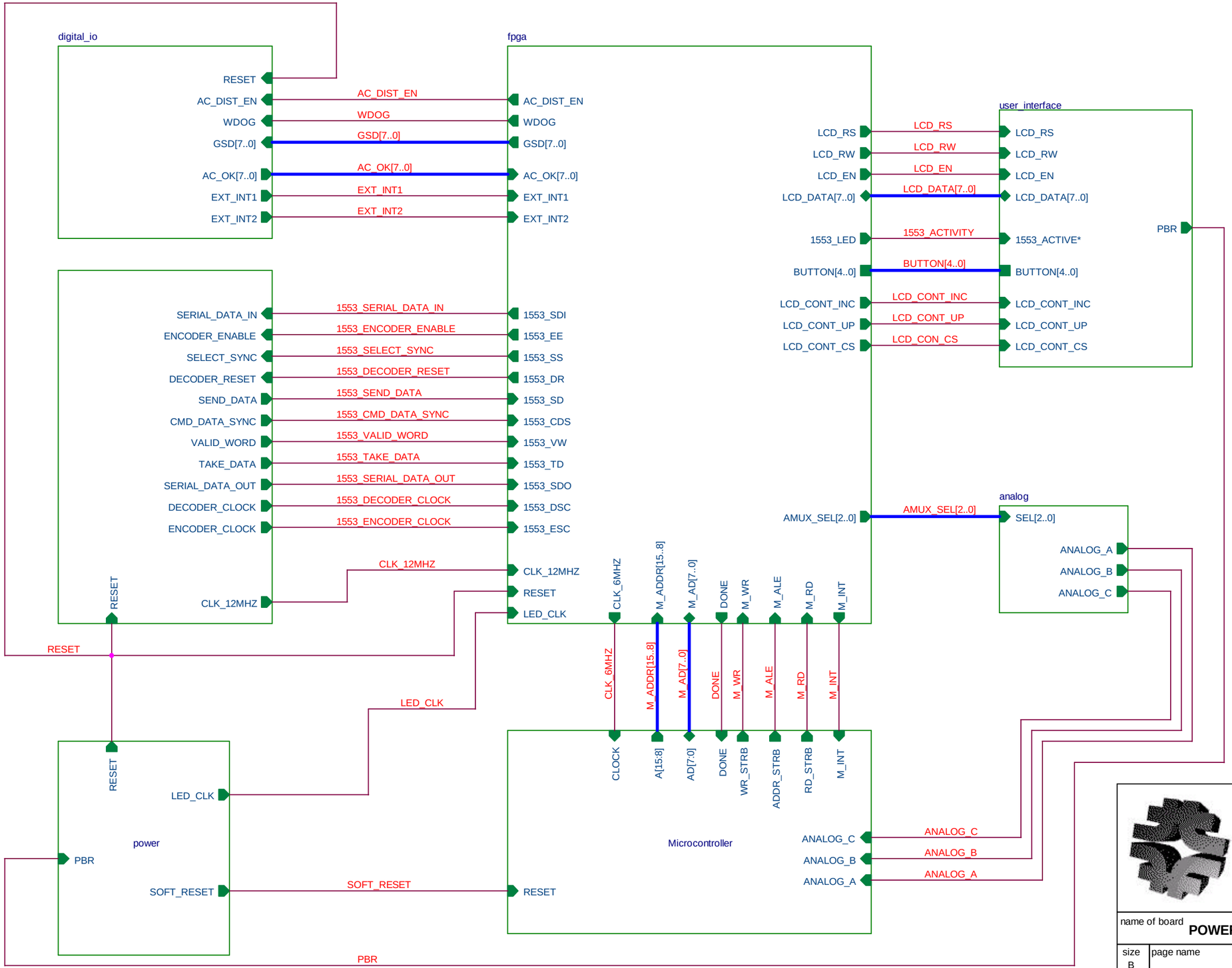

Fermi National Accelerator Laboratory
PPD / E&TT / DZERO upgrade

design by:	Jamieson Olsen
drawn by:	Jamieson Olsen
drawing number	3823-113-ED-330373

name of board: **POWER SUPPLY MONITOR/CONTROL BOARD**

size	page name	revision
B	**top level**	A

Date: Wednesday, November 28, 2001 Sheet 1 of 8

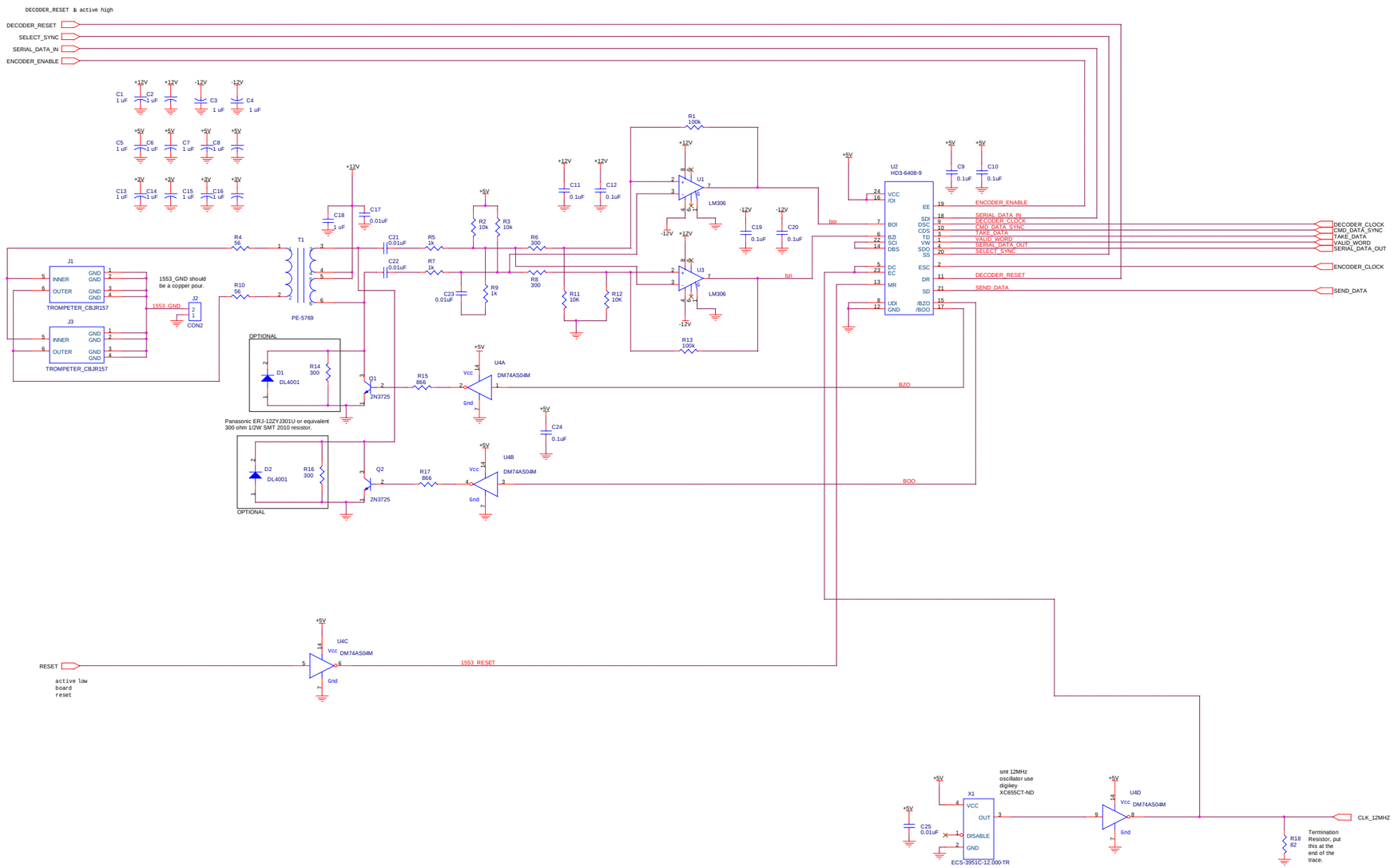

Fermi National Accelerator Laboratory
PPD / E&TT / DZERO upgrade

design by:	Jamieson Olsen
drawn by:	Jamieson Olsen
drawing number	3823-113-ED-330373
name of board	POWER SUPPLY MONITOR/CONTROL BOARD
size D	page name 1553 Inteface
revision A	
Date: Monday, November 26, 2001	Sheet 2 of 8

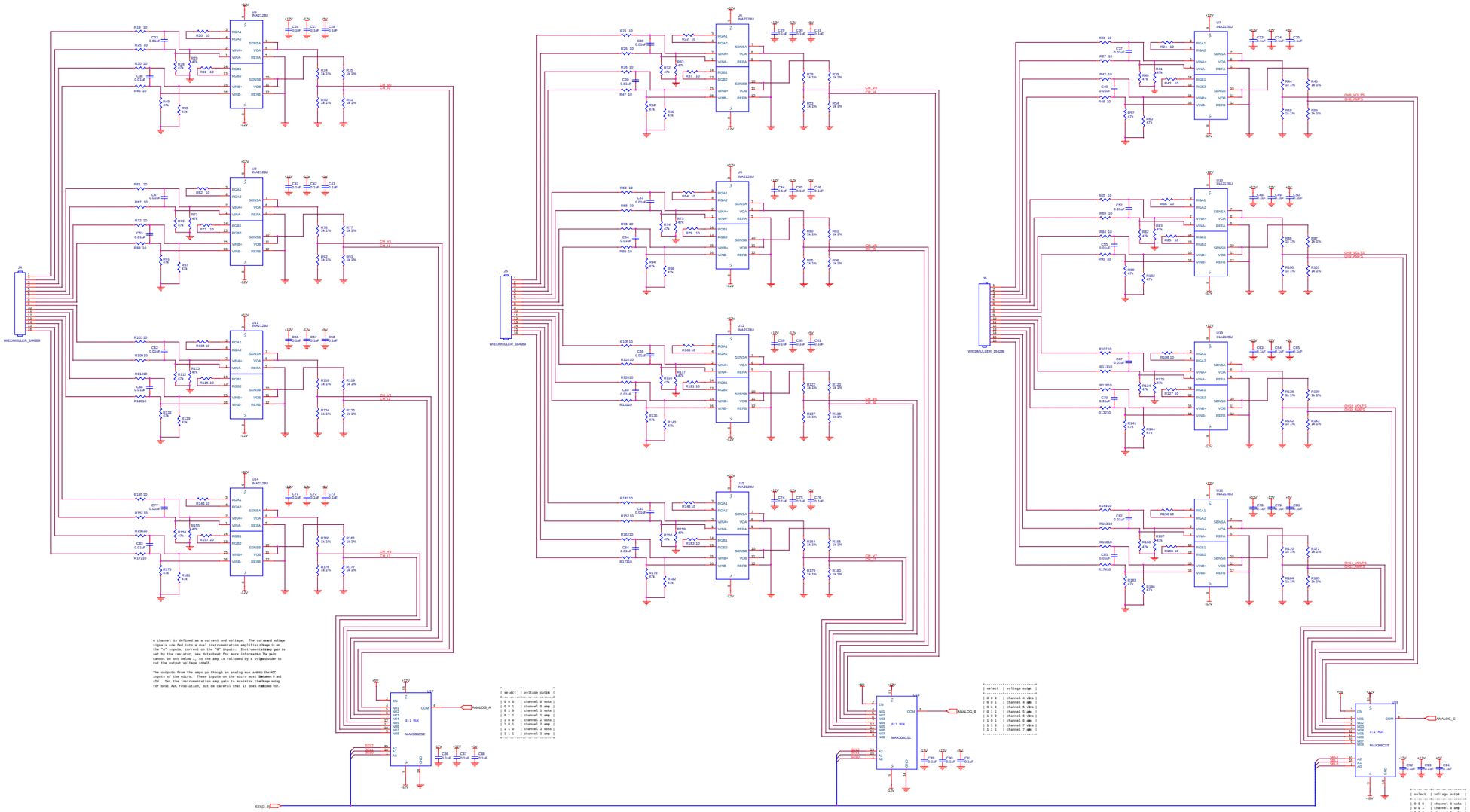

A channel is defined as a current and voltage. The current and voltage signals are fed into a dual instrumentation amplifier. The voltage is on the inverting input and the current is on the non-inverting input. The gain is set by the resistor, see datasheet for more details. The voltage cannot be set below 1, so the amp is followed by a voltage divider to cut the output voltage in half.

The outputs from the amps go though an analog mux and into the ADC inputs of the micro. These inputs on the micro must be between 0 and +5V. Set the instrumentation amp gain to maximize the voltage swing for best ADC resolution, but be careful that it does not exceed +5V.

select	voltage output
0 0 0	channel 0 volts
0 0 1	channel 0 amp
0 1 0	channel 1 volts
0 1 1	channel 1 amp
1 0 0	channel 2 volts
1 0 1	channel 2 amp
1 1 0	channel 3 volts
1 1 1	channel 3 amp

select	voltage output
0 0 0	channel 4 volts
0 0 1	channel 4 amp
0 1 0	channel 5 volts
0 1 1	channel 5 amp
1 0 0	channel 6 volts
1 0 1	channel 6 amp
1 1 0	channel 7 volts
1 1 1	channel 7 amp

select	voltage output
0 0 0	channel 8 volts
0 0 1	channel 8 amp
0 1 0	channel 9 volts
0 1 1	channel 9 amp
1 0 0	channel 10 volts
1 0 1	channel 10 amp
1 1 0	channel 11 volts
1 1 1	channel 11 amp

Fermi National Accelerator Laboratory
PPD / E&TT / DZERO upgrade

Design by:	Jameson Olsen
Drawn by:	Jameson Olsen
Drawing number	3823-113-ED-338373
name of board	POWER SUPPLY MONITOR/CONTROL BOARD
size: E / page name:	Analog Mux and Instrumentation Amps
revision:	A
date:	Monday, November 26, 2018
sheet	3 of 8

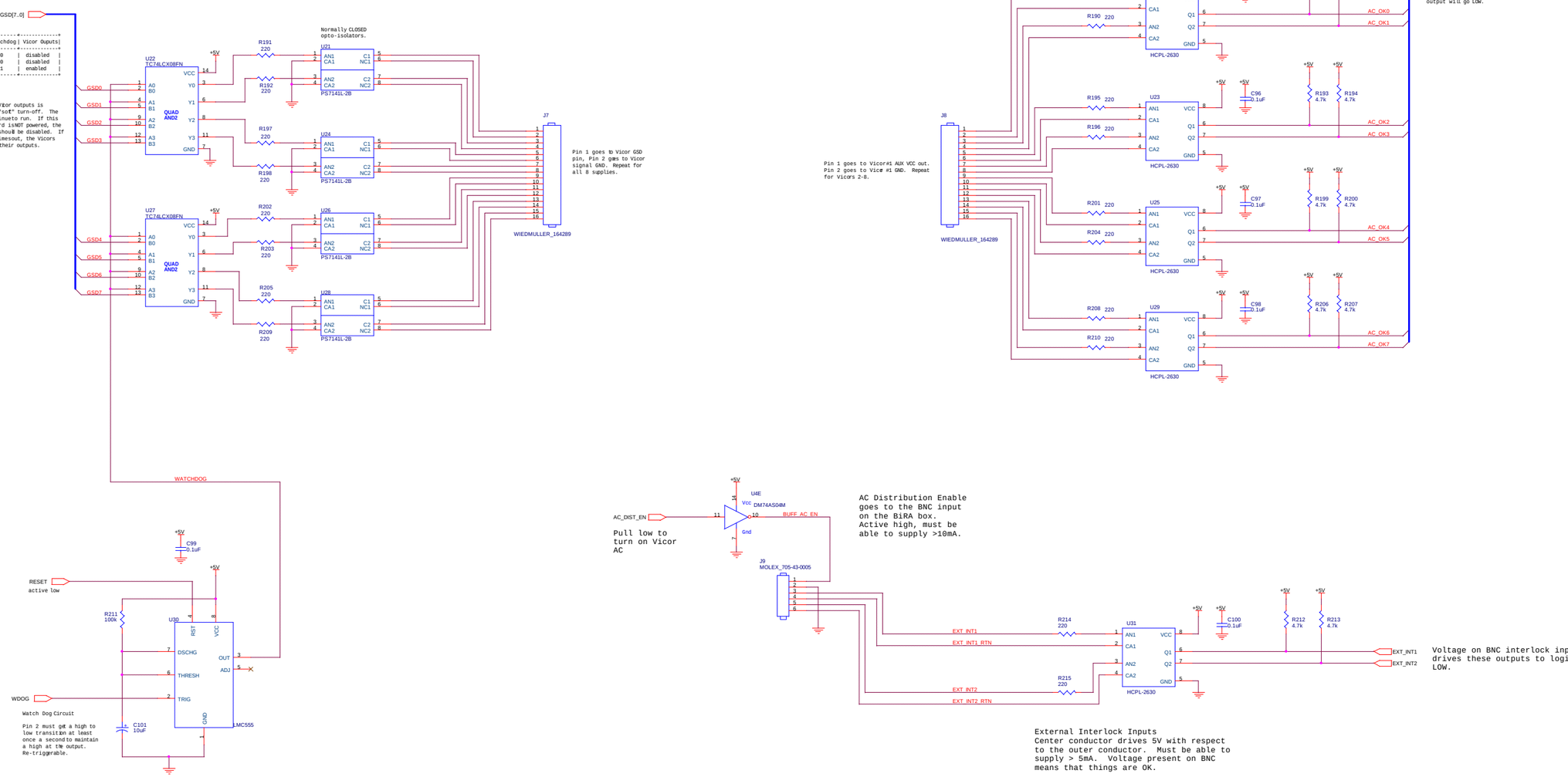

Fermi National Accelerator Laboratory PPD / E&TT / DZERO upgrade	
design by:	Jamieson Olsen
drawn by:	Jamieson Olsen
drawing number	3823-113-ED-330373
name of board	POWER SUPPLY MONITOR/CONTROL BOARD
size D / page name	DIGITAL IO CONNECTORS / revision A
Date: Monday, November 26, 2001	Sheet 4 of 6

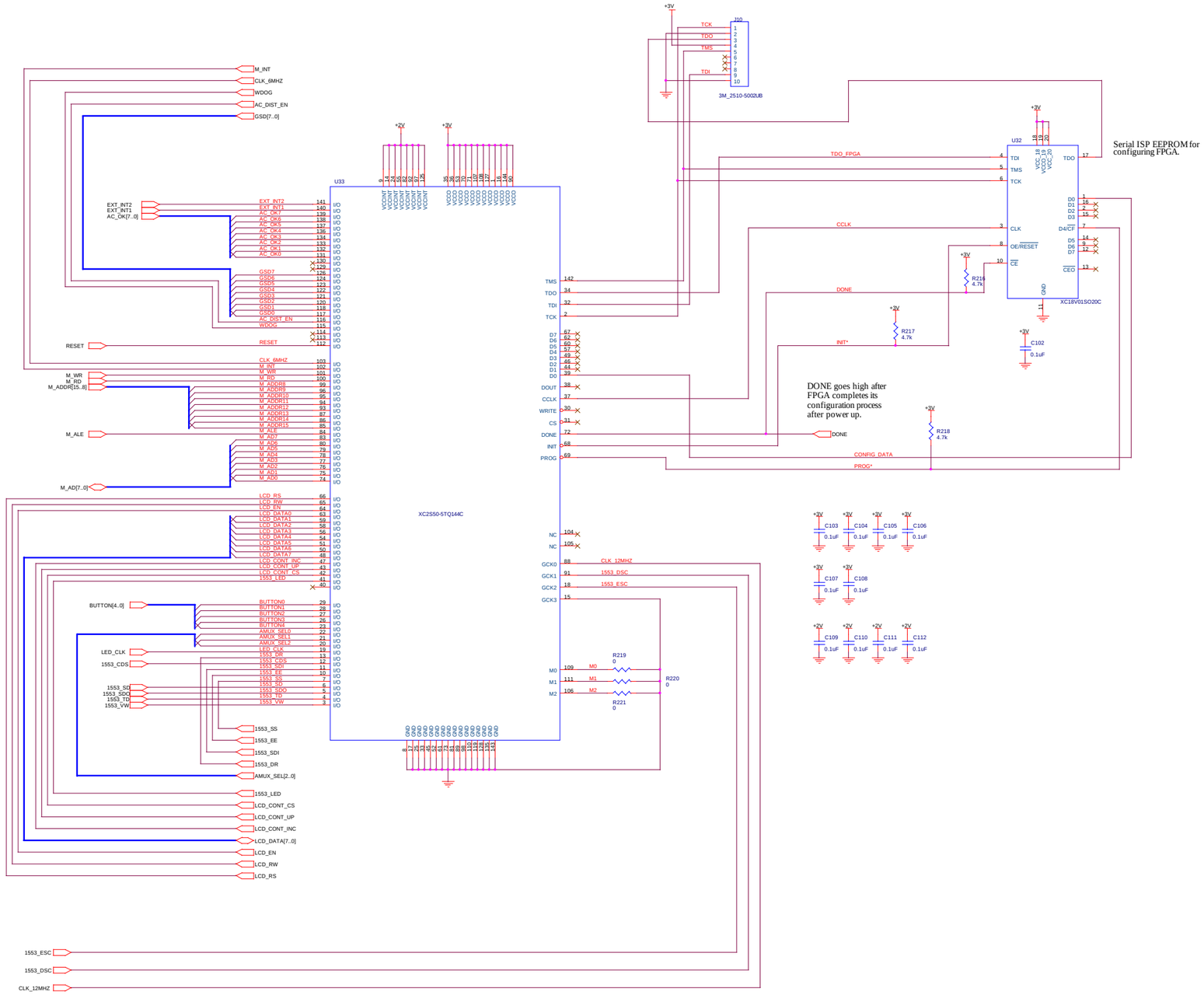

Fermi National Accelerator Laboratory
PPD / E&TT / DZERO upgrade

design by:	Jamieson Olsen
drawn by:	Jamieson Olsen
drawing number	3823-113-ED-330373
name of board	POWER SUPPLY MONITOR/CONTROL BOARD
size D	page name: FPGA glue logic
revision	A
Date:	Wednesday, November 28, 2001
Sheet	5 of 8

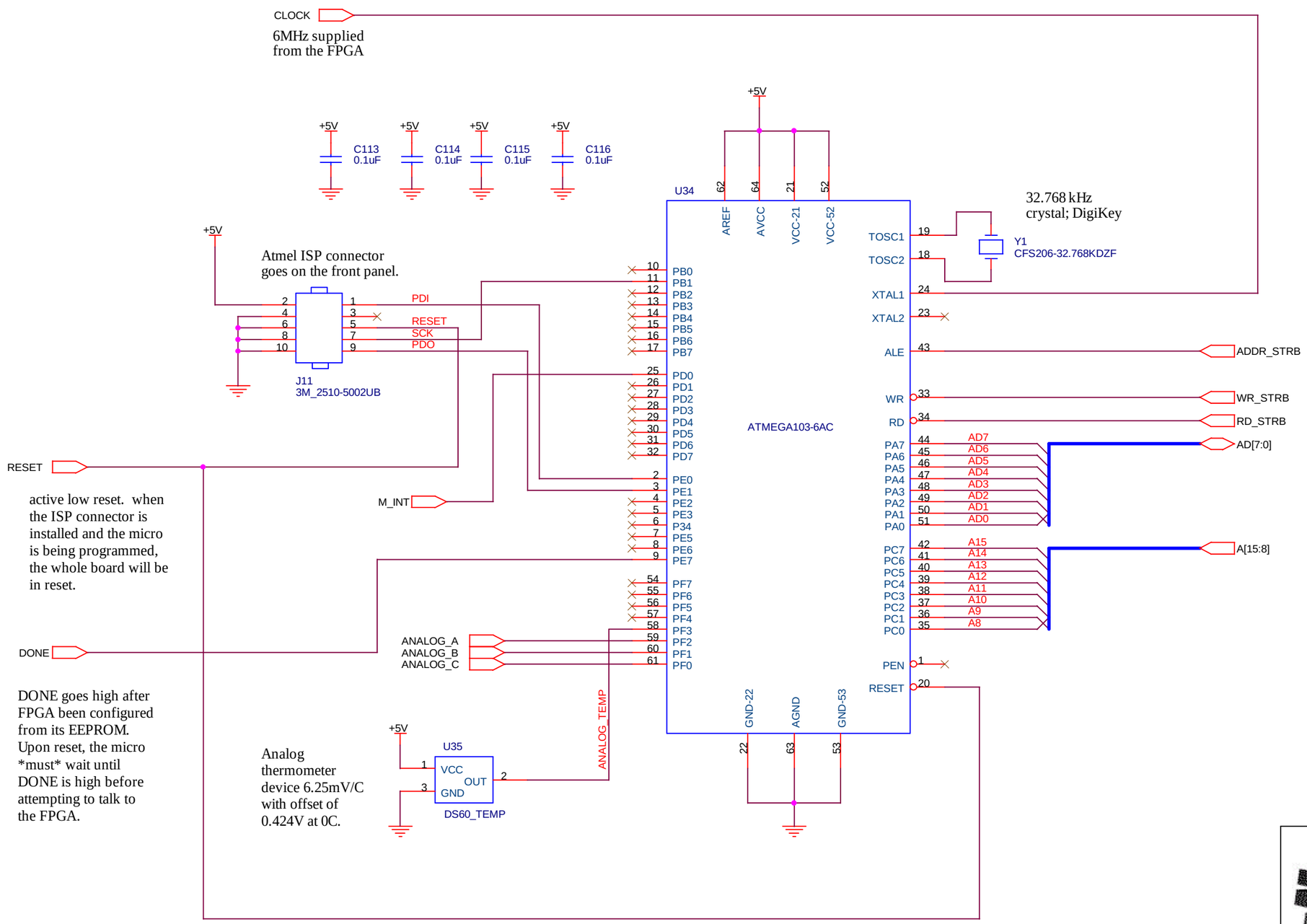

active low reset. when the ISP connector is installed and the micro is being programmed, the whole board will be in reset.

DONE goes high after FPGA been configured from its EEPROM. Upon reset, the micro *must* wait until DONE is high before attempting to talk to the FPGA.

Analog thermometer device 6.25mV/C with offset of 0.424V at 0C.

Multiplexed async data bus 16 bit address / 8 bit data used to talk to external ram, which in this case is the FPGA. It is through this interface that the micro talks to all of the peripherals on the board.

Fermi National Accelerator Laboratory
PPD / E&TT / DZERO upgrade

design by:	Jamieson Olsen
drawn by:	Jamieson Olsen
drawing number	3823-113-ED-330373
name of board	**POWER SUPPLY MONITOR/CONTROL BOARD**
size B	page name **Microcontroller**	revision A

Date: Wednesday, November 28, 2001 Sheet 6 of 8

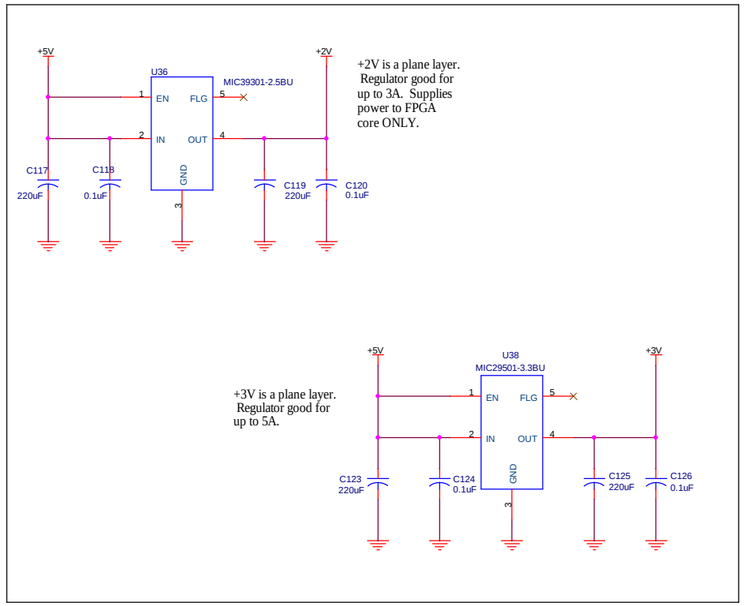

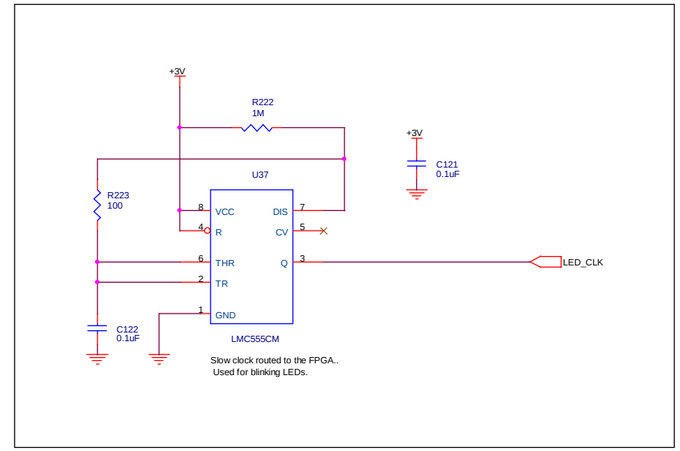

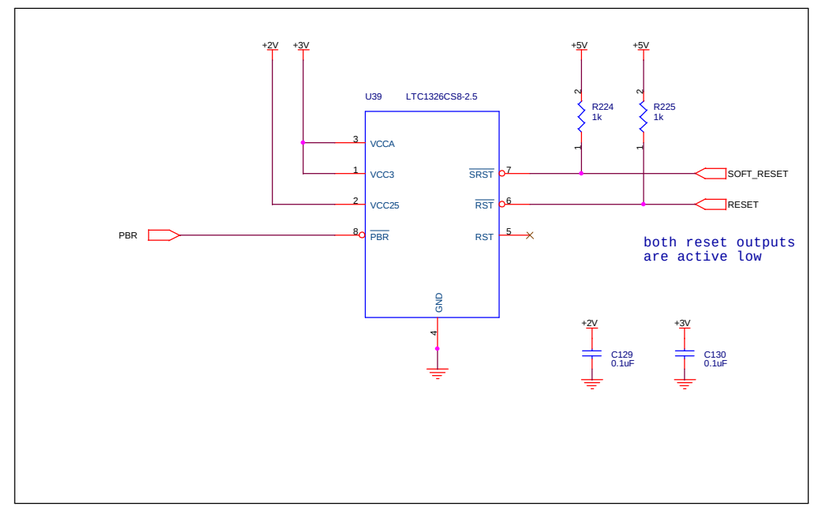

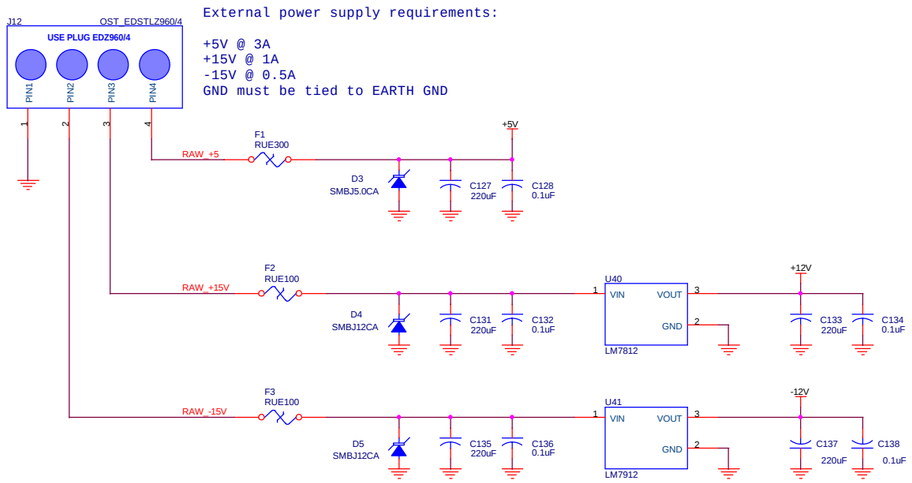

External power supply requirements:

+5V @ 3A
+15V @ 1A
-15V @ 0.5A
GND must be tied to EARTH GND

Fermi National Accelerator Laboratory PPD / E&TT / DZERO upgrade		
design by:	Jamieson Olsen	
drawn by:	Jamieson Olsen	
drawing number	3823-113-ED-330373	
name of board	POWER SUPPLY MONITOR/CONTROL BOARD	
size C	page name POWER SUPPLY	revision A
Date: Monday, November 26, 2001	Sheet 7 of 8	

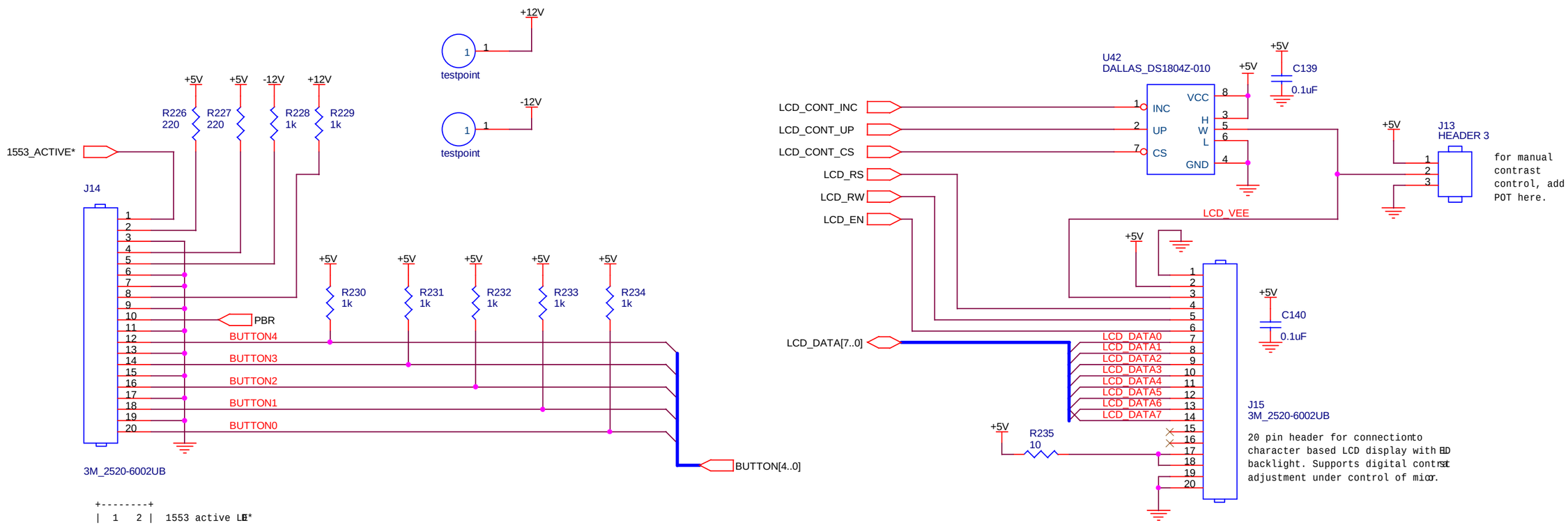


```
+--------+
|  1   2 |  1553 active LED*
|  3   4 |  +5V power LED*
|  5   6 |  -12V power LED*
|  7   8 |  +12V power LED*
|  9  10 |  RESET pushbutton
| 11  12 |  REMOTE/LOCAL switch
| 13  14 |  SHUTDOWN ALL switch
| 15  16 |  MENU2 pushbutton
| 17  18 |  MENU1 pushbutton
| 19  20 |  MENU0 pushbutton
+--------+

* all LEDs have CATHODE on ODD numbered pins
```

Fermi National Accelerator Laboratory
PPD / E&TT / DZERO upgrade

design by:	Jamieson Olsen
drawn by:	Jamieson Olsen
drawing number	3823-113-ED-330373
name of board	**POWER SUPPLY MONITOR/CONTROL BOARD**
size B	page name **USER INTERFACE**
revision	A
Date:	Monday, November 26, 2001
Sheet	8 of 8