PLANE 1 TOP SIDE LEGEND TOP SIDE

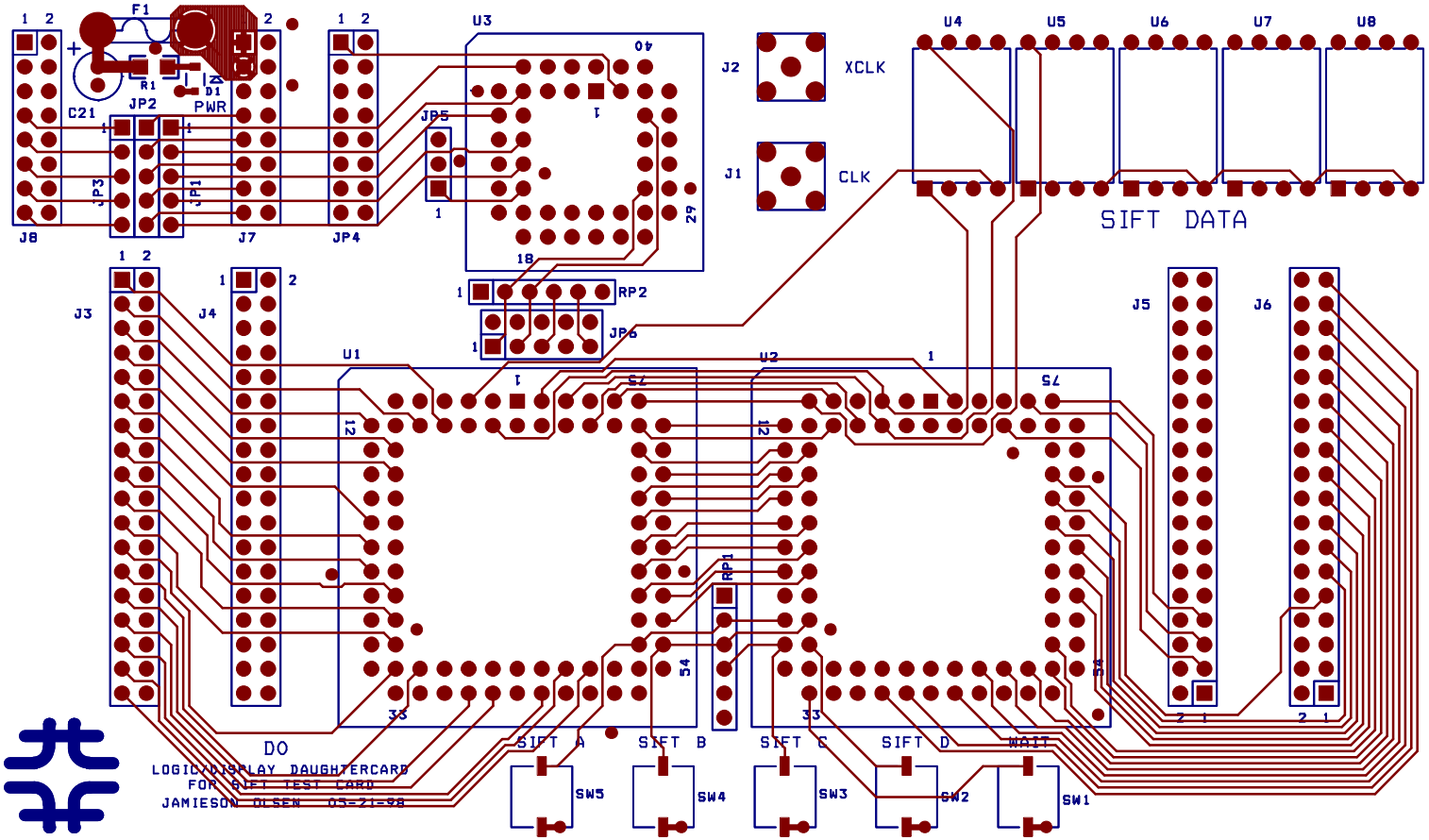

PLANE 2 GROUND

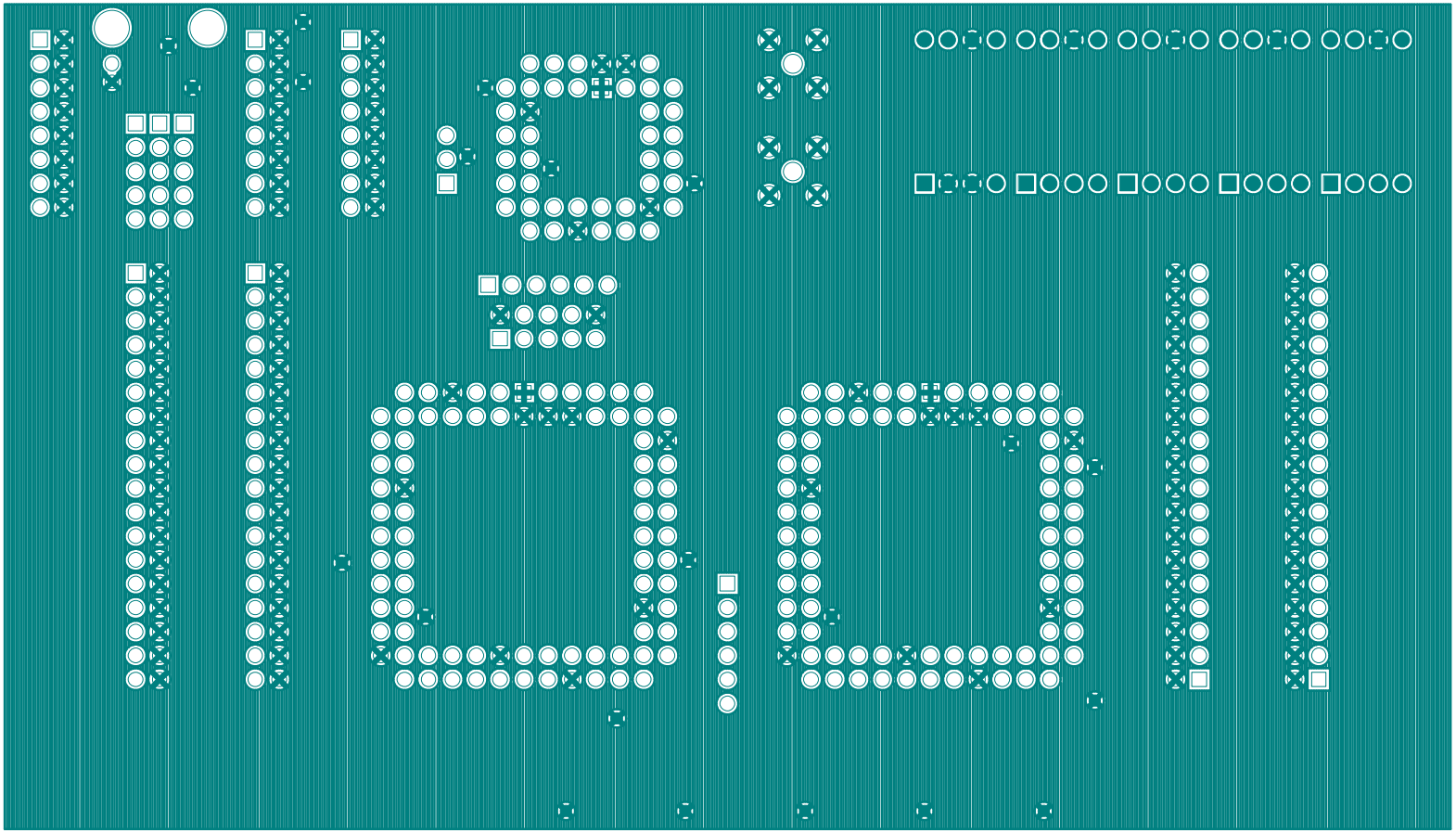

PLANE 3 POWER

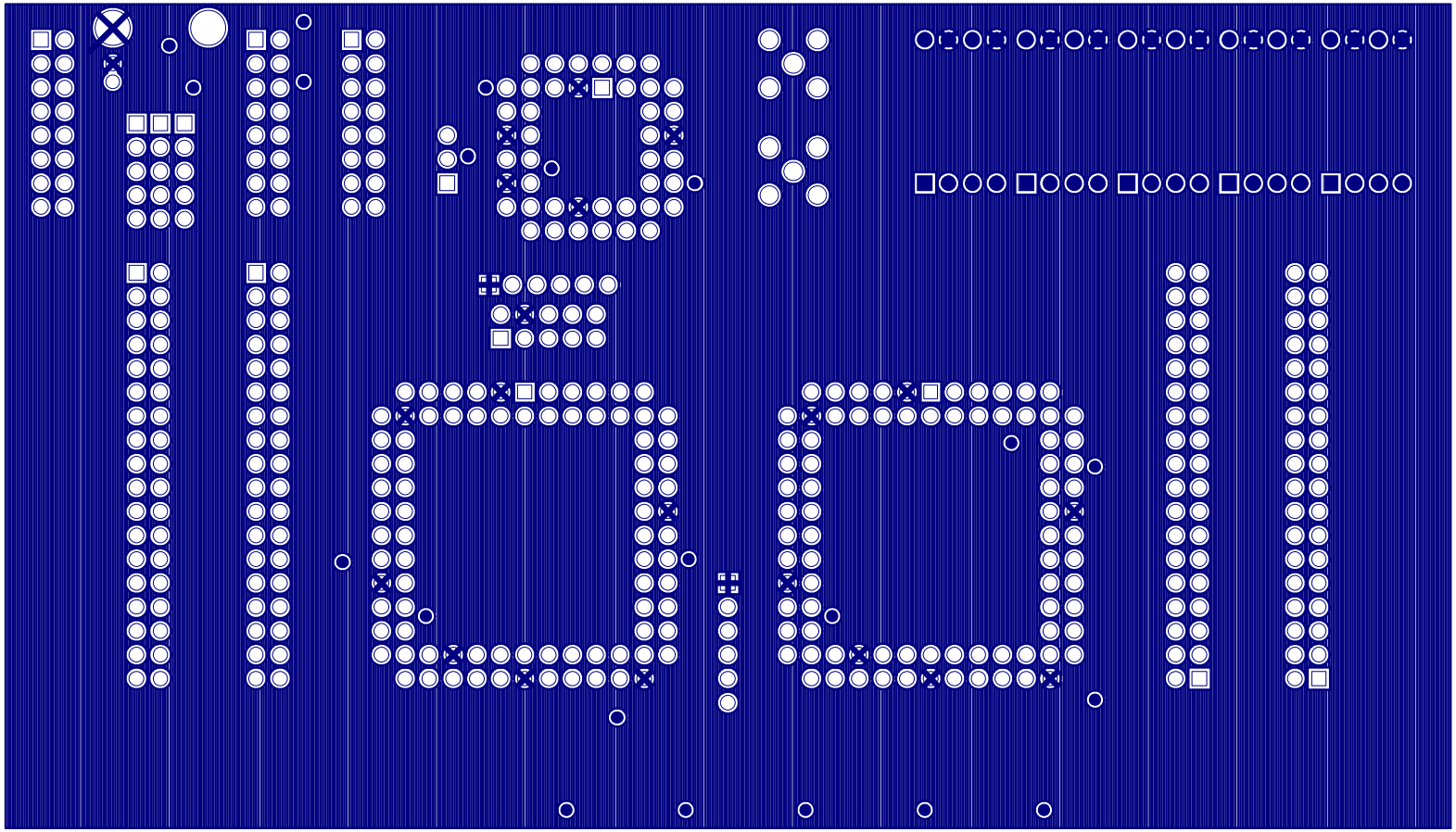
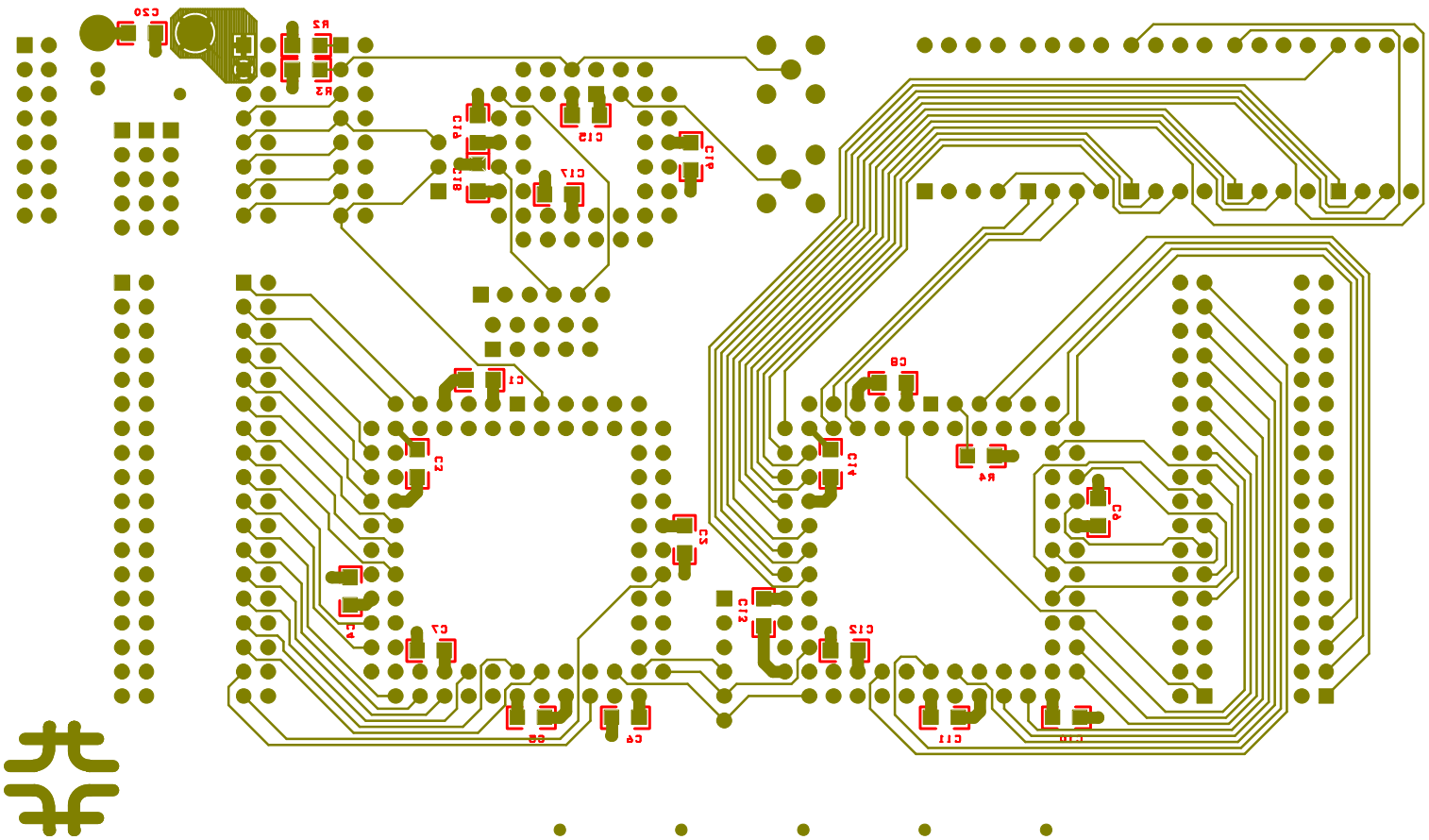
PLANE 4 BOTTOM SIDE LEGEND BOTTOM SIDE