John Foglesong

Engineering Note

Date: August 6, 2002
Rev Date: October 23, 2002

Project: **SMT DC Power Distribution for Run 2B**
Doc. No: JF20020806

Subject: **Relocation of SMT DC Power Supplies**

The present location of the SMT DC Power Supply Units creates a problem whenever a power unit needs to be serviced or replaced. The problem being that the iron must be opened to permit access to the Power Units.

The following proposal is being make to solve this problem:

1) Relocate the Power Supplies on first floor of Movable Counting House so that service and or replacement can be done at any time.
2) Find a Commercial Power Supply to supply SMT DC power.
3) Redesign fuse panel for better reliability.
4) Use remote sensing at present fuse panel locations.
5) Route wiring from Power Supply Units across cable bridge up North end to cathedral areas on East and West sides to new fuse panels.
6) Provide Can Bus interface
    a) PC
    b) Network Interface Card (Can Bus card)
    c) Network Interface Card (Ethernet card)
    d) Lab View Software
    e) Lab View / Epics Software

This is a working proposal. It will probably change as it is developed.

Item 1:

My first thoughts are to locate the Power Units inside the Movable Counting House on the first floor. The relay rack layout is shown below.

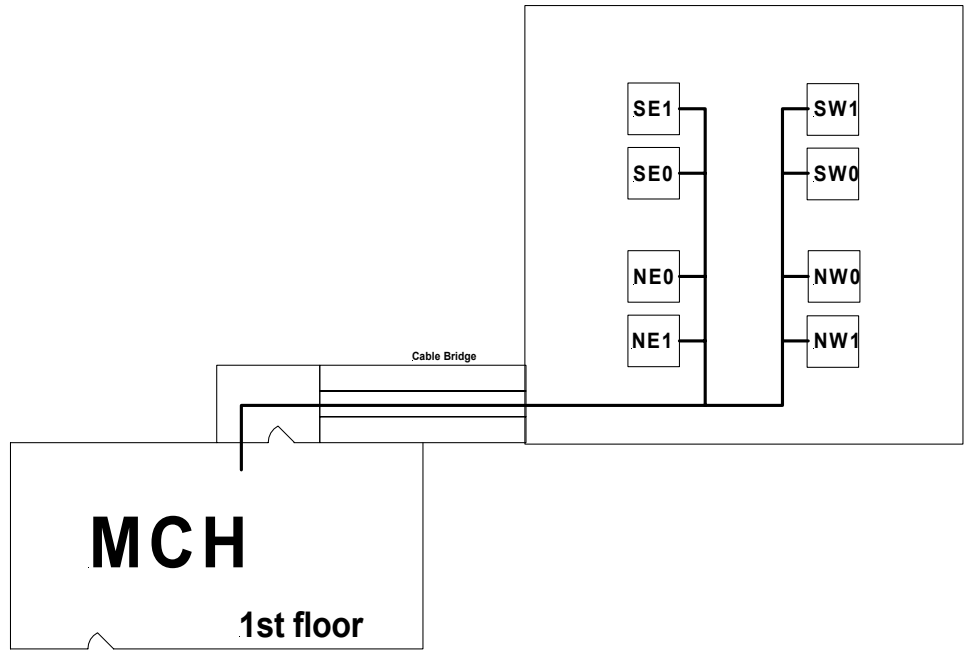

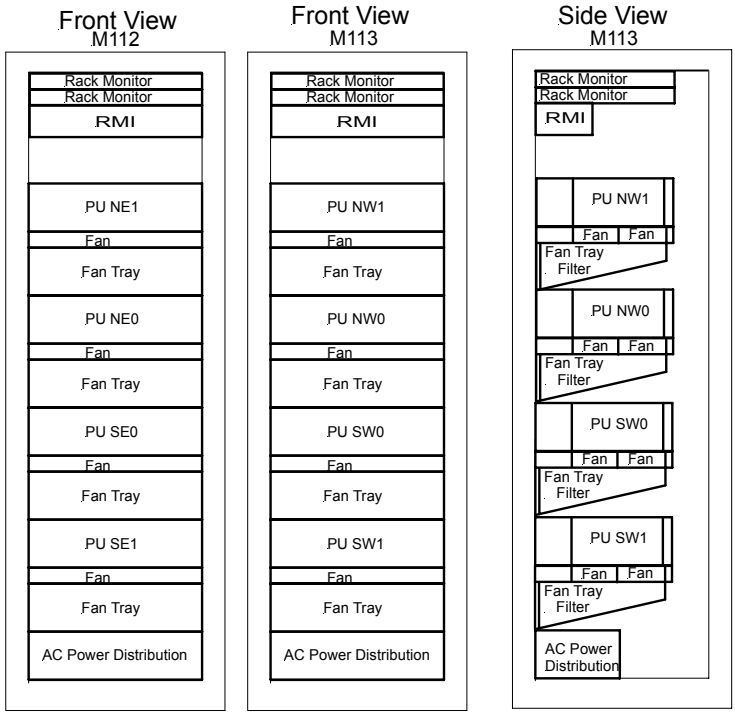

Interface Crate 0 Power Required

Power Supply Number	Voltage Needed volts	Current Needed ma	Current Needed amps	Cards Slots Fed
1	5.25		24.50	2, 3, 4, 5, 6, 7 and 8
2	5.25		21.00	9, 10, 12, 13, 14, and 15
3	5.25		17.50	16, 17, 18, 19, and 20
4	15.1		4.50	2, 3, 4, 5, 6, 7, 8, 9, 10, 12, 13, 14, 15, 16, 17, 18, 19, and 20
5	2.75	5640	5.64	2, 3, 12, and 13
6	2.75	10640	10.64	4, 6, 14, and 16
7	2.75	22000	22.00	7, 8, and 9
8	2.75	22000	22.00	17, 18, and 19
9	2.75	17600	17.60	5 and 10
10	2.75	17600	17.60	15 and 20

				PL 500 Power unit	Suggestions
1-3	5.25		63.00	4-10V	85A
4	15.1		4.50	12-30V	23A
5 and 6	2.75		16.28	2-7V	20A
7 and 8	2.75		44.00	2-7V	115A
9 and10	2.75		35.20	2-7V	115A

Interface Crate 1 Power Required

Power Supply Number	Voltage Needed volts	Current Needed ma	Current Needed amps	Cards Slots Fed
1	5.25		24.50	2, 3, 4, 5, 6, 7 and 8
2	5.25		21.00	9, 10, 12, 13, 14, and 15
3	5.25		17.50	16, 17, 18, 19, and 20
4	15.1		4.50	2, 3, 4, 5, 6, 7, 8, 9, 10, 12, 13, 14, 15, 16, 17, 18, 19, and 20
5	2.75	2820	2.82	2 and 3
6	2.75	5320	5.32	4 and 6
7	2.75	26400	26.40	5, 7, and 10
8	2.75	33000	33.00	14, 17, and 20
9	2.75	26400	26.40	8, 9, 12, and 13
10	2.75	26400	26.40	15, 16, 18, and 19

				PL 500 Power unit	Suggestions
1-3	5.25		63.00	4-10V	85A
4	15.1		4.50	12-30V	23A
5 and 6	2.75		8.14	2-7V	20A
7 and8	2.75		59.40	2-7V	115A
9 and 10	2.75		52.80	2-7V	115A

Interface Power supply for use with either crate

Power Output Number	Voltage Required	Current Required	Power Required	PL 500 Voltage Range	Power Supply Suggestions Maximum Current
1	5.25 V	63.00 A	330.75 W	4-10V	80A
2	15.10 V	4.50 A	67.95 W	12-30V	23A
3	2.75 V	16.28 A	44.77 W	2-7V	20A
4	2.75 V	59.40 A	163.35 W	2-7V	115A
5	2.75 V	52.80 A	145.20 W	2-7V	115A

Total 752.02 W

Adapter Card Power Requirements

PS unit volts	Current Per hybrid ma	Current Per hybrid amps	Current Per End amps	Current Total amps	Current Per Oct. amps
3.3	72	0.072	31.968	63.936	5.328
5	133	0.133	59.052	118.104	9.842

Need 2 Power Supplies each with 7 outputs (3U Box) now and eight more power supplies later after final design.

Requirements:

1) Long distance remote sensing (150 Ft.)(Model PL 500 with delayed compensation).
2) 208 VAC input power

Desired Options:

1) Sinusoidal mains current EN 61000-3-2
2) Can- field bus Interface with monitoring and control compatibility
3) Power fail– and system reset- signal
4) Interlock input
5) Type 53 for 3U – Box 5U for 2 U display front (horizontal) or bottom air intake (Accessories)

OFFER No.: 09330-A/02
Springfield Ohio, 09/18/02

Dear Rick,

Please find following the modified quote for the PL500-F8 with 7 output voltages:

Floating Power Supply PL500-F8

Micro-processor controlled low-noise power supply (3U high) with 7 floating DC outputs channels (3 MEH modules + 2 MDH module), outputs:

1) 4-10V / 80A (M**EH**)
2) 2-7V / 115A (M**EH**)
3) 2-7V / 115A (M**EH**)
4) 2-7V / 25A (1/2 MDH)
5) 12-30V / 11.5A (1/2 MDH)
6) 2-7V / 25A (1/2 MDH)
7) 2-7V / 25A (1/2 MDH)

all channels individual sensed, voltage adjustment (10mV resolution) for all channels, extremely low noise and ripple, AC auto-range input 95 ... 264VAC / 16A with power factor correction
3U power chassis LX version with alphanumeric display and CAN-bus interface for remote monitoring and control

Price for PL500-F8 power supply (quantity 1...4) : 6,045.00$
Special price for 8 power supplies, each : 5,743.00$

Delivery time: about 12 weeks aro
Delivery: ex works Springfield-OH, add shipping
Payment: within 30 days after shipment net,
Guarantee: 1 year after date of invoice
Validity of this offer:3 weeks.

Please contact us if you need any additional information.
Yours faithfully,
Andreas Ruben

****
W-IE-NE-R, Plein & Baus Ltd.
300 East Auburn Ave. WIENER & CAEN U.S. Sales Office
Springfield, OH 45505, Dr. Andreas Ruben
Phone: (937)324 2420 FAX:(937)324 2425
E-Mail: sales@wiener-us.com
URL: http://www.wiener-us.com
****

OFFER No.: 08332/02
Springfield Ohio, 09/18/02

Dear Rick,

We offer a CAN-USB interface with software running on Windows 9x/ME/2000/XP. This Windows crate manager software allows you to monitor all power supplies with status, voltages and currents and to switch them on / off. For our crates additional features are SYSRES (only VME), adjustable fan speed, and fan configuration is available. The program is written in MS Visual C++. We can provide the source code so that you may add features if required.

CAN-USB, USB interface for CAN-bus, with P-CAN light driver,
P-Can view software and WIN-CRM, windows crate
manager software for CAN-bus based WIENER crate
remote control (Windows 95 / 98 version / XP)
Price per system: 575.00 $

Delivery time: about 3 .. 4 week a.r.o.
Delivery: f.o.b. Springfield-OH, add packing / shipping
Payment: net 30 after invoicing,
add 2% for 45 days, 5% for 60 days and further 1.5%
for each additional month.
Guarantee: 1 year parts and labor for free returned goods.
Validity of this offer: 1 month.

Please contact us if you need any additional information.

Yours faithfully,

Andreas Ruben

****
W-IE-NE-R, Plein & Baus Ltd.
300 East Auburn Ave. WIENER & CAEN U.S. Sales Office
Springfield, OH 45505, Dr. Andreas Ruben
Phone: (937)324 2420 FAX:(937)324 2425
E-Mail: sales@wiener-us.com
URL: http://www.wiener-us.com
****

JUSTIFICATION FOR NONCOMPETITIVE PROCUREMENT

I RECOMMEND THAT NEGOTIATIONS BE CONDUCTED ONLY WITH
W-IE-NE-R, Plein & Baus Ltd.
300 East Auburn Ave. WIENER & CAEN U.S. Sales Office
Springfield, OH 45505, Dr. Andreas Ruben
Phone: (937)324 2420 FAX:(937)324 2425
E-Mail: sales@wiener-us.com <mailto:sales@wiener-us.com>
URL: <http://www.wiener-us.com>

FOR THE SUPPLIES AND/OR SERVICES DESCRIBED IN THE ATTACHED

REQUISITION FOR THE REASON(S) CHECKED (X) BELOW.

( ) PROCUREMENT HISTORY

( ) ESTIMATED COST

( ) SCHEDULE REQUIREMENTS

( ) EXCLUSIVE CAPACITY

(X) OTHER

1) Micro-processor controlled low-noise power supply (3U high) with 7 floating DC outputs channels (3 MEH modules + 2 MDH module), outputs:

2) All channels individual sensed, voltage adjustment (10mV resolution) for all channels, extremely low noise and ripple, AC auto-range input 95 ... 264VAC / 16A with power factor correction
3U power chassis LX version with alphanumeric display and CAN-bus interface for remote monitoring and control.

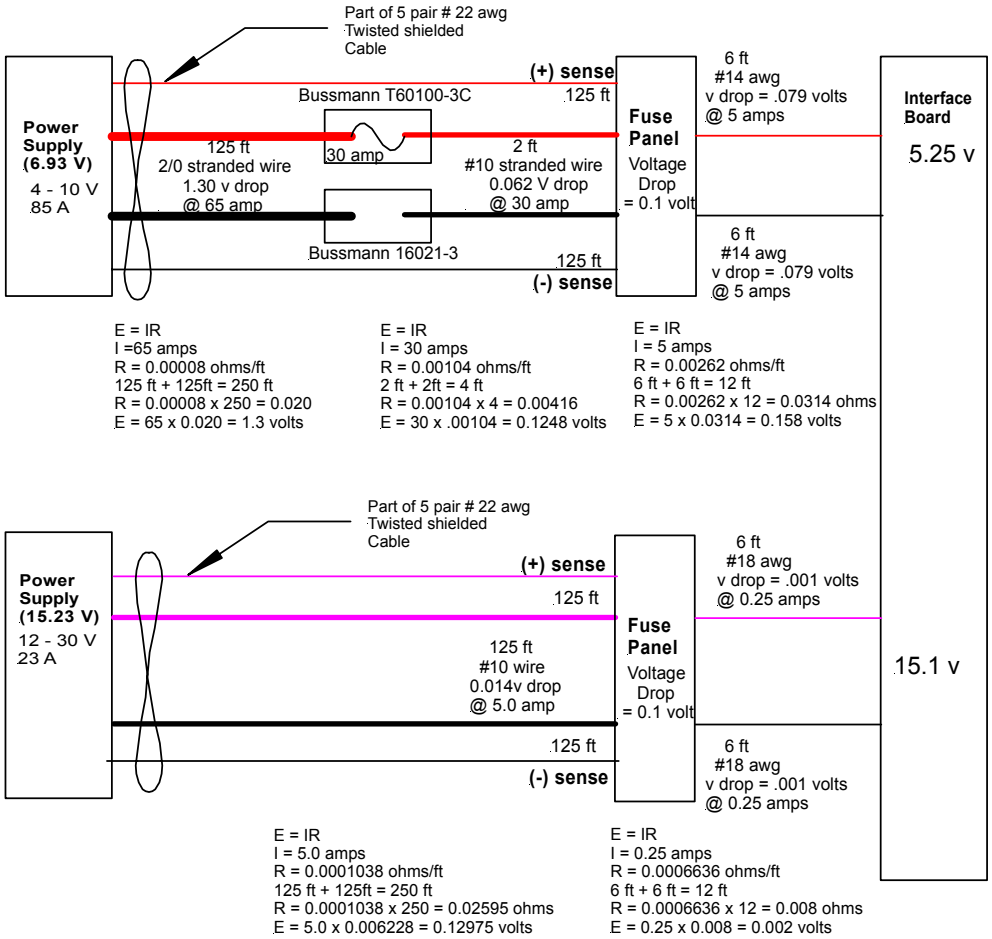

Total Voltage Drop = 1.68 V

1) 2/0 = 1.30 V Power supply to distribution
2) #10 = 0.125 V Distribution to fuse panel
3) FP = 0.100 V Fuse and fuseholder
4) #14 = 0.158 V Fuse panel to J1 backplane

Total Voltage Drop = 0.132 V

1) #10 = 0.130 V
2) #14 = 0.002 V

Voltage Required from vdd Power unit will be 6.00 volts

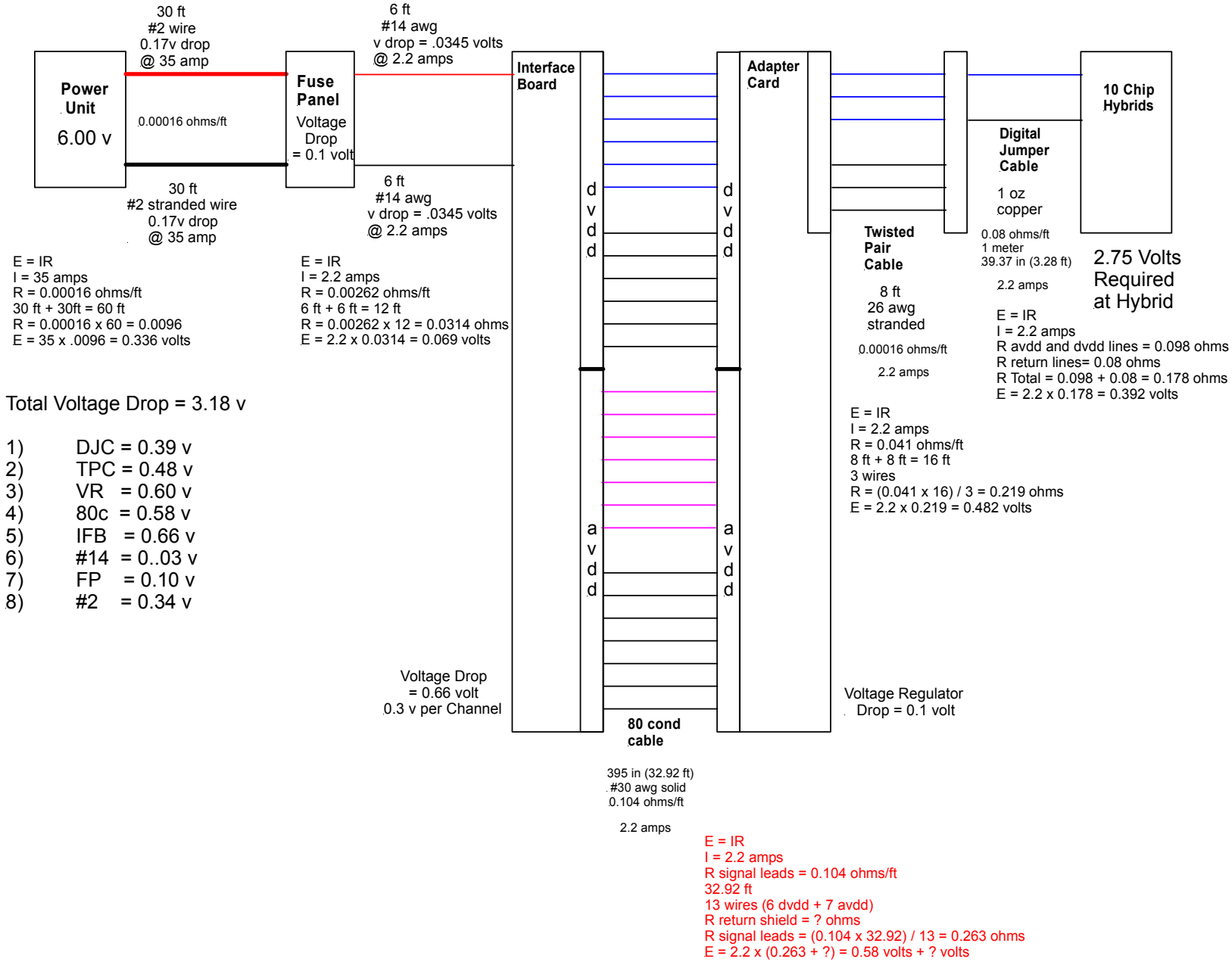

SMT DC Power Distibution Panel

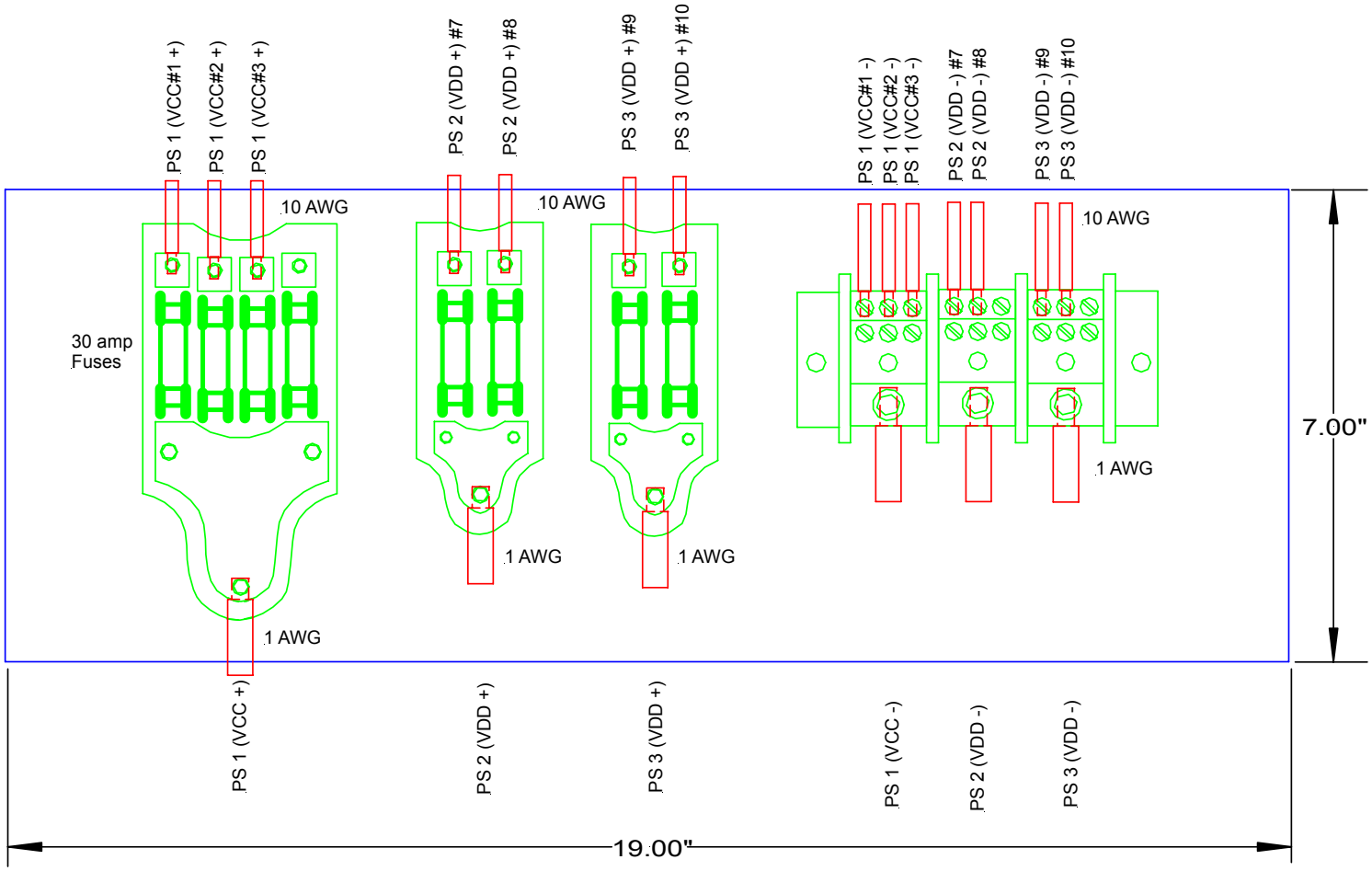

John Foglesong

23 October 2002