DØ Run 2b Level-1 Trigger Upgrade

Hal Evans **Columbia University**
(for the DØ Collaboration)

Burning Questions

1. **Why?**
2. **How?**
   - **Physicist World**
   - **Real World**
3. **When?**
4. **Who?**
5. **How Much?**
6. **The Plan?**

The DØ Run 2 Detector

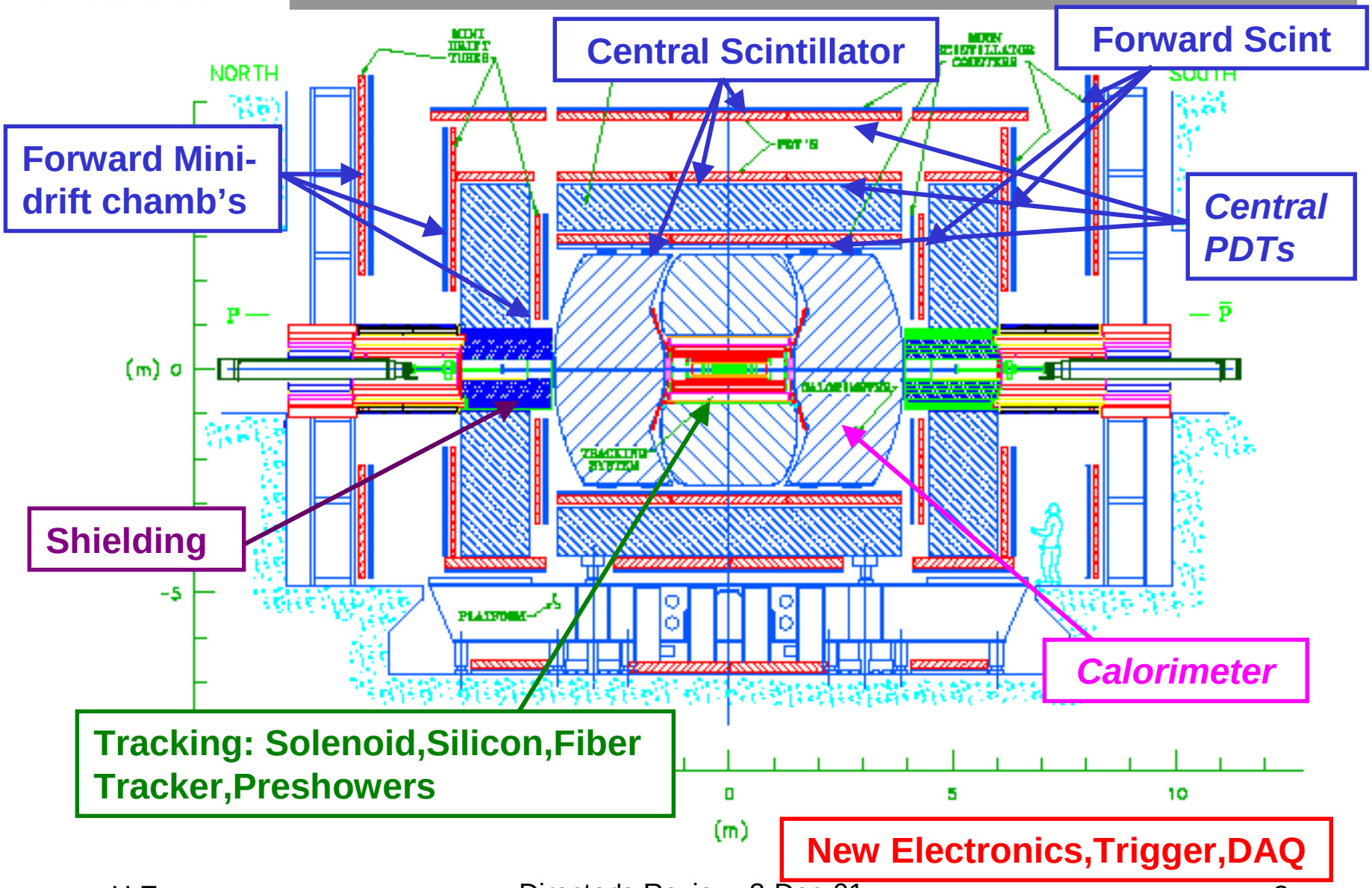

The Run 2a Trigger System

Level-1

- Mainly detector-based
- Correlations
  - Cal-Trk: quadrant level
  - Mu-Trk: L1trk info → L1Mu
- Not deadtimeless
  - Out rate ~5 kHz (r'dout time)

Level-2

- Calibrated data
- Extensive correlations
- Physic objects out (e,μ,τ,j…)
- Out rate < 1.8kHz (cal r'dout)

Interdependence

- High level of connectivity
- All elements must function for system to work

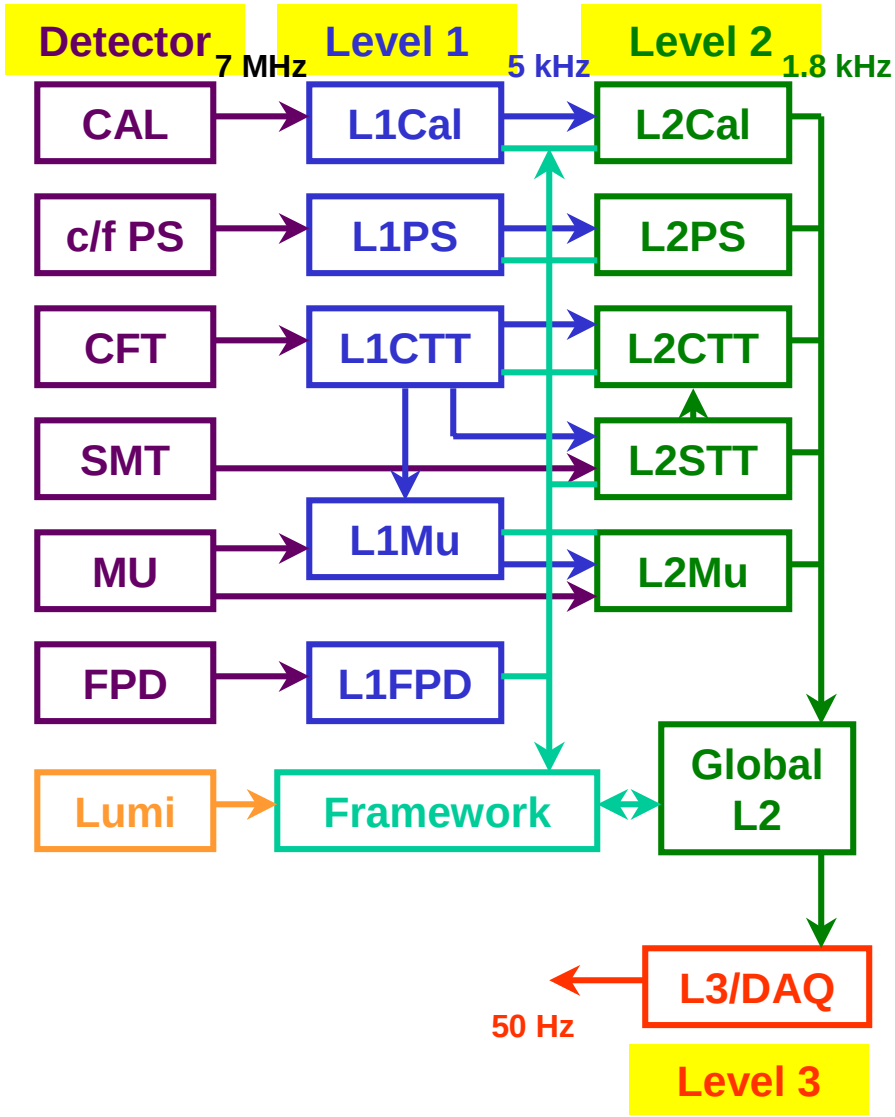

L1 Track Trigger in Run 2a

- Uses CFT + CPS/FPS
- Unit = 4.5° Sector (80)
- Tracks from hit pattern
  - Hits defined using pairs of fibers (doublets)
  - Comp. to valid patterns loaded into FPGA
- Functional Elements
  - AFE: signals from VLPCs
  - Mixer: sorts AFE signals
  - DFE: track finding
- Output for each sector
  - N(trks) in 4 P_T Bins

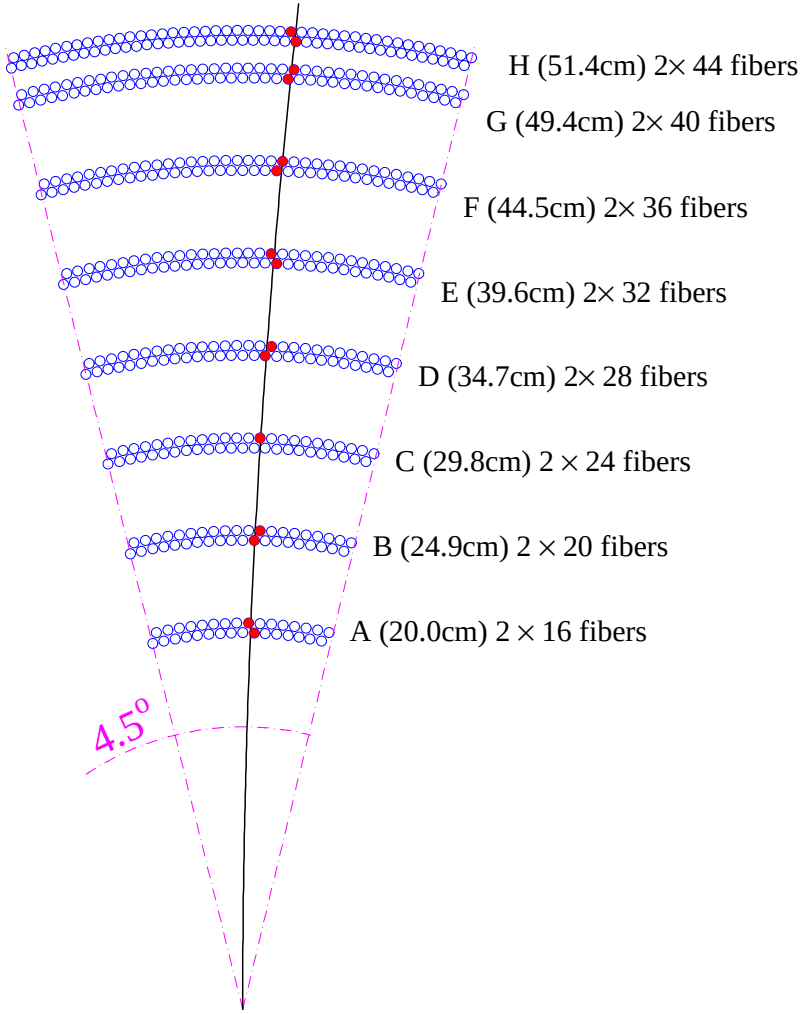

L1 Cal Trigger in Run 2a

- Using Run 1b System (1990)
- Unit = Trigger Tower (TT)
  - $\Delta\eta \times \Delta\phi = 0.2 \times 0.2$
  - Detector = 40×32
    $\Rightarrow$ 1280 EM + 1280 Had
- Functional Elements
  - Pickoff: analog sums for TT
  - CTFE: ADC + TT thr's
  - Adder Trees: Global Sums
- Outputs
  - No. EM & EM+H TTs > 4 Thr
  - Global E_T Sum
  - Missing E_T

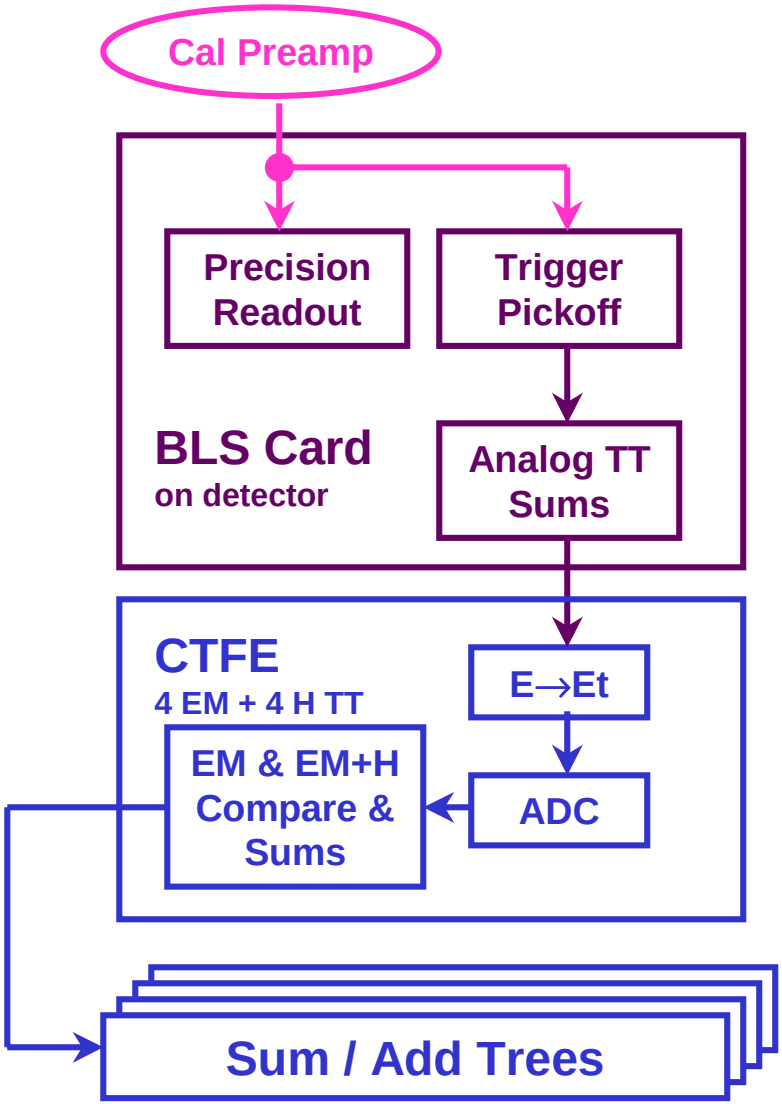

Run 2b, the Trigger & the Higgs

Run 2 W.G. Results Assume

- ~100% Leptonic Trig. eff.
- ~100% L1 eff. for $ZH \rightarrow \nu\nu bb$
  - ME_T>35 GeV + topo jet cuts

A Big Challenge in Run 2b

- High P_T Trig's > Bandwidth at $L = 5\times10^{32}$ $cm^{-2}s^{-1}$

Trigger	Phys	L1 rate (kHz)
EM Trigger Tower > 10 GeV	$W \rightarrow e\nu$	5
Jet Trigger 2 H+EM towers Σ > 4GeV	$ZH \rightarrow \nu\nu bb$	2
Track Trigger 2Trks (5,10GeV) + Iso + EM>2GeV	$H \rightarrow \tau\tau$	10

Time is Short

- End of shutdown ~ Apr '05

DØ Studies Ongoing

- Trigger Task Force
  - Develop plan for Run 2b Trigger Syst
  - Tracking, Calorimeter, Muon, Tech/H'ware
  - Produced report Sep '01
- Conceptual Design Report
  - Refine TTF report
  - Focus on Level-1
  - Feasibility arguments for Level-2,3
  - Report: Oct. 14 '01
- Currently preparing Detailed Technical Designs
  - Aim for early '02

Growing Pains for Level-1

System	Problems	Solutions
Cal	1) Slow signal rise $\Rightarrow$ trig on wrong X'ing 2) Trig on $\Delta\eta\times\Delta\phi$=0.2×0.2 TTs $\Rightarrow$ slow turn-on curve	• Digital Filter • Clustering
Track	1) Rates sensitive to occupancy $\Rightarrow$ ×1000 increase 2a→2b	• Narrower Track Roads • Improve Cal-Track Match
Muon	No Additional Changes Needed!	• Requires Track Trig

Cal Jet Resolution

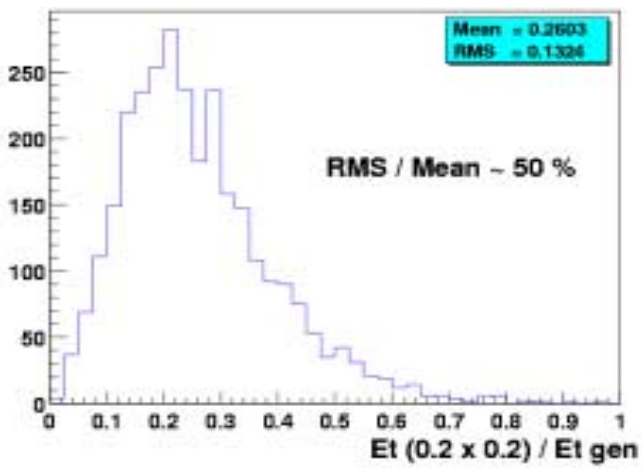

2 Track Trigger Rate (Hz)

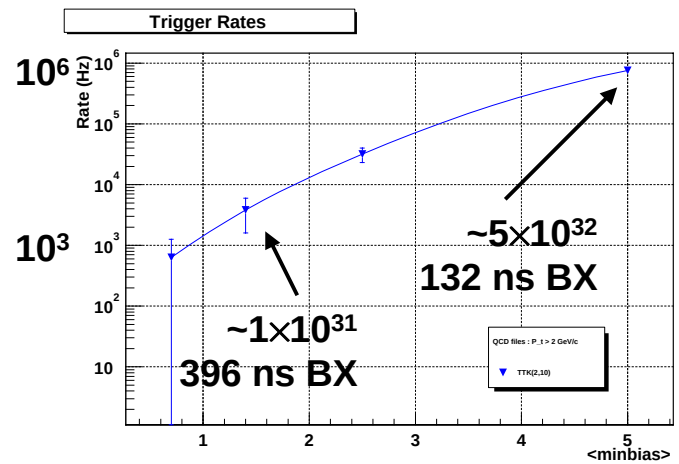

Cal Trigger Signals

Problem

- Signal rise time > 132 ns
- Can cross threshold before peak
  ⇒ trig on wrong crossing
- Affects interesting high-E events

Possible Solutions

1. Shape harder
   - Unacceptable reduction in amplitude
   - Not confident in this
2. Digital Filter
   - More flexible
   - Suppresses pileup
   - Improves E resolution

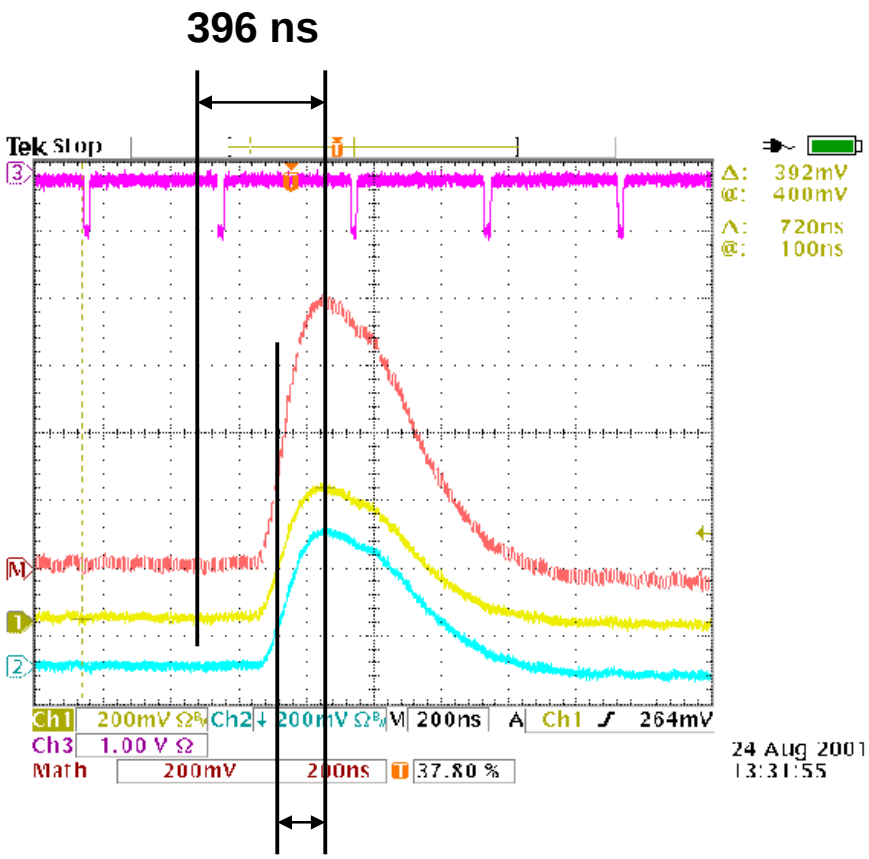

EM TT Signal

Cal Trigger Tower Clustering

Problem

- Jets clusters > TT size
- EM clusters fall on boundary
- Poor E-res → Shallow turn-on curves

Possible Solution

- TT Clustering:
  Atlas sliding windows
- Additional Benefits
  - EM shape & Isolation cuts
  - Topological Triggers
  - Include inter-cryo region in Global Sums
- Include output for Track Matching

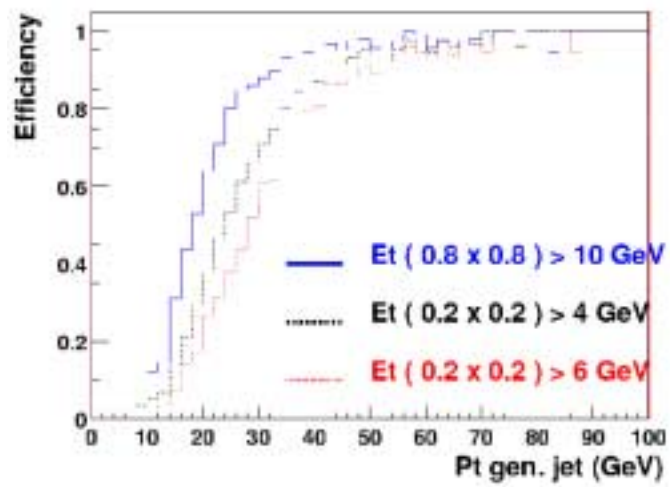

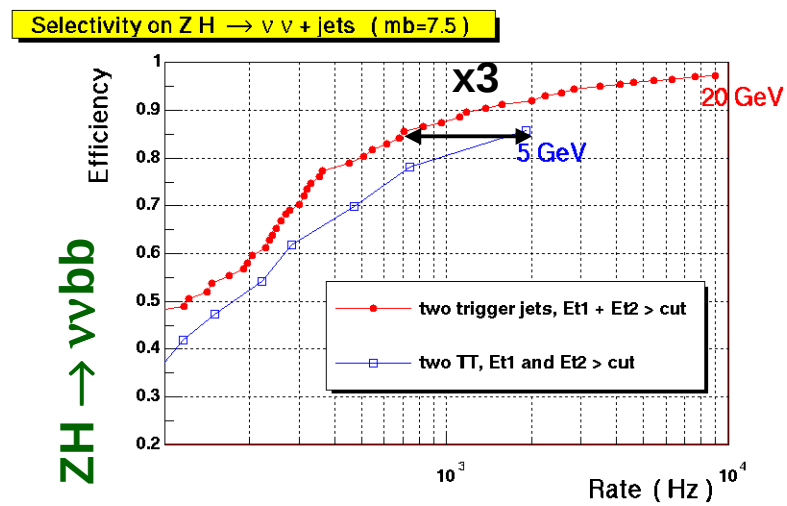

Track Trigger Upgrade

Problem

- Rate soars w/ Occupancy
  - 10^6 Hz at 5×10^{32} (5 min-bias)

Solutions

1. Reduce size of track finding road: use single fiber instead of doublets
   - No. eqn's increases
   - Tune no. of layers using singlets
   - Use same system with new FPGAs in DFE's
2. Cal-Track Matching
   - New Cal Trig could provide ×8 finer granularity for matching
   - Modest extension of Cal upgrade

Doublet Layer

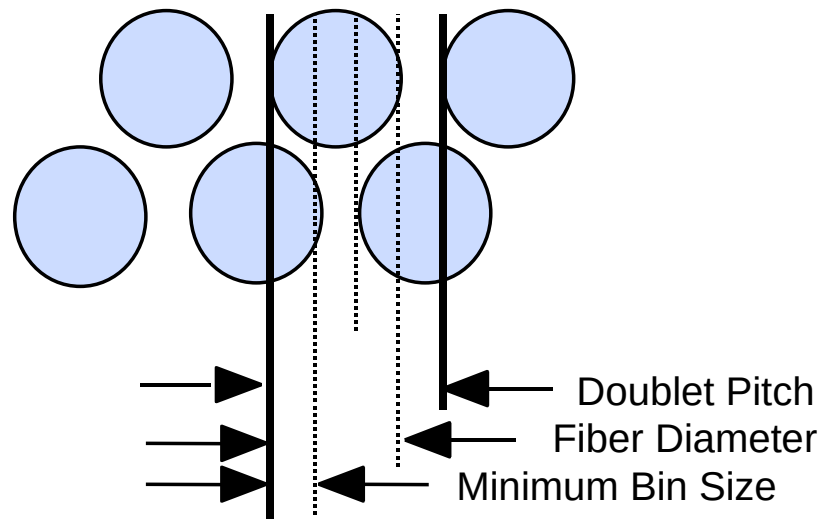

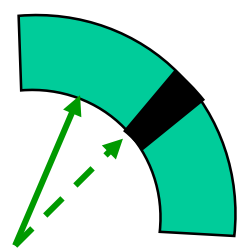

Track Trigger Upgrade (cont)

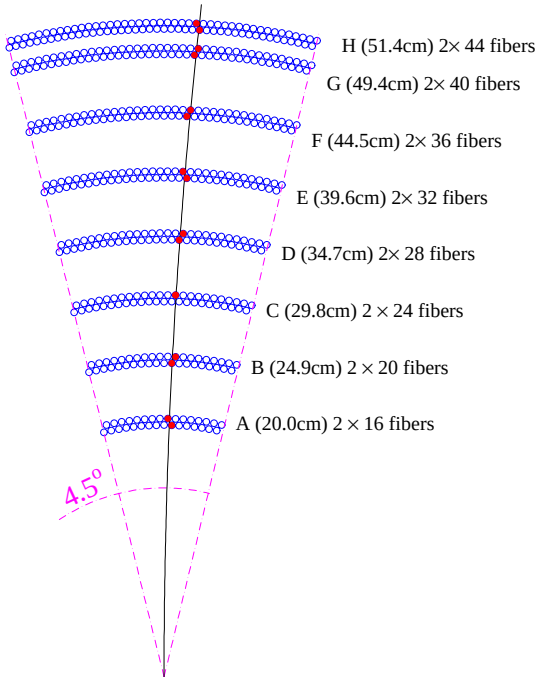

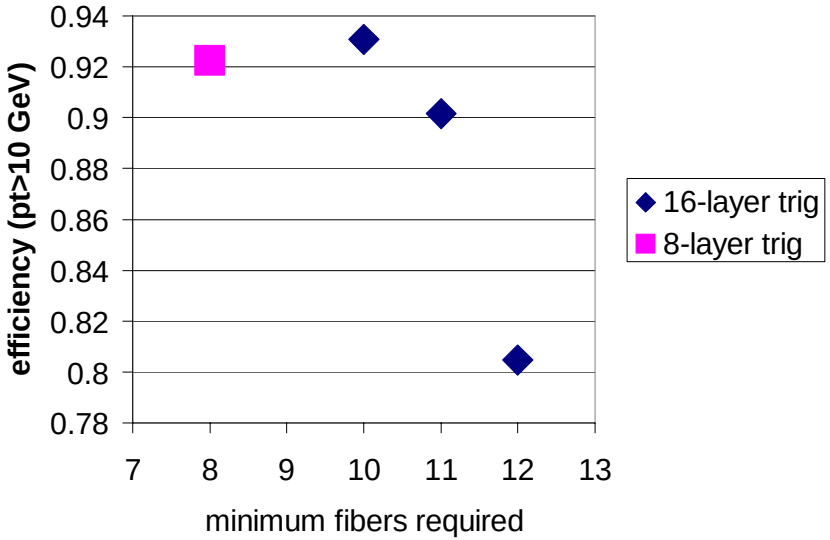

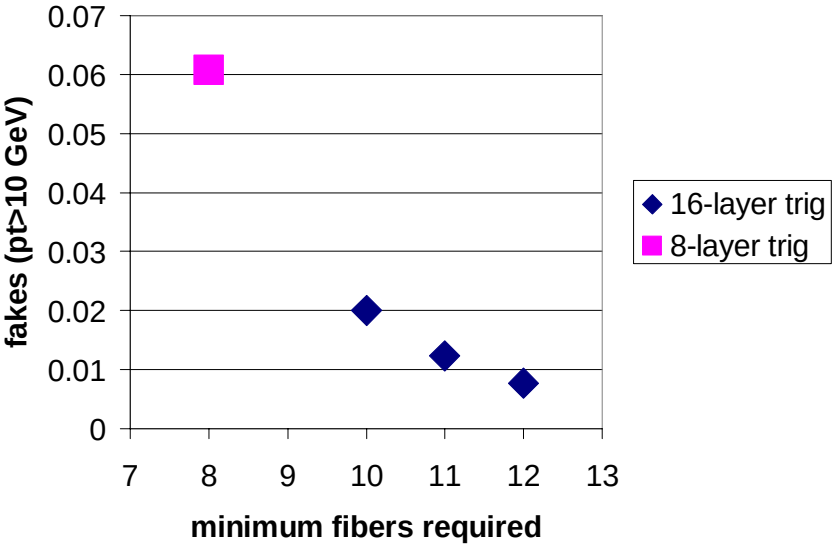

Cal-Track Match Bgrd Rej Gains

- **EM Triggers: ×2**
- **High P_T Tracks: ×10**

Does It All Help?

		L1 rate (kHz)		
Trigger	**Phys**	**No Upgr**	**Upgrade**	**Effects**
EM Trigger Tower > 10 GeV	$W \rightarrow e\nu$	5	0.3	• EM Fraction • Cal-Track Matching • Singlet CTT roads
Jet Trigger 2 H+EM towers Σ > 4GeV	$ZH \rightarrow \nu\nu bb$	2	0.6	• Cal Clustering
Track Trigger 2Trks (5,10GeV) + Iso + EM>2GeV	$H \rightarrow \tau\tau$	10	0.3	• Cal-Track Matching

Design Status

System	Groups Interested	Design Ideas
Track	Boston, Notre Dame, Manchester, Kansas, FSU, Rice	• Modify existing DFE d'board * larger FPGA
Cal-Trk Match	Arizona	• Re-use L1Mu boards * minor mod's
Calorimeter	Saclay, Orsay, LAL, Paris IV, Columbia, MSU	• New design * Digital Filter * Flexible Clustering Algo Board * Summing * Output for Cal-Track Match
Online Software	Northeastern	• Build on 2a expertise
Simulation	All	• ongoing effort

A Strong Team !

Level-1 Cal Upgrade Architecture

Required Mod's of ADC & Algo's ⇒ New System

- **Have looked into partial/phased options ⇒ not viable**
- **Replacing one part would require substantial redesign of the rest**
- **Each part is necessary to obtain the final result**

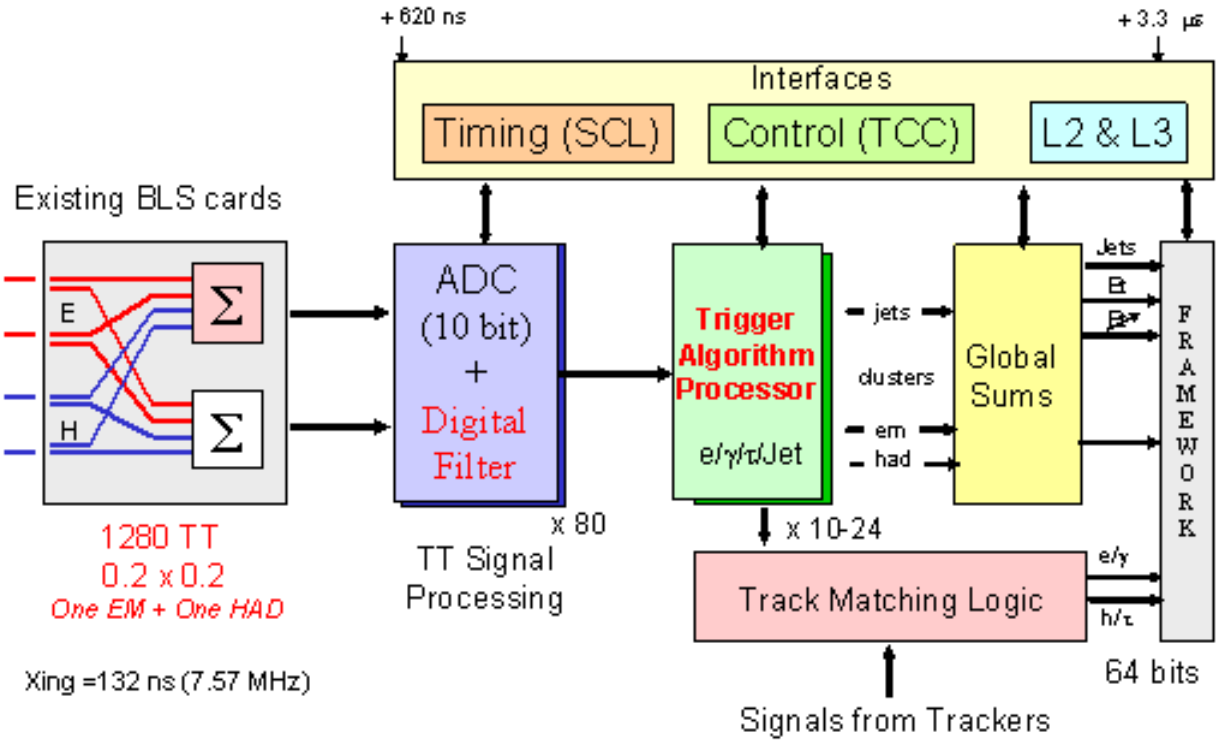

Looking into the Future

No Final Design for Any System

- Est Schedule, Personnel, Costs based on prev. experience
- Main point of the exercise: Look for Critical Items
- Designs are moving rapidly → Better Estimates Soon !

Starting Points

- Tracking — experience from Run 2a DFE d'boards
- Cal-Trk Match — existing L1Mu + small mod's
- Calorimeter — boards of similar complexity
  - Digital Filter — L1 Tracking AFE board
  - Algorithm — STT Track Fit Card (8 DSPs,…)
  - Control — L1 Tracking System
- Corrections to these may be non-Perturbative (esp. Cal)
  - Include Large Contingency
  - Preliminary indications are that the corrections negative !
    - Design (FPGA code) of functional elements of ADC/Dig-Filt & Algorithm Board

Schedule & Personnel

TRACKING	
Task	End Date
Design & Sim FPGA Algo's	6/04
Prototype DFEAs	5/02
Production DFEAs	9/02
Ready to install	6/04

CAL-TRACK MATCH	
Task	End Date
Mod & Fab L1Mu Boards	8/02
Infrastructure	10/02
Ready to Install	2/03

PERSON YEARS OF EFFORT		
Project	E-Eng	E-Tech
Cal	5.6	4.2
Track	01.3	0.5
Cal-Trk	0.8	0.6

CALORIMETER	
Task	End Date
Dig.-Filt. Test Card & Study	2/03
ADC/Dig-Filt. Board (ADF) * Prototype & Test * Control Card * Finalize ADF	12/04 * 8/03 * 6/03 *11/03
Algorithm Board (TAB) * Prototype & Test * Control Card * Finalize TAB	11/04 * 10/03 * 5/04 * 6/04
Integrate ADF & TAB	8/04
Install	2/05

Shutdown Ends ~ 4/05

Costs: Materials & Services

TRACKING TRIGGER				
Item	Unit [$]	~#	Total [k$]	Total + 50% [k$]
Fab/Stuff DB's	500	88	44	66
Buy FPGAs	900	350	315	473
TOTAL			359	539

CAL-TRACK MATCH				
Item	Unit [$]	~#	Total [k$]	Total + 50% [k$]
MTCxx+Flav	3300	9	30	45
Link Boards	100	256	26	39
Crate Man's	3400	2	7	10
Serial Cables			18	26
Infrastructure			18	26
TOTAL			97	146

CALORIMETER TRIGGER				
Item	Unit [$]	~#	Total [k$]	Total + 50% [k$]
ADC/Dig-Filter	3500	105	368	551
ADF Ctrl	2000	8	16	24
Crates/Power			57	86
Algo Cards	7500	30	225	338
Algo Ctrl	500	4	2	3
Crates/Power			9	14
Link/Rdout/Ctrl			49	74
TOTAL			726	1089

Total L1 M&S Cost

- **$1,182k** no conting.
- **$1,773k** 50% contig.

The Short-Term Plan

The Next Few Months will be Crucial. Need to:

- Make 1st pass engineering designs
- Finalize assignment of responsibilities
- Secure funding

Some Possibilities

- Parallel designs proceeding for Cal
  - Final decisions soon
- NSF MRI Grant — 1/24/02 deadline
  - Planning participation now
- Foreign Aid — engineering & money
  - Strong French interest
  - Some resources in the UK

Summary

- L1 Run 2b Upgrade moved from Conceptual → Technical Design Phase
  - Concentrating on Engineering design of systems
- Lots of Enthusiastic Participation
  - Still crafting final responsibilities
- Calorimeter project most critical in terms of Money & Time
- Money will be an Issue – Personnel will not
  - Expect good news from firmer design
  - Investigating MRI submission
  - Help from Foreign Collaborators
- To Stay on Track We Must
  - Continue the High Level of Effort
  - Enable the Flow of Money