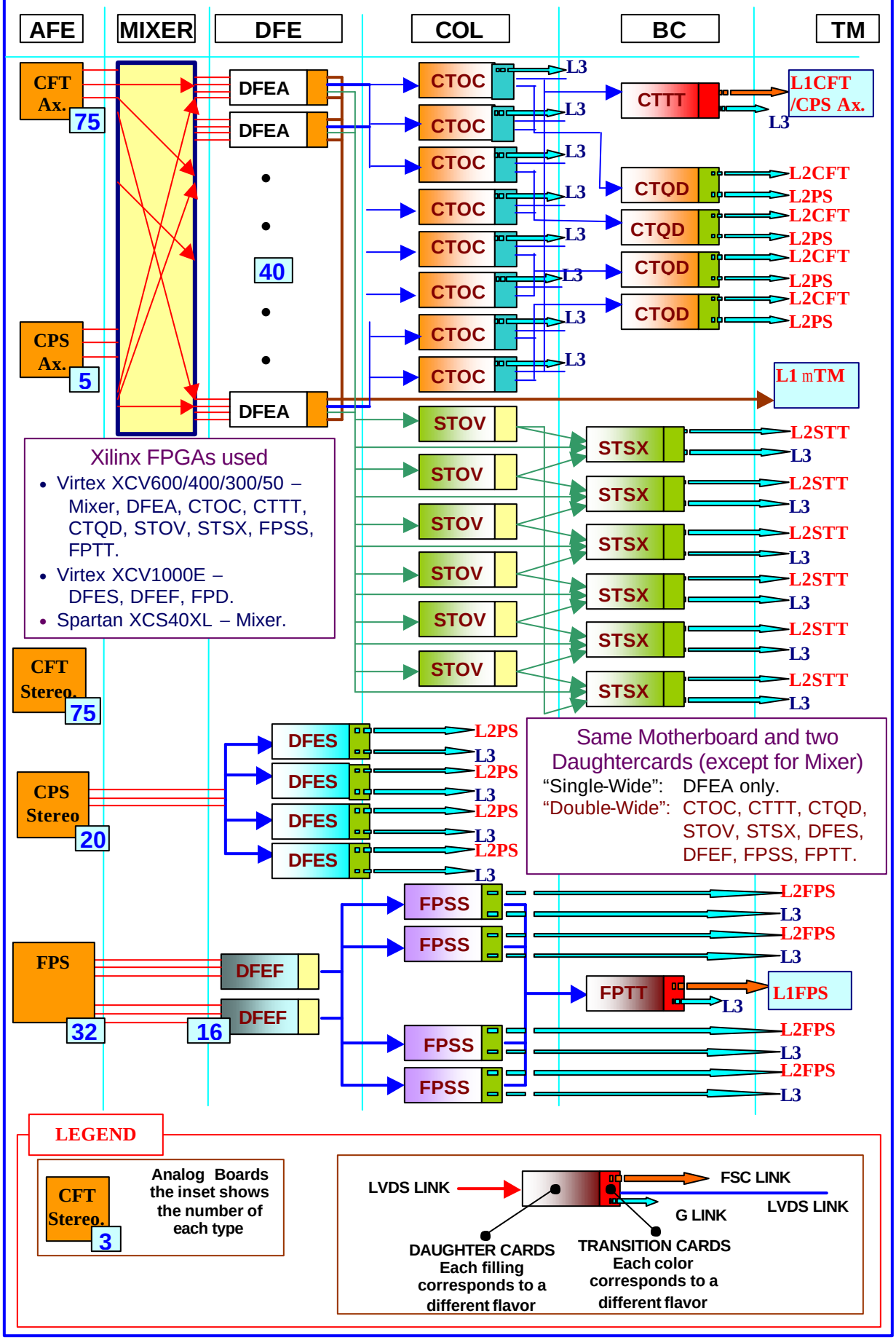CTT Organization showing links to the L1 TM, L2 PreProcessors and L3