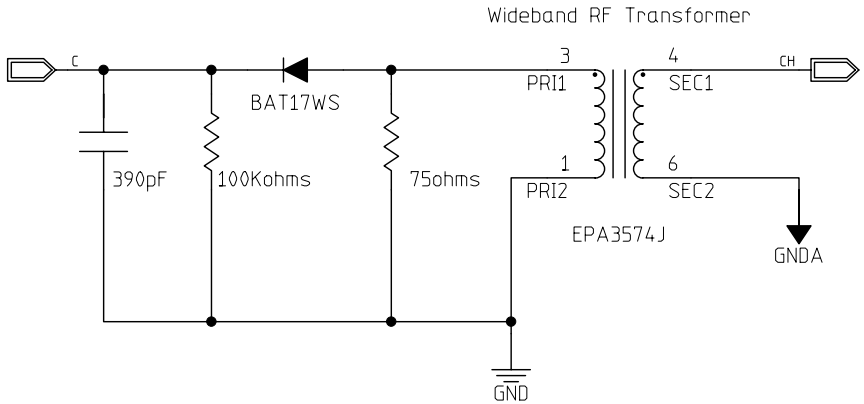

MODFIED 10:06:07 AM 07/11/2003				
UNLESS OTHERWISE SPECIFIED			ORIGINATOR	
FRACTIONS	DECIMALS	ANGLES	DRAWN	
			CHECKED	
			APPROVED	

1. BREAK ALL SHARP EDGES 1/64 MAX.
2. DO NOT SCALE DWG.
3. DIMENSIONING IN ACCORD WITH ANSI Y14.5 STD's.

√ MAX. ALL MACHINED SURFACES

USED ON

MATERIAL

Fermi National Accelerator Laboratory
United States Department of Energy

C:\Public\Jobs\FPD_Patch_Panel_Quartered\FPD_Patch_Panel_Quartered.prj

SIZE	SCALE	FILMED	DRAWING NUMBER	PAGE 01 of 01	REV
B	1:1				

H=2LA; V=2LA