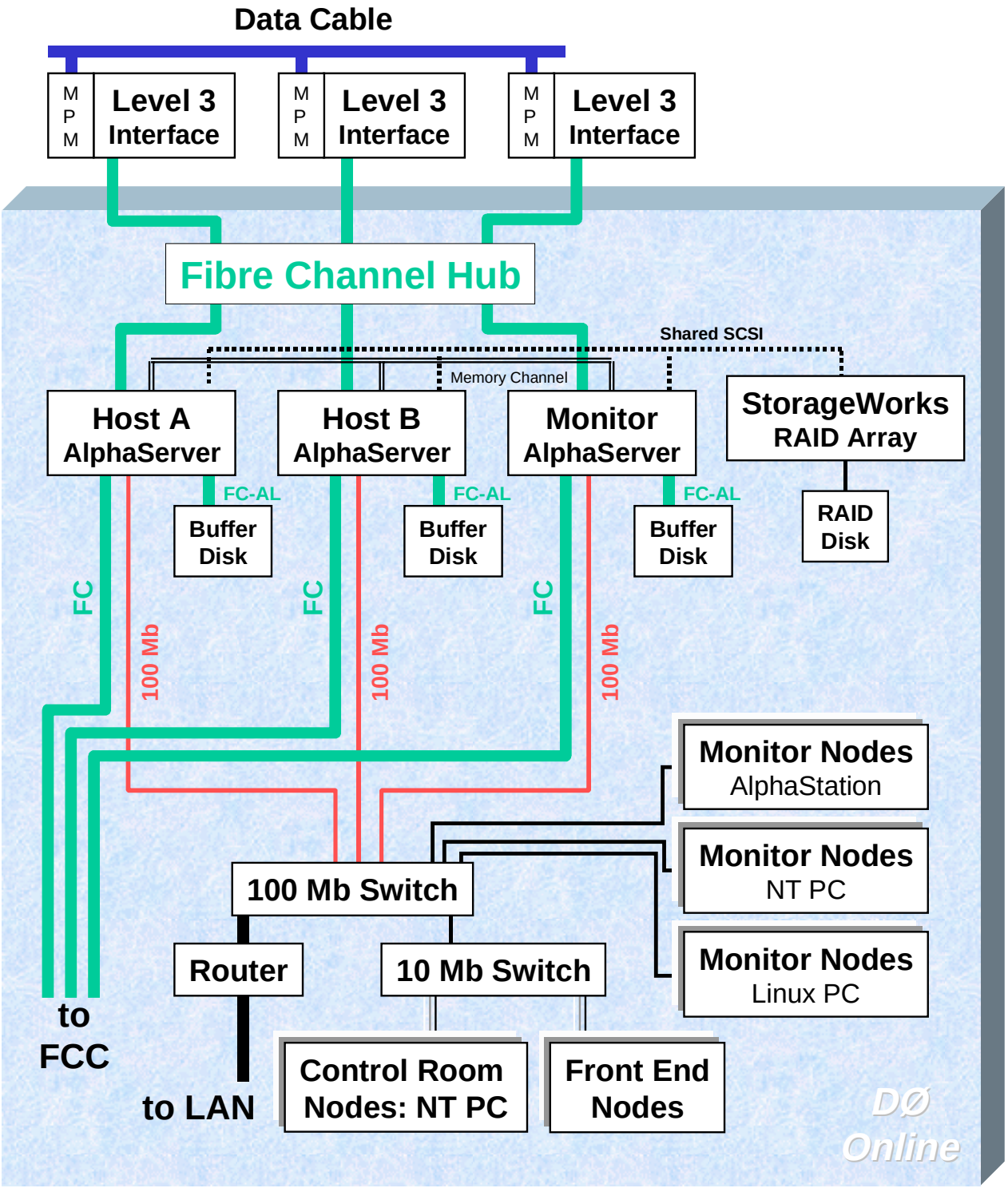Hardware Architecture