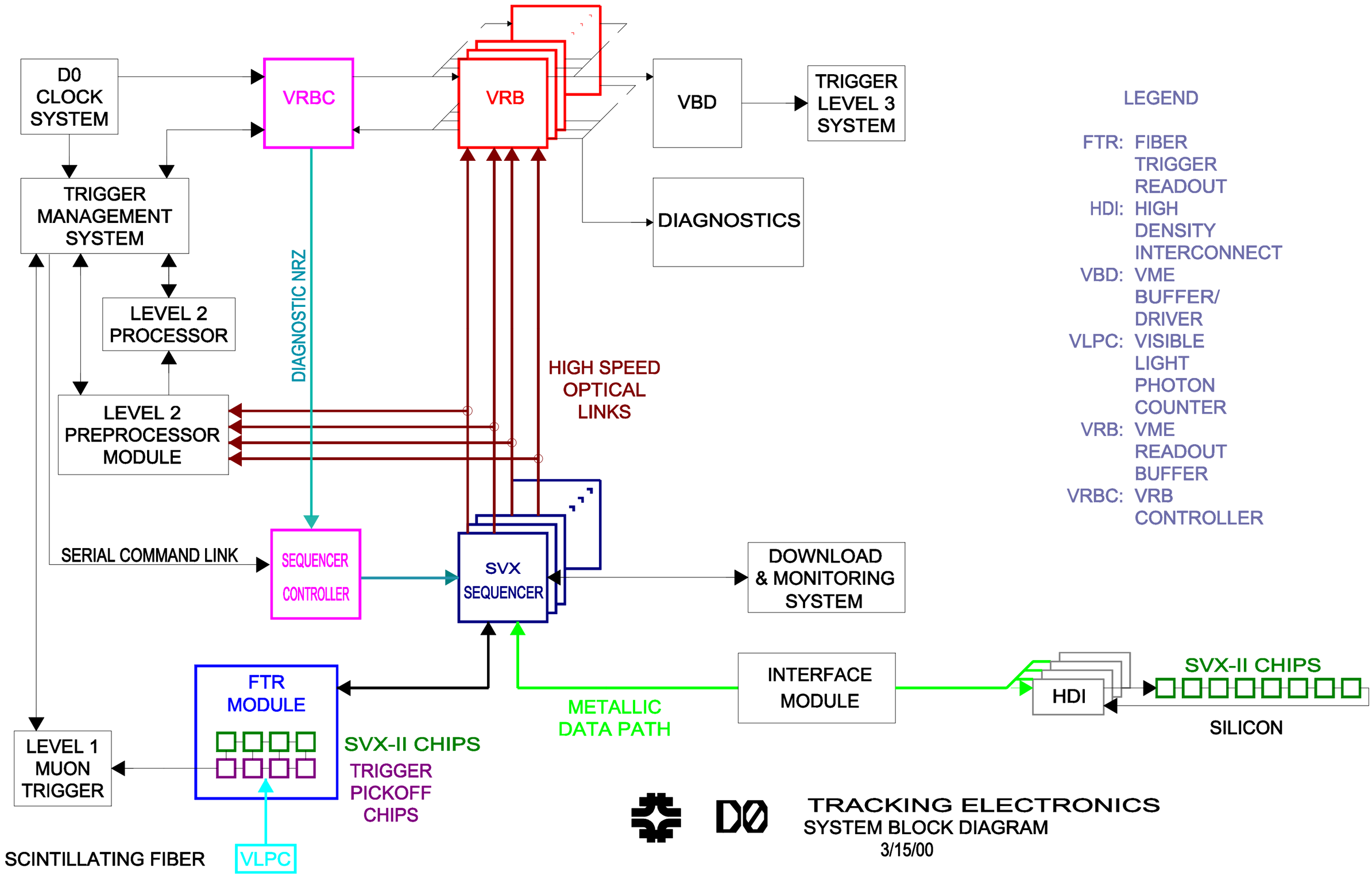
D0 CLOCK SYSTEM
VRBC
VRB
VBD
TRIGGER LEVEL 3 SYSTEM
TRIGGER MANAGEMENT SYSTEM
DIAGNOSTICS
LEVEL 2 PROCESSOR
DIAGNOSTIC NRZ
HIGH SPEED OPTICAL LINKS
LEVEL 2 PREPROCESSOR MODULE
SERIAL COMMAND LINK
SEQUENCER CONTROLLER
SVX SEQUENCER
DOWNLOAD & MONITORING SYSTEM
FTR MODULE
INTERFACE MODULE
HDI
SVX-II CHIPS
SILICON
METALLIC DATA PATH
LEVEL 1 MUON TRIGGER
SVX-II CHIPS
TRIGGER PICKOFF CHIPS
SCINTILLATING FIBER
VLPC
LEGEND
FTR: FIBER TRIGGER READOUT
HDI: HIGH DENSITY INTERCONNECT
VBD: VME BUFFER/ DRIVER
VLPC: VISIBLE LIGHT PHOTON COUNTER
VRB: VME READOUT BUFFER
VRBC: VRB CONTROLLER
D0
TRACKING ELECTRONICS
SYSTEM BLOCK DIAGRAM
3/15/00