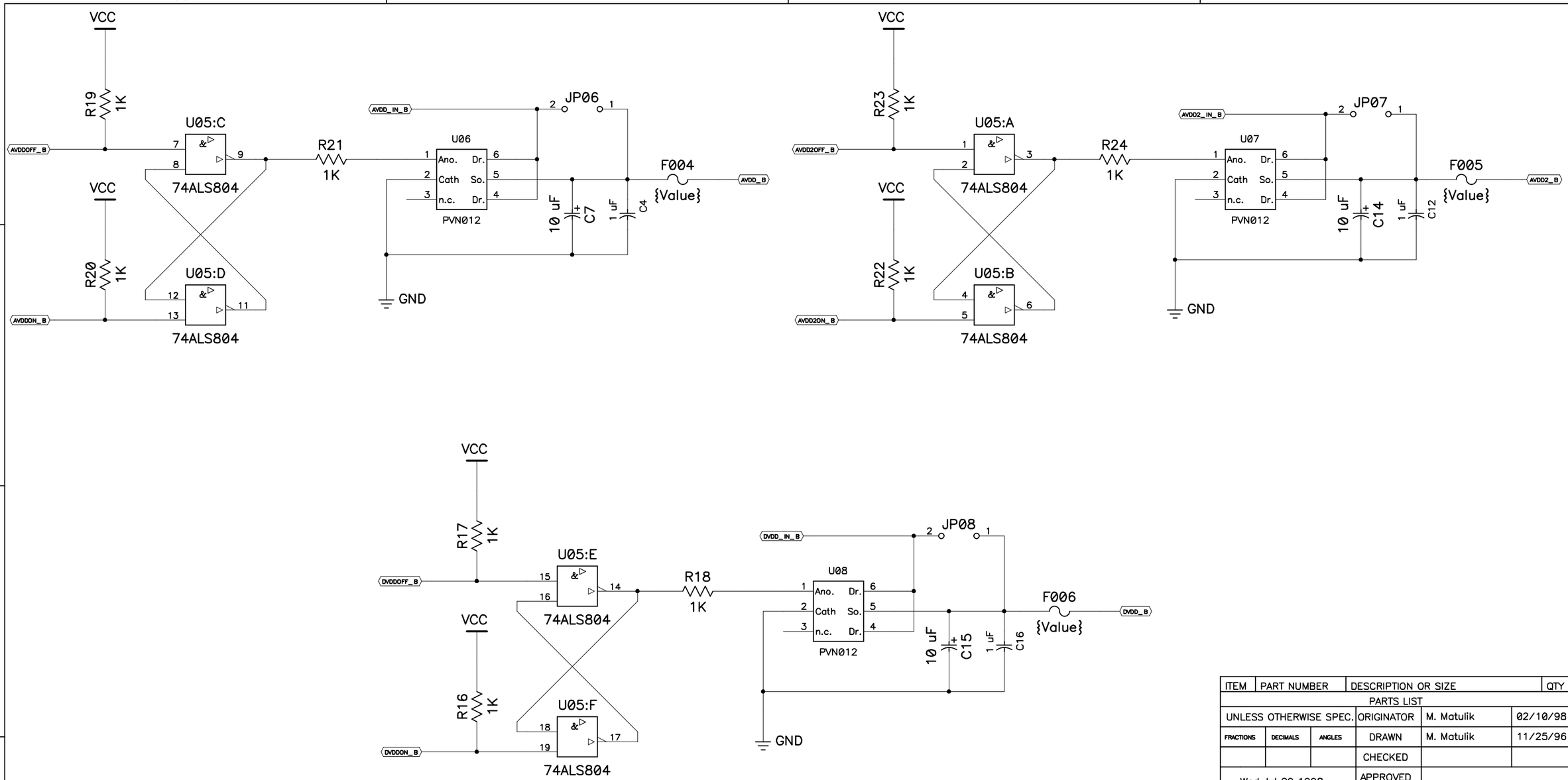

ITEM	PART NUMBER	DESCRIPTION OR SIZE	QTY
PARTS LIST			

UNLESS OTHERWISE SPEC.			ORIGINATOR	M. Matulik	02/10/98
FRACTIONS	DECIMALS	ANGLES	DRAWN	M. Matulik	11/25/96
			CHECKED		
Wed Jul 29 1998 15:43:17			APPROVED		
			USED ON		
			MATERIAL		

FERMI NATIONAL ACCELERATOR LABORATORY
UNITED STATES DEPT. OF ENERGY

Interface Module Prototype

SCALE	FILMED	DRAWING NUMBER	Sheet 5 of 5	REV.
		3823.112-EB-330109		D