Fermi National Accelerator Laboratory

D0 Engineering Note

M. Utes

Date: 5/20/4

Project: Run II B
Doc. No: 200504A

Subject: Attaching the Auxiliary SASeq Driver Board to the SASeq.

The Auxiliary SASeq Driver Board is used to provide higher current drive for the SASeq when long gray cables are used.

Two wires are used to connect the Auxiliary SASeq driver board to the SASeq:

1) Attach a red wire from J3 on the driver board to pin 1 of the ALS191 U58 on the SASeq.
2) Attach a 30 AWG wire from J4 on the driver board to pin 1 of the ABT162500 U86 on the SASeq.

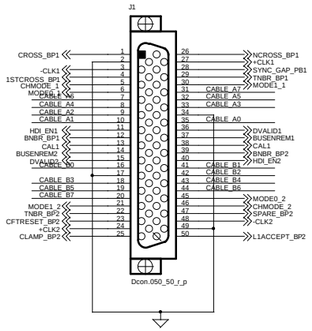

CABLE SIDE

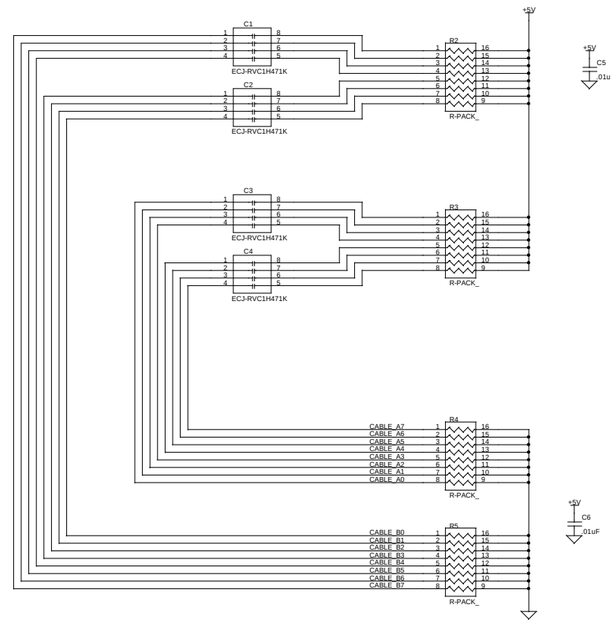

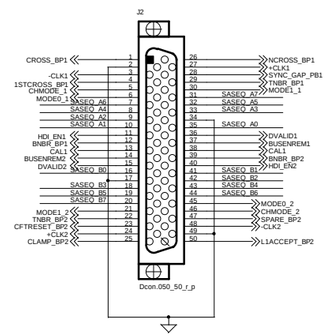

SASEQ SIDE

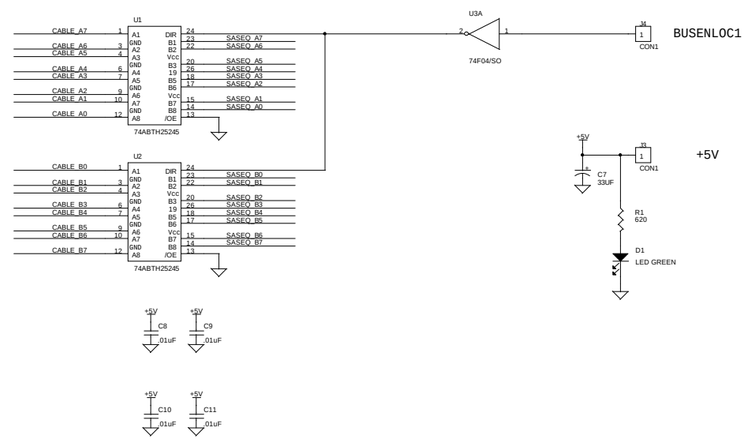

Title	Auxiliary SASeq Driver Board		
Size D	Document Number 38Z3-110-EB-330460		Rev 1
Date: Thursday, May 20, 2004		Sheet 1 of 1	