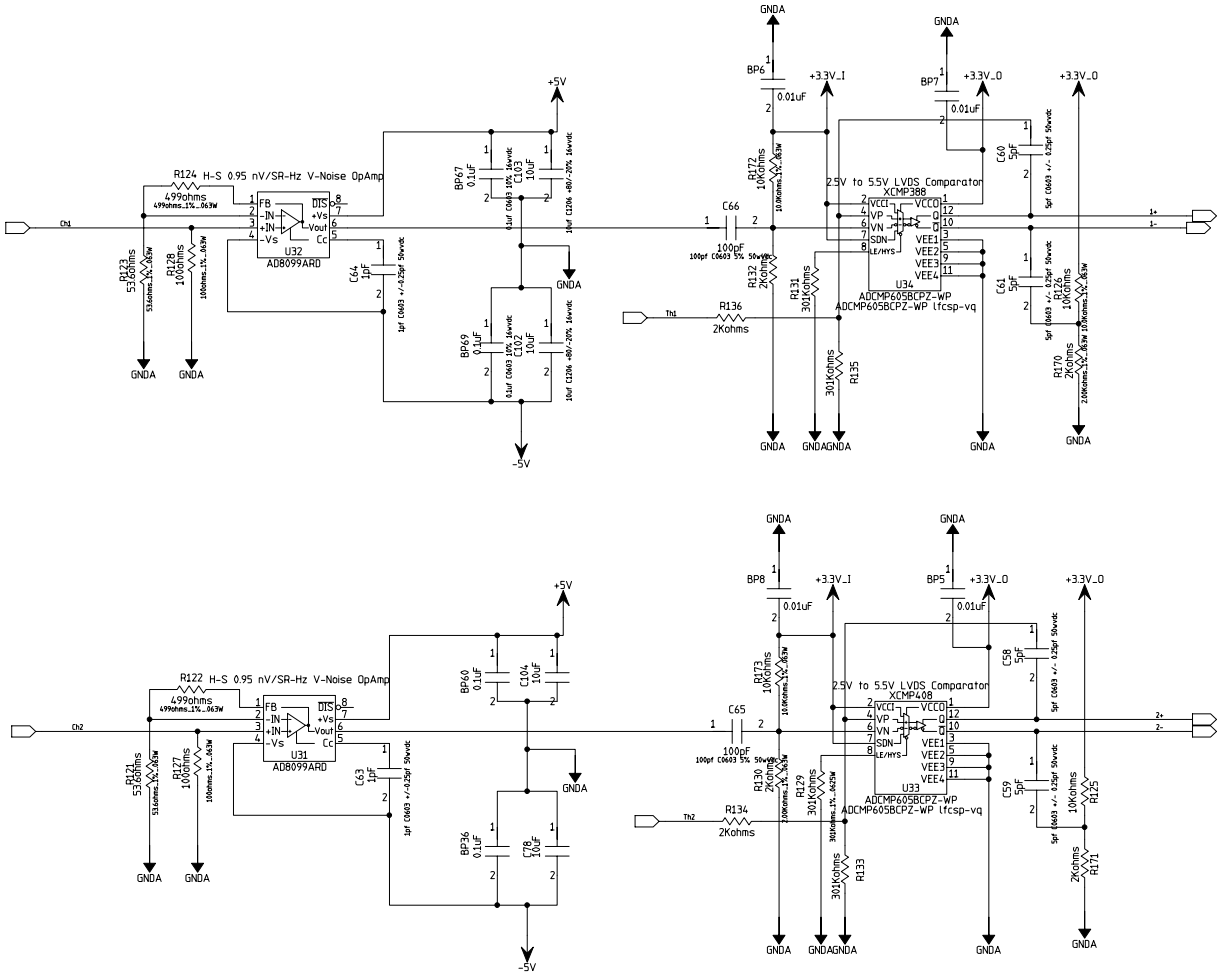


| | | | |
|---|---|---|---|
| MODIFIED 4/8/2008 11:08:35 AM | | | |
| EED Department | ORIGINATOR | M. Utes | DATE 3/23/07 |
| | DRAWN | M. Utes | DATE 3/23/07 |
| | CHECKED | M. Utes | DATE 3/23/07 |
| | APPROVED | M. Utes | DATE 3/23/07 |

**Fermi National Accelerator Laboratory**
United States Department of Energy

P:\Electronics\PMT\PMT_Sender\PMT_Sender.prj

CHANNELS 1 & 2

| SIZE | DRAWING NUMBER | | REV |
|---|---|---|---|
| D | 0000-ED-173664 | Schematic Page 01 of 09 | A |

H=BND: V=4LA

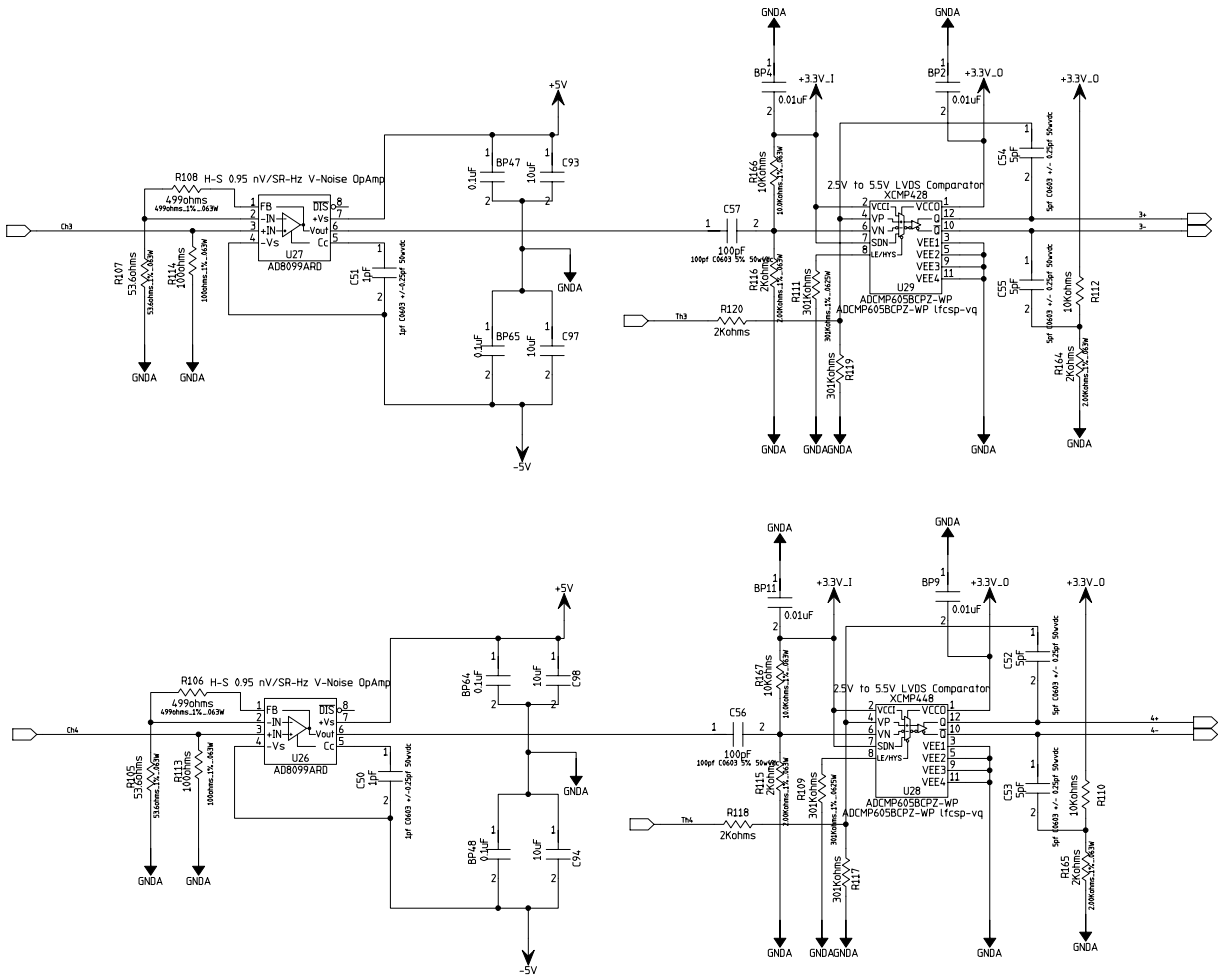


| | | | |
|---|---|---|---|
| MODIFIED 4/8/2008 11:08:35 AM | | | |
| EED Department | ORIGINATOR | M. Utes | DATE 3/23/07 |
| | DRAWN | M. Utes | DATE 3/23/07 |
| | CHECKED | M. Utes | DATE 3/23/07 |
| | APPROVED | M. Utes | DATE 3/23/07 |

**Fermi National Accelerator Laboratory**
United States Department of Energy

P:\Electronics\PMT\PMT_Sender\PMT_Sender.prj

CHANNELS 3 & 4

| SIZE | DRAWING NUMBER | | REV |
|---|---|---|---|
| D | 0000-ED-173664 | Schematic Page 02 of 09 | A |

H=BND: V=4LA

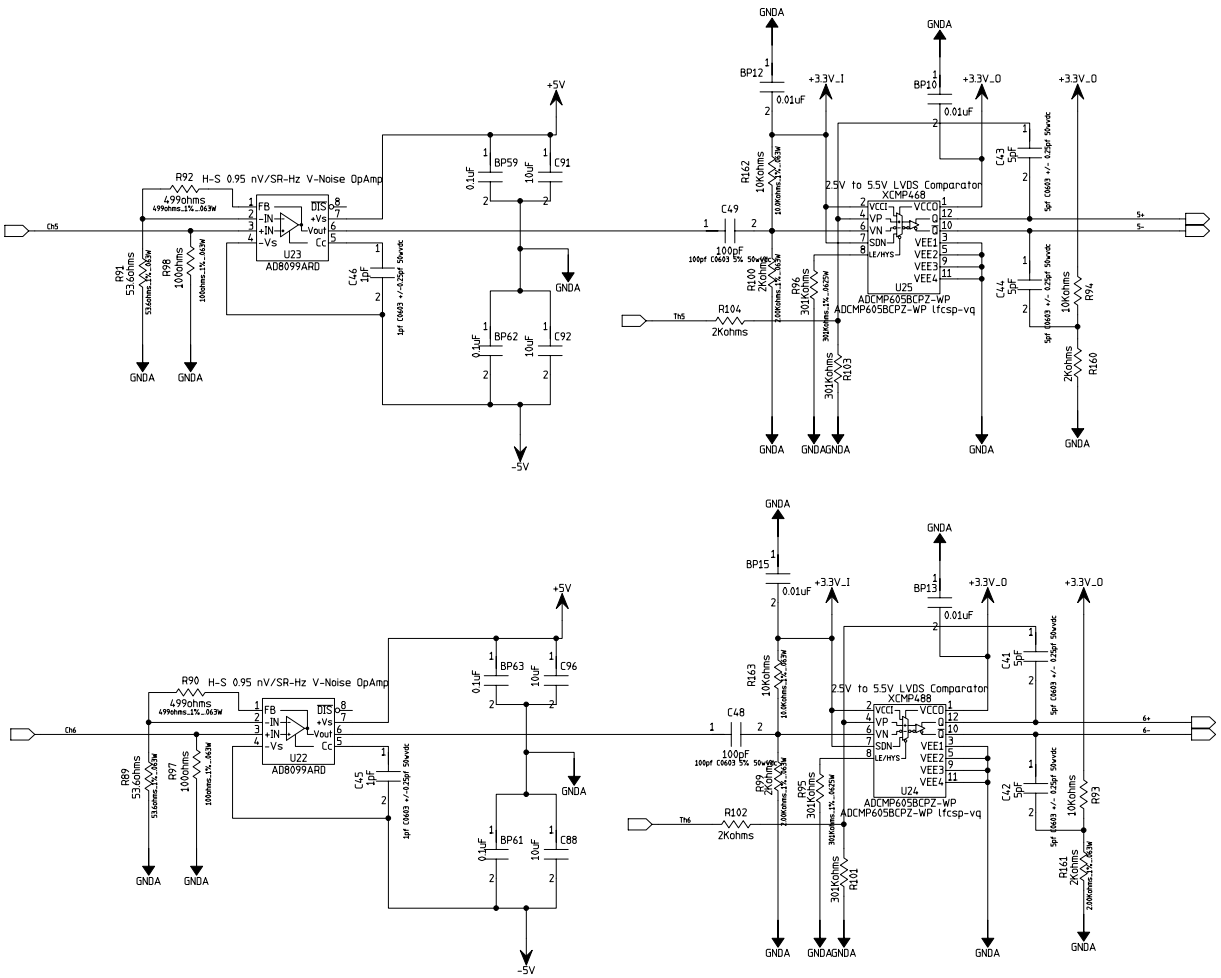


| | | | |
|---|---|---|---|
| MODIFIED 4/8/2008 11:08:35 AM | | | |
| EED Department | ORIGINATOR | M. Utes | DATE 3/23/07 |
| | DRAWN | M. Utes | DATE 3/23/07 |
| | CHECKED | M. Utes | DATE 3/23/07 |
| | APPROVED | M. Utes | DATE 3/23/07 |

**Fermi National Accelerator Laboratory**
United States Department of Energy

P:\Electronics\PMT\PMT_Sender\PMT_Sender.prj

CHANNELS 5 & 6

| SIZE | DRAWING NUMBER | | REV |
|---|---|---|---|
| D | 0000-ED-173664 | Schematic Page 03 of 09 | A |

H=BND: V=4LA

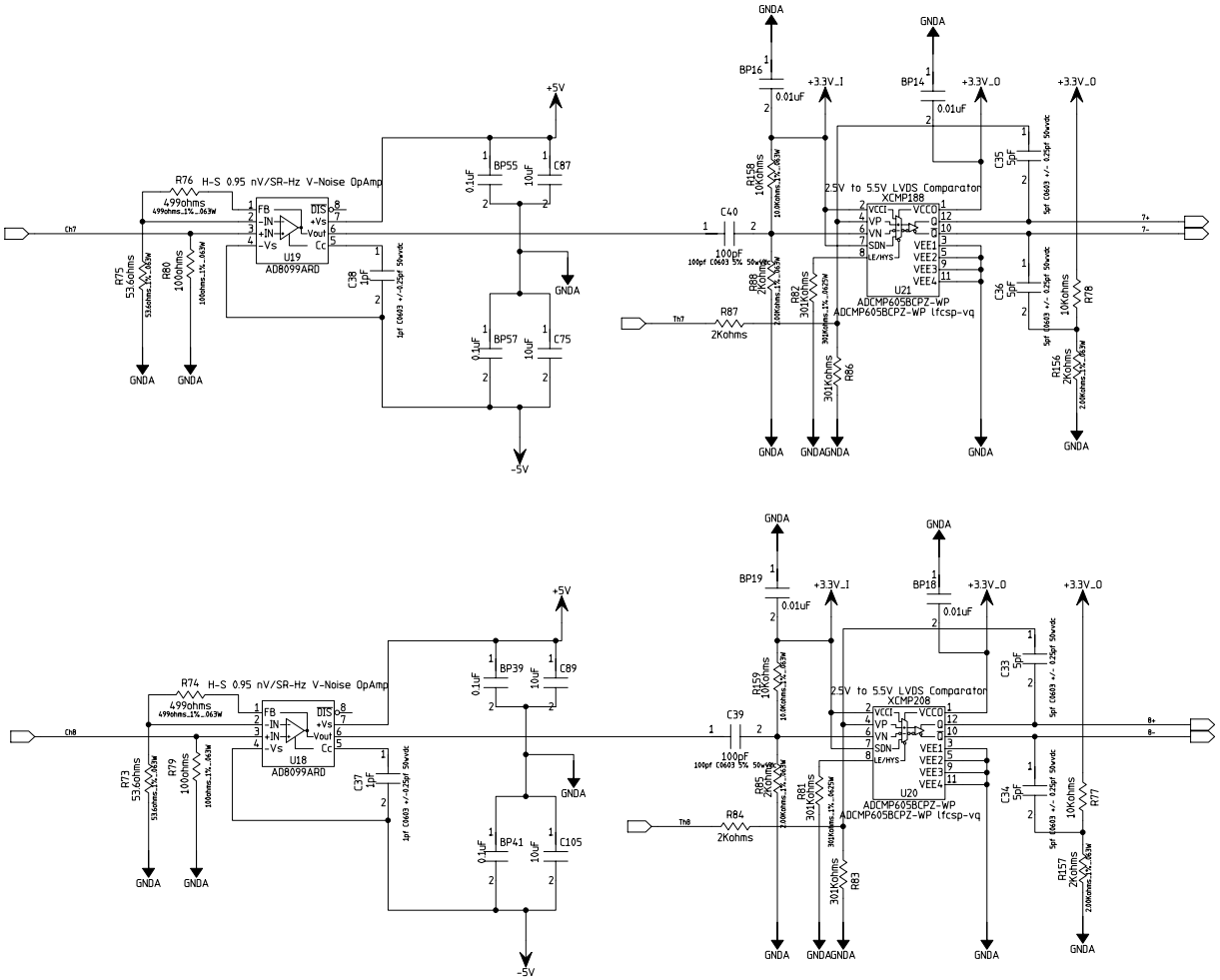


| | | | |
|---|---|---|---|
| MODIFIED 4/8/2008 11:08:35 AM | | | |
| EED Department | ORIGINATOR | M. Utes | DATE 3/23/07 |
| | DRAWN | M. Utes | DATE 3/23/07 |
| | CHECKED | M. Utes | DATE 3/23/07 |
| | APPROVED | M. Utes | DATE 3/23/07 |

**Fermi National Accelerator Laboratory**
United States Department of Energy

P:\Electronics\PMT\PMT_Sender\PMT_Sender.prj

CHANNELS 7 & 8

| SIZE | DRAWING NUMBER | REV |
|---|---|---|
| D | 0000-ED-173664 Schematic Page 04 of 09 | A |

H=BND: V=4LA

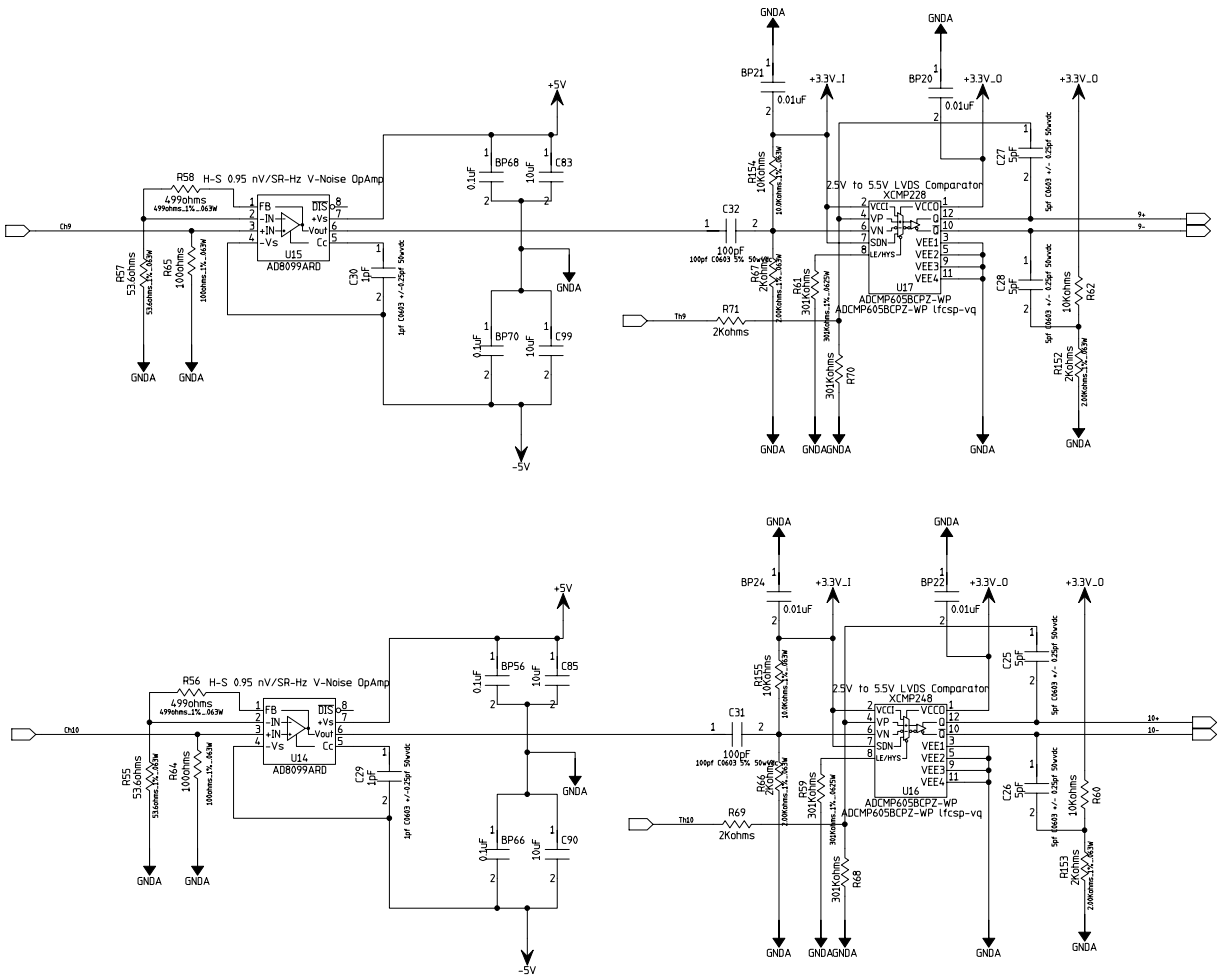


| | | | |
|---|---|---|---|
| MODIFIED 4/8/2008 11:08:35 AM | | | |
| EED Department | ORIGINATOR | M. Utes | DATE 3/23/07 |
| | DRAWN | M. Utes | DATE 3/23/07 |
| | CHECKED | M. Utes | DATE 3/23/07 |
| | APPROVED | M. Utes | DATE 3/23/07 |

**Fermi National Accelerator Laboratory**
United States Department of Energy

P:\Electronics\PMT\PMT_Sender\PMT_Sender.prj

CHANNELS 9 & 10

| SIZE | DRAWING NUMBER | | REV |
|---|---|---|---|
| D | 0000-ED-173664 | Schematic Page 05 of 09 | A |

H=BND: V=4LA

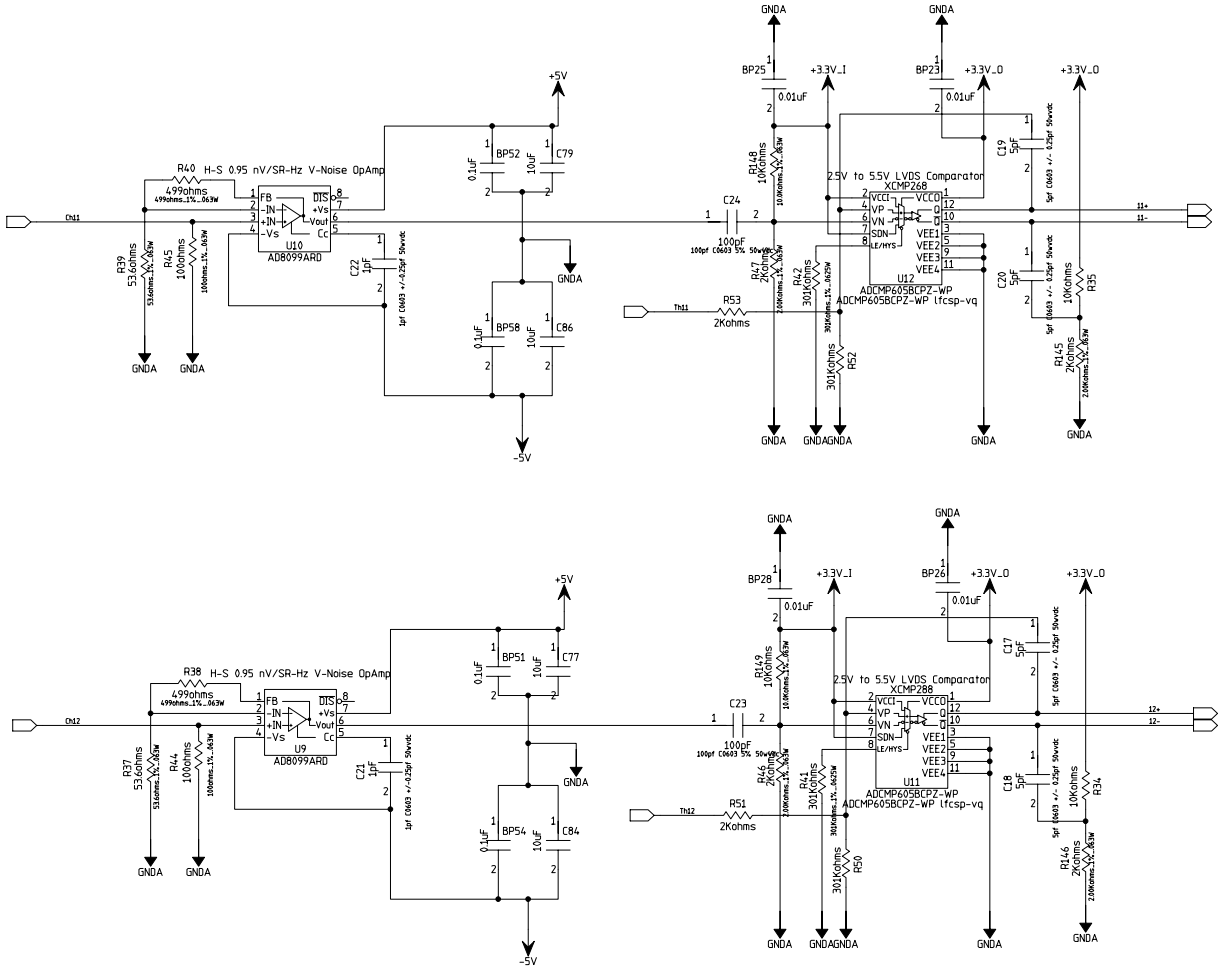


| | | | |
|---|---|---|---|
| MODFIED 4/8/2008 11:08:35 AM | | | |
| EED Department | ORIGINATOR | M. Utes | DATE 3/23/07 |
| | DRAWN | M. Utes | DATE 3/23/07 |
| | CHECKED | M. Utes | DATE 3/23/07 |
| | APPROVED | M. Utes | DATE 3/23/07 |

**Fermi National Accelerator Laboratory**
United States Department of Energy

P:\Electronics\PMT\PMT_Sender\PMT_Sender.prj

CHANNELS 11 & 12

| SIZE | DRAWING NUMBER | REV |
|---|---|---|
| D | 0000-ED-173664 Schematic Page 06 of 09 | A |

H=BND: V=4LA

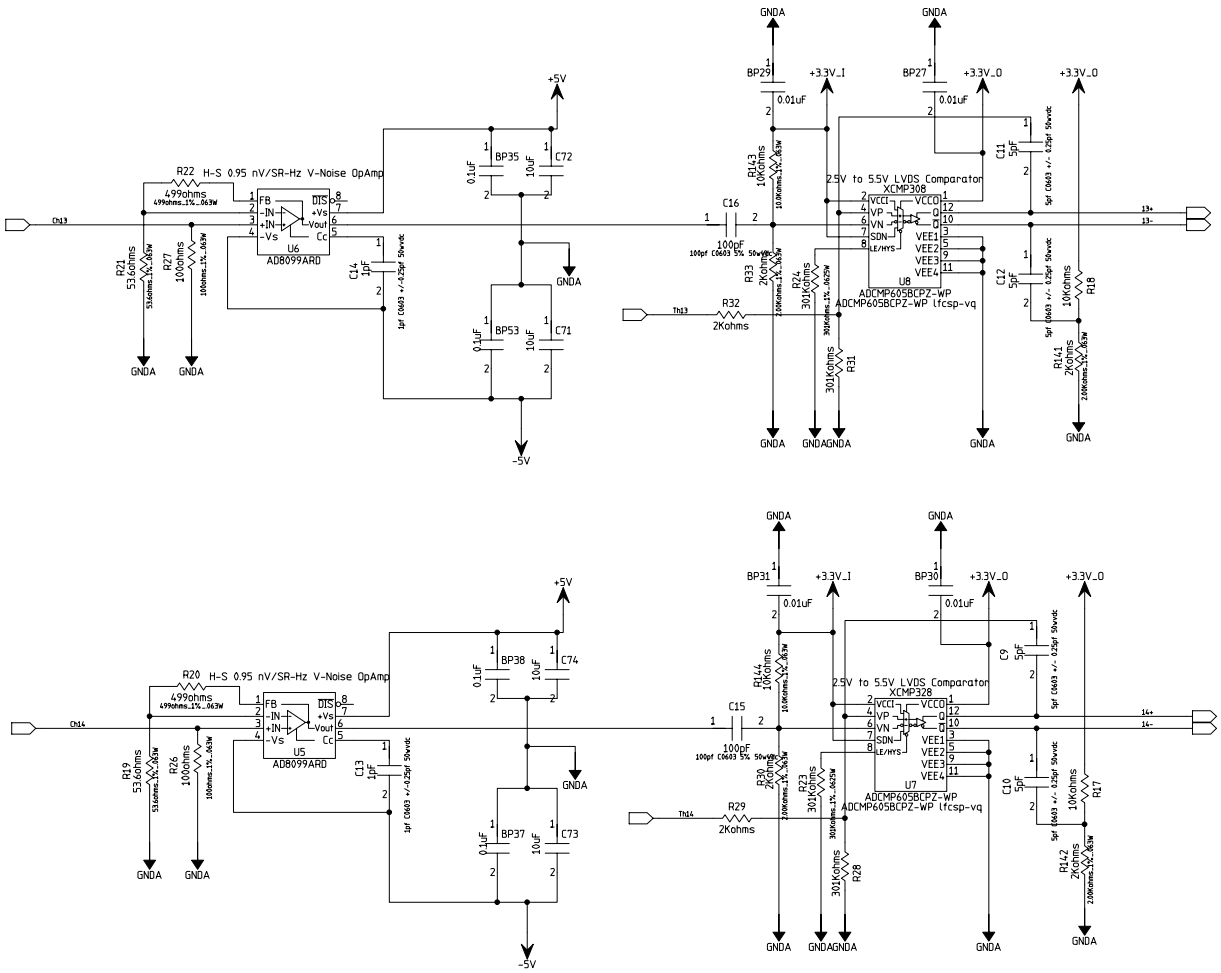


| | | | |
|---|---|---|---|
| MODIFIED 4/8/2008 11:08:35 AM | | | |
| EED Department | ORIGINATOR | M. Utes | DATE 3/23/07 |
| | DRAWN | M. Utes | DATE 3/23/07 |
| | CHECKED | M. Utes | DATE 3/23/07 |
| | APPROVED | M. Utes | DATE 3/23/07 |

**Fermi National Accelerator Laboratory**
United States Department of Energy

P:\Electronics\PMT\PMT_Sender\PMT_Sender.prj

CHANNELS 13 & 14

| SIZE | DRAWING NUMBER | REV |
|---|---|---|
| D | 0000-ED-173664 Schematic Page 07 of 09 | A |

H+BND: V+4LA

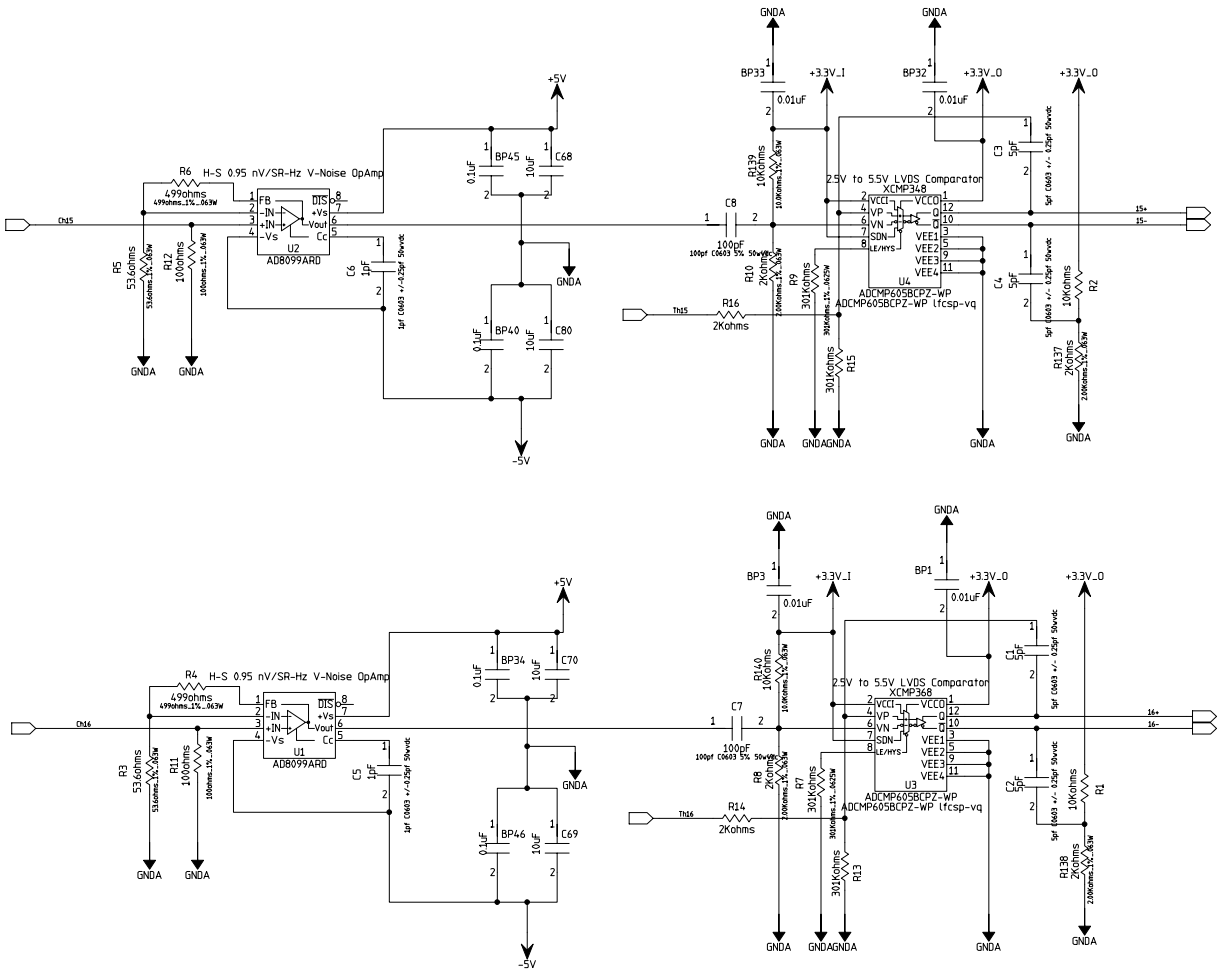


| | | | |
|---|---|---|---|
| MODIFIED 4/8/2008 11:08:35 AM | | | |
| EED Department | ORIGINATOR | M. Utes | DATE 3/23/07 |
| | DRAWN | M. Utes | DATE 3/23/07 |
| | CHECKED | M. Utes | DATE 3/23/07 |
| | APPROVED | M. Utes | DATE 3/23/07 |

**Fermi National Accelerator Laboratory**
United States Department of Energy

P:\Electronics\PMT\PMT_Sender\PMT_Sender.prj

CHANNELS 15 & 16

| SIZE | DRAWING NUMBER | | REV |
|---|---|---|---|
| D | 0000-ED-173664 | Schematic Page 08 of 09 | A |

H=BND: V=4LA

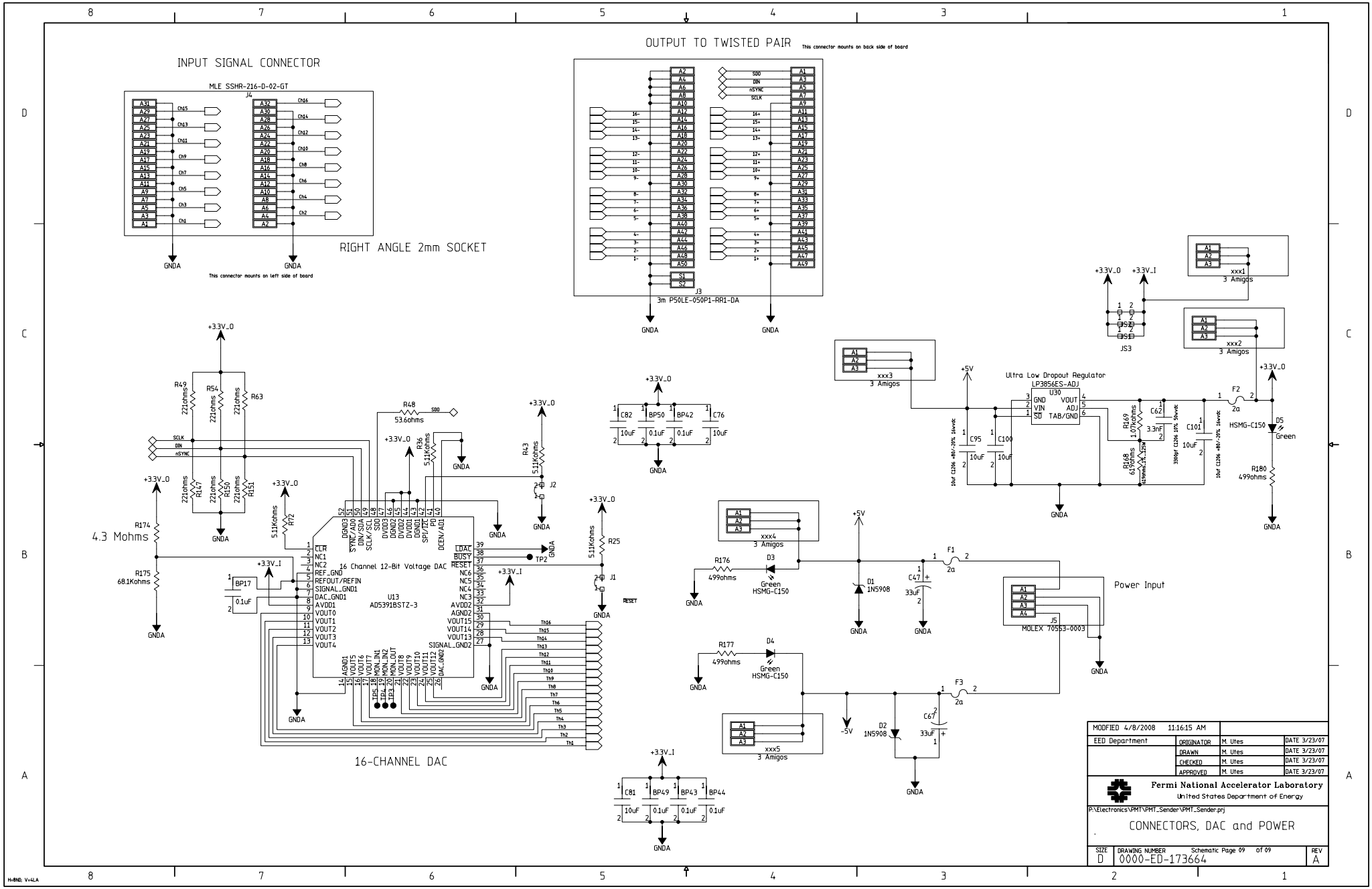
INPUT SIGNAL CONNECTOR
MLE SSHR-216-D-02-GT
J4
RIGHT ANGLE 2mm SOCKET
This connector mounts on left side of board
OUTPUT TO TWISTED PAIR
This connector mounts on back side of board
J3
3m P50LE-050P1-RR1-DA
GNDA
+3.3V_O
+3.3V_I
+5V
-5V
R49
R54
R63
R48
53.6ohms
R36
5.11Kohms
R43
5.11Kohms
R25
5.11Kohms
R174
4.3 Mohms
R175
68.1Kohms
R72
5.11Kohms
BP17
0.1uF
J2
J1
TP2
16 Channel 12-Bit Voltage DAC
U13
AD5391BSTZ-3
16-CHANNEL DAC
C82
BP50
BP42
C76
10uF
0.1uF
C81
BP49
BP43
BP44
xxx1
3 Amigos
xxx2
3 Amigos
xxx3
3 Amigos
xxx4
3 Amigos
xxx5
3 Amigos
Ultra Low Dropout Regulator
LP3856ES-ADJ
U30
GND
VIN
SD
VOUT
ADJ
TAB/GND
C95
C100
C62
3.3nF
C101
10uF
R169
1.07Kohms
R168
619ohms
F2
2a
HSMG-C150
D5
Green
R180
499ohms
R176
499ohms
D3
Green
HSMG-C150
D1
1N5908
C47
33uF
F1
2a
Power Input
J5
MOLEX 70553-0003
R177
499ohms
D4
Green
HSMG-C150
D2
1N5908
C67
33uF
F3
2a
MODFIED 4/8/2008 11:16:15 AM
EED Department
ORIGINATOR M. Utes DATE 3/23/07
DRAWN M. Utes DATE 3/23/07
CHECKED M. Utes DATE 3/23/07
APPROVED M. Utes DATE 3/23/07
Fermi National Accelerator Laboratory
United States Department of Energy
P:\Electronics\PMT\PMT_Sender\PMT_Sender.prj
CONNECTORS, DAC and POWER
SIZE D
DRAWING NUMBER 0000-ED-173664
Schematic Page 09 of 09
REV A
H=8ND; V=4LA