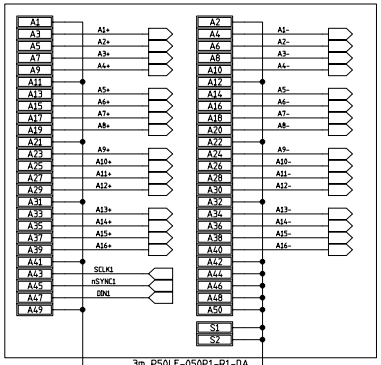

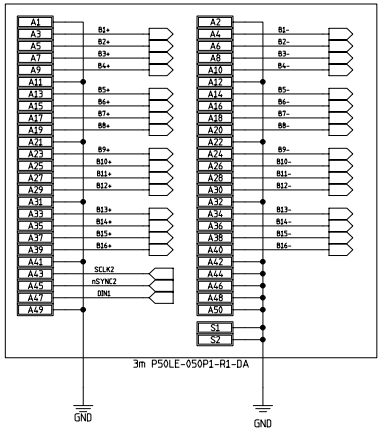

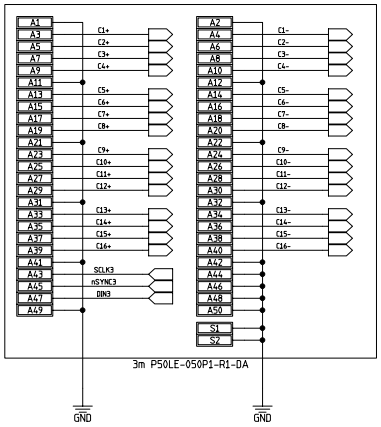

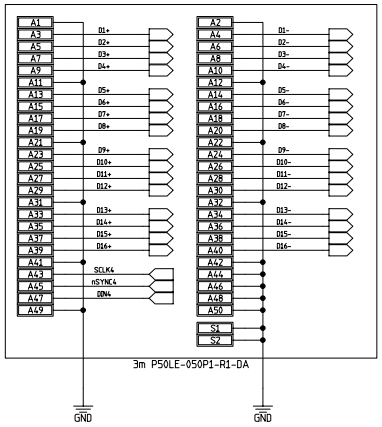

MODFIED 5/4/2007 9:10:37 AM			
EED Department	ORIGINATOR	M. Utes	DATE 3/26/07
	DRAWN	M. Utes	DATE 3/26/07
	CHECKED	⊘Designer_5	DATE ⊘Designer_6
	APPROVED	⊘Designer_7	DATE ⊘Designer_8

Fermi National Accelerator Laboratory
United States Department of Energy

P:\Electronics\PMT\PMT_Receiver_426\PMT_Receiver.prj

LVDS CONNECTORS

SIZE	DRAWING NUMBER	REV
D	drawing number	A

Schematic Page 01 of 09

H=BND: V=4LA

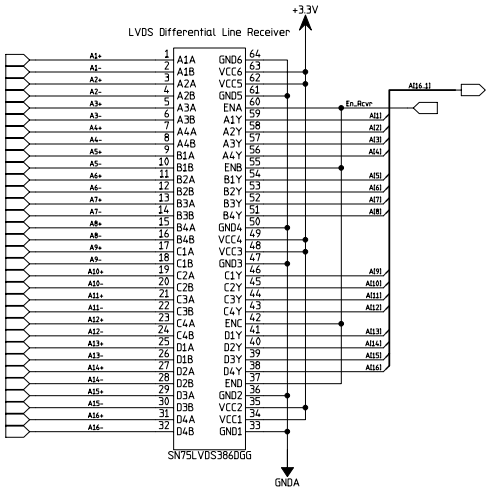

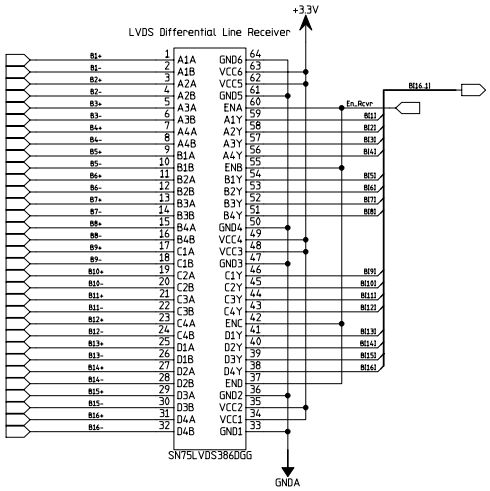

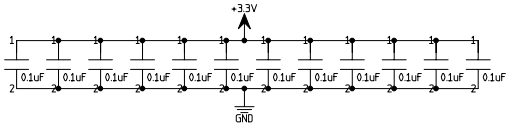

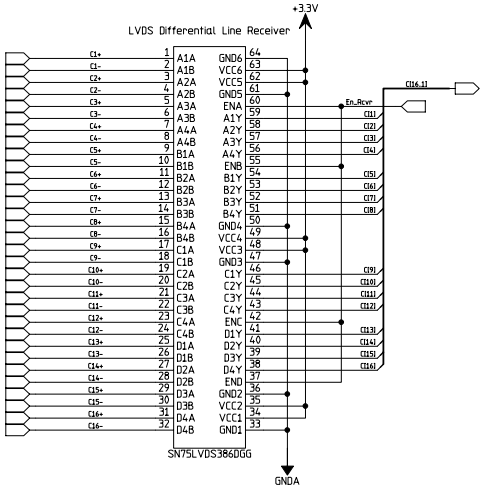

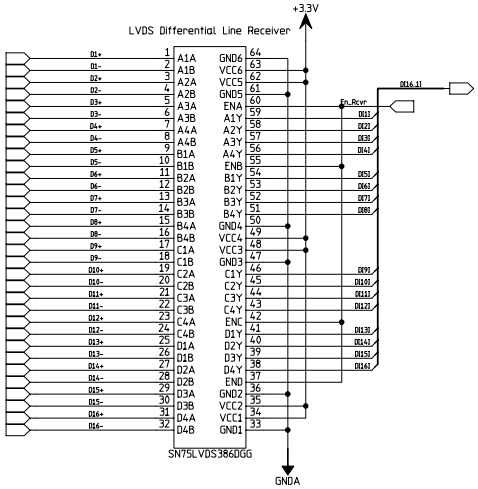

MODIFIED 5/4/2007 9:10:37 AM			
EED Department	ORIGINATOR	M. Utes	DATE 3/26/07
	DRAWN	M. Utes	DATE 3/26/07
	CHECKED	⊘Designer_5	DATE ⊘Designer_6
	APPROVED	⊘Designer_7	DATE ⊘Designer_8

Fermi National Accelerator Laboratory
United States Department of Energy

P:\Electronics\PMT\PMT_Receiver_426\PMT_Receiver.prj

LVDS RECEIVERS

SIZE	DRAWING NUMBER		REV
D	drawing number	Schematic Page 02 of 09	A

H=BND: V=4LA

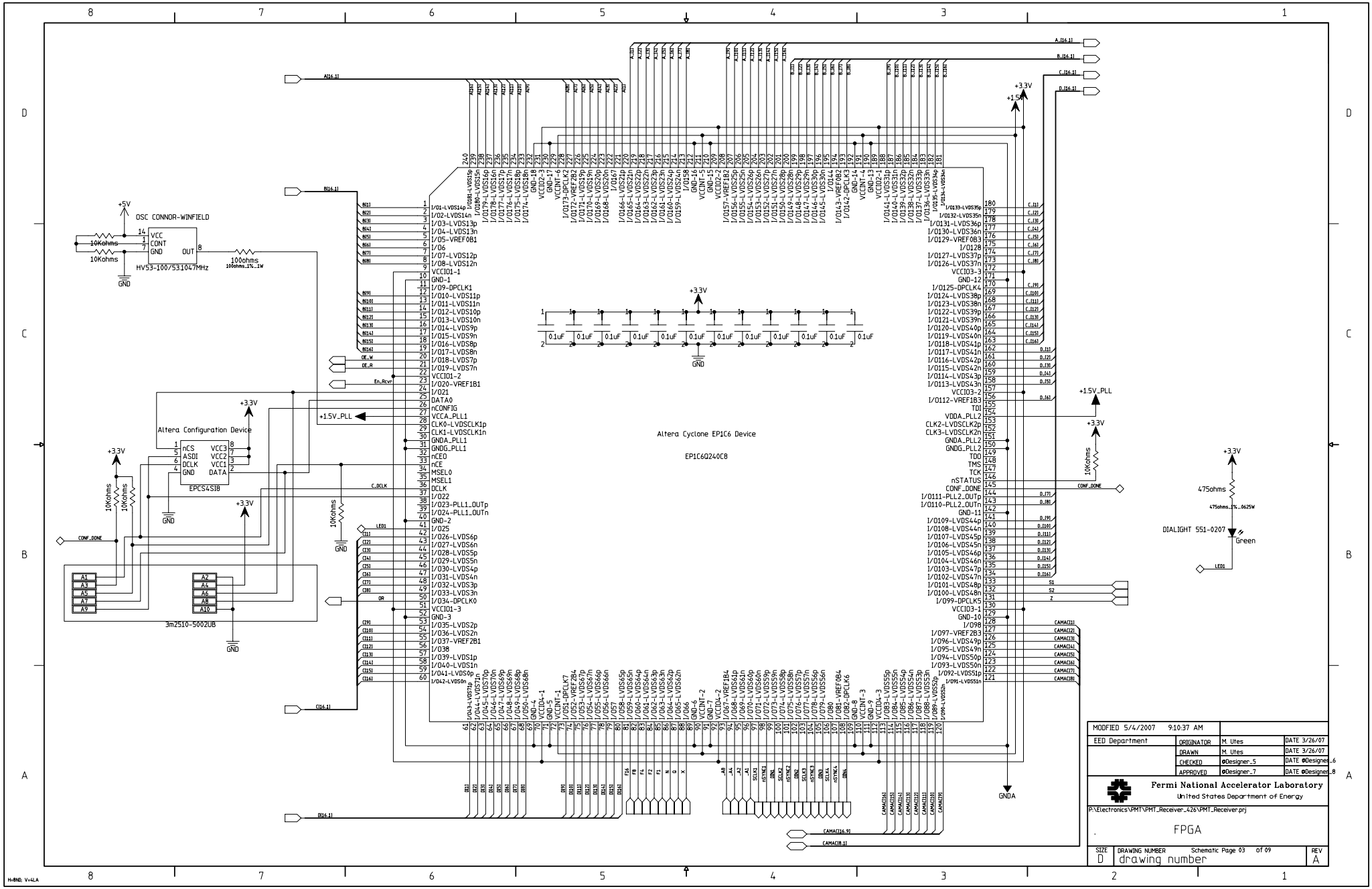
OSC CONNOR-WINFIELD
HV53-100/53.1047MHz
10Kohms
100ohms
Altera Configuration Device
EPCS4SI8
3m2510-5002UB
Altera Cyclone EP1C6 Device
EP1C6Q240C8
0.1uF
+3.3V
+1.5V
+1.5V_PLL
+5V
GND
GNDA
CONF_DONE
C_DCLK
En_Rcvr
OE_W
OE_R
LED1
DIALIGHT 551-0207
Green
475ohms
MODIFIED 5/4/2007 9:10:37 AM
EED Department
ORIGINATOR M. Utes DATE 3/26/07
DRAWN M. Utes DATE 3/26/07
CHECKED ©Designer_5 DATE ©Designer_6
APPROVED ©Designer_7 DATE ©Designer_8
Fermi National Accelerator Laboratory
United States Department of Energy
P:\Electronics\PMT\PMT_Receiver_426\PMT_Receiver.prj
FPGA
SIZE D
DRAWING NUMBER drawing number
Schematic Page 03 of 09
REV A

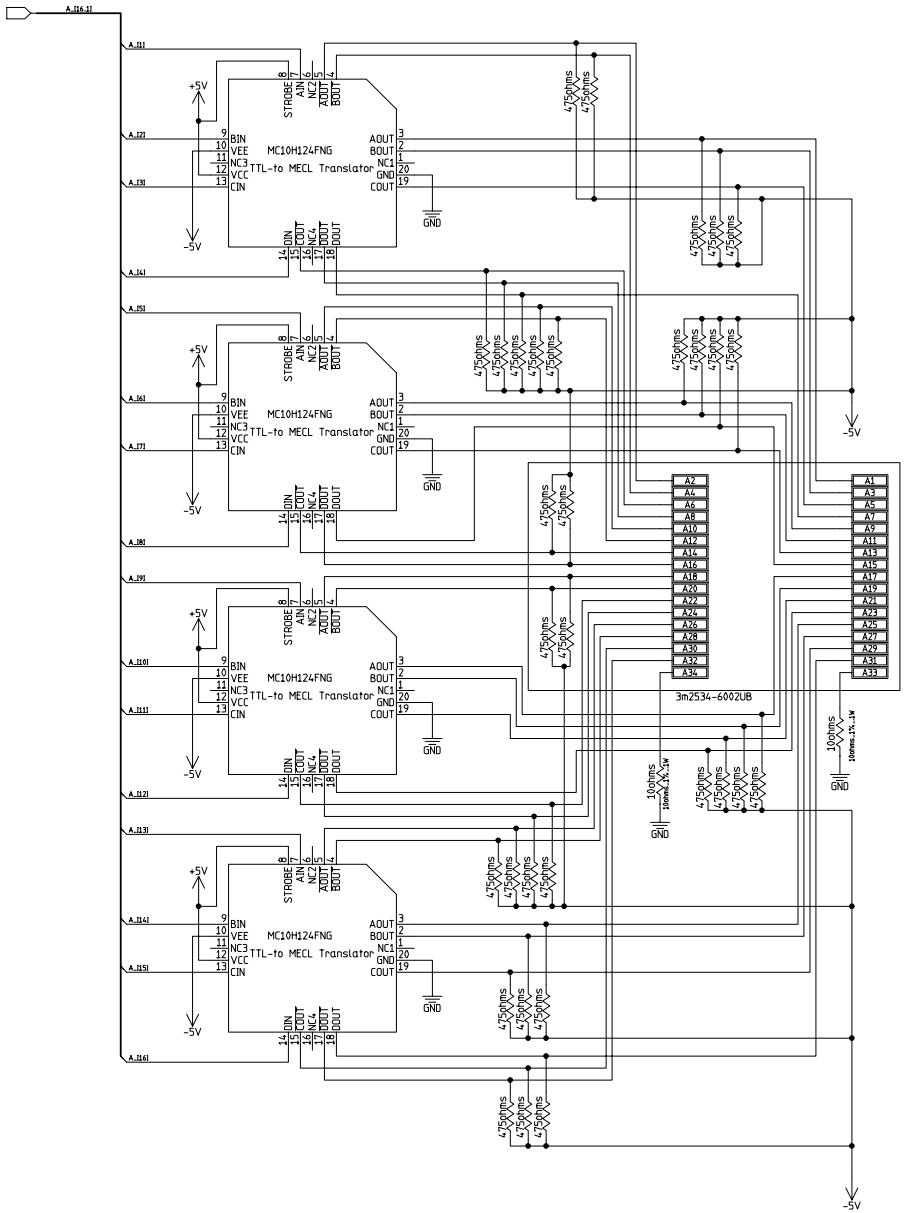

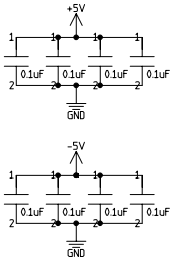

MODIFIED 5/4/2007 9:10:37 AM			
EED Department	ORIGINATOR	M. Utes	DATE 3/26/07
	DRAWN	M. Utes	DATE 3/26/07
	CHECKED	⊘Designer_5	DATE ⊘Designer_6
	APPROVED	⊘Designer_7	DATE ⊘Designer_8

Fermi National Accelerator Laboratory
United States Department of Energy

P:\Electronics\PMT\PMT_Receiver_426\PMT_Receiver.prj

. LVTTL TO ECL TRANSLATION

SIZE	DRAWING NUMBER	REV
D	drawing number	A

Schematic Page 04 of 09

H=BND: V=4LA

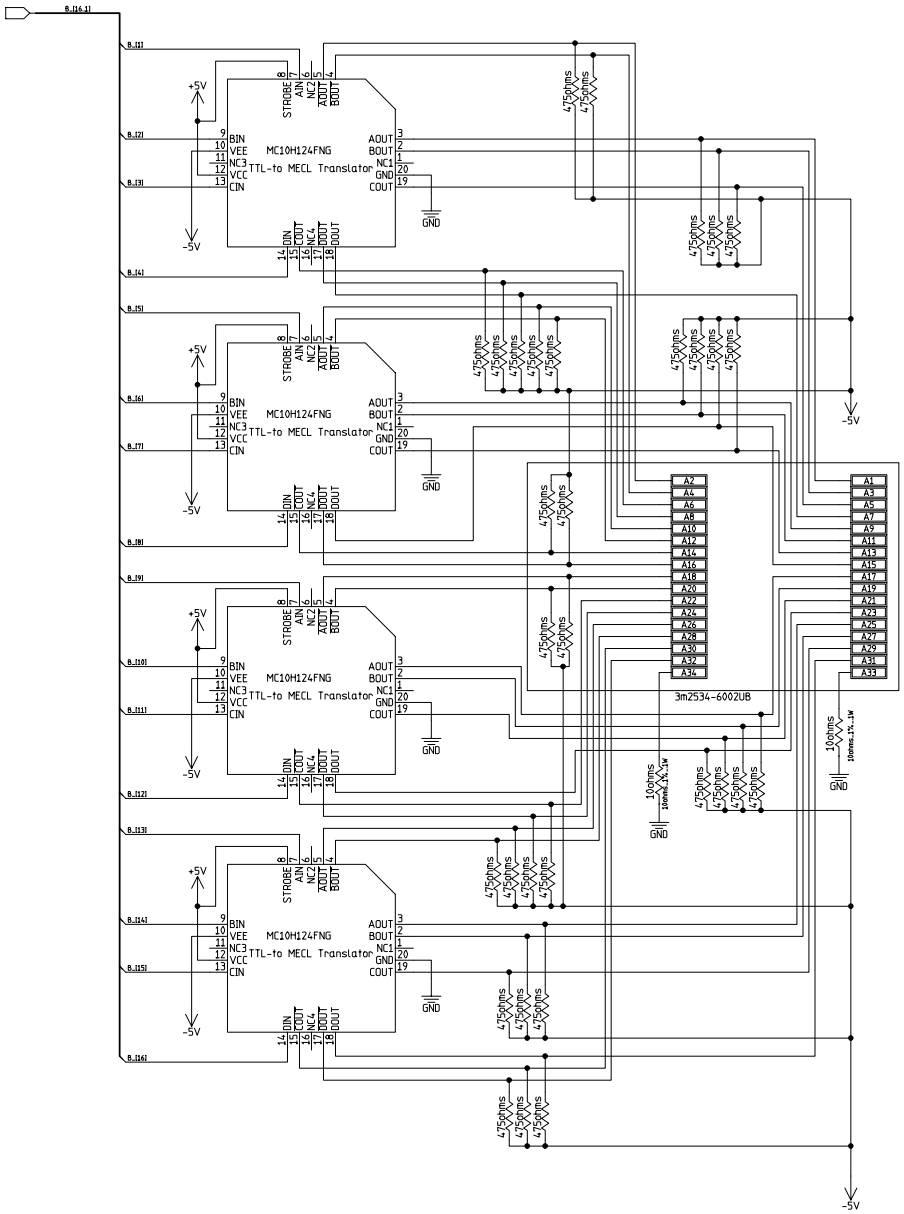

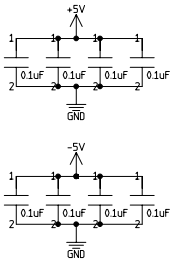

MODIFIED 5/4/2007 9:10:37 AM			
EED Department	ORIGINATOR	M. Utes	DATE 3/26/07
	DRAWN	M. Utes	DATE 3/26/07
	CHECKED	⊘Designer_5	DATE ⊘Designer_6
	APPROVED	⊘Designer_7	DATE ⊘Designer_8

Fermi National Accelerator Laboratory
United States Department of Energy

P:\Electronics\PMT\PMT_Receiver_426\PMT_Receiver.prj

LVTTL TO ECL TRANSLATION

SIZE	DRAWING NUMBER		REV
D	drawing number	Schematic Page 05 of 09	A

H=BND: V=4LA

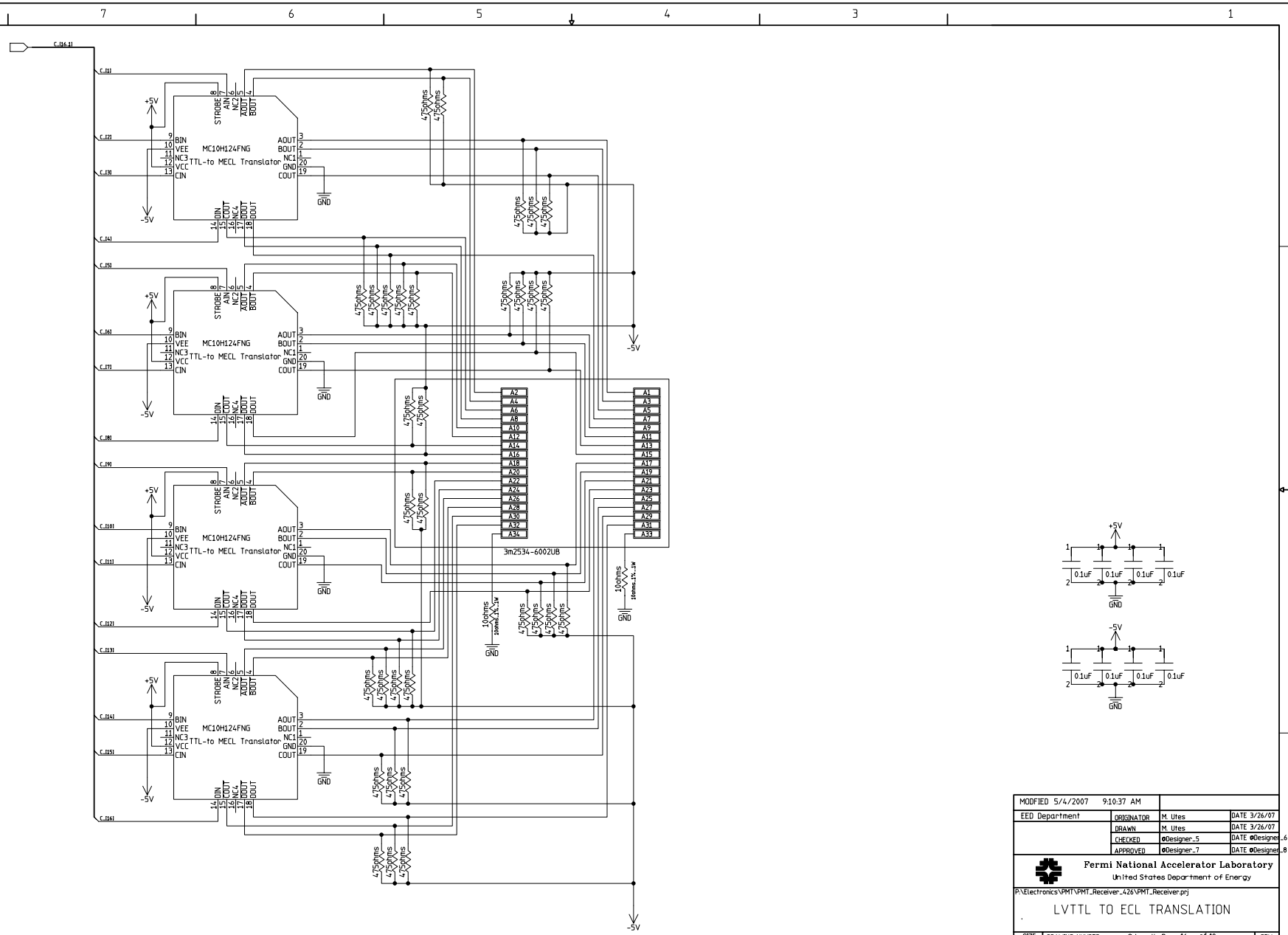

MODIFIED 5/4/2007 9:10:37 AM			
EED Department	ORIGINATOR	M. Utes	DATE 3/26/07
	DRAWN	M. Utes	DATE 3/26/07
	CHECKED	⊘Designer_5	DATE ⊘Designer_6
	APPROVED	⊘Designer_7	DATE ⊘Designer_8

Fermi National Accelerator Laboratory
United States Department of Energy

P:\Electronics\PMT\PMT_Receiver_426\PMT_Receiver.prj

LVTTL TO ECL TRANSLATION

SIZE	DRAWING NUMBER		REV
D	drawing number	Schematic Page 06 of 09	A

H=BND: V=4LA

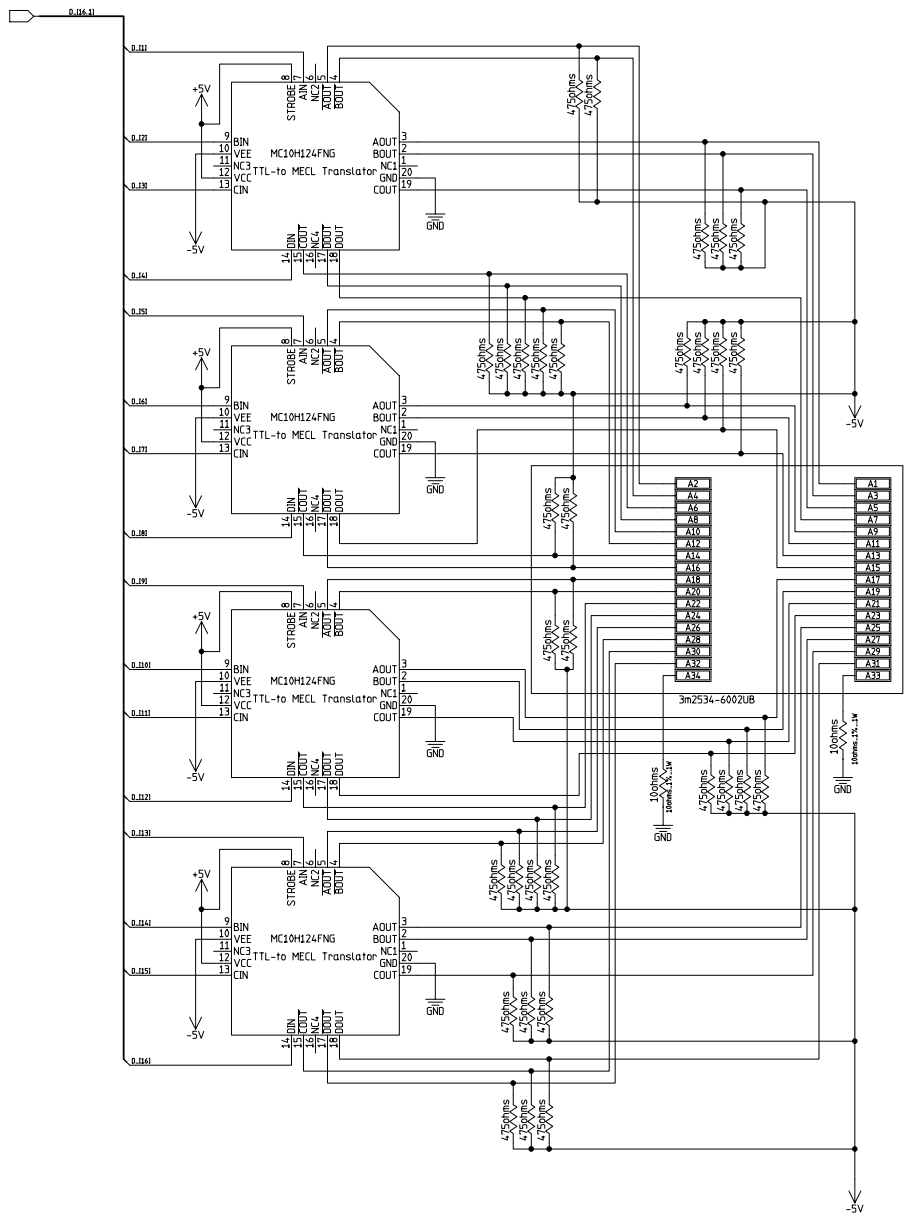

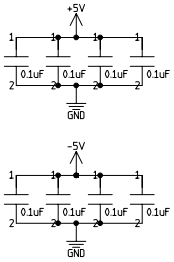

MODIFIED 5/4/2007 9:10:37 AM			
EED Department	ORIGINATOR	M. Utes	DATE 3/26/07
	DRAWN	M. Utes	DATE 3/26/07
	CHECKED	⊘Designer_5	DATE ⊘Designer_6
	APPROVED	⊘Designer_7	DATE ⊘Designer_8

Fermi National Accelerator Laboratory
United States Department of Energy

P:\Electronics\PMT\PMT_Receiver_426\PMT_Receiver.prj

LVTTL TO ECL TRANSLATION

SIZE	DRAWING NUMBER		REV
D	drawing number	Schematic Page 07 of 09	A

H=BND: V=4LA

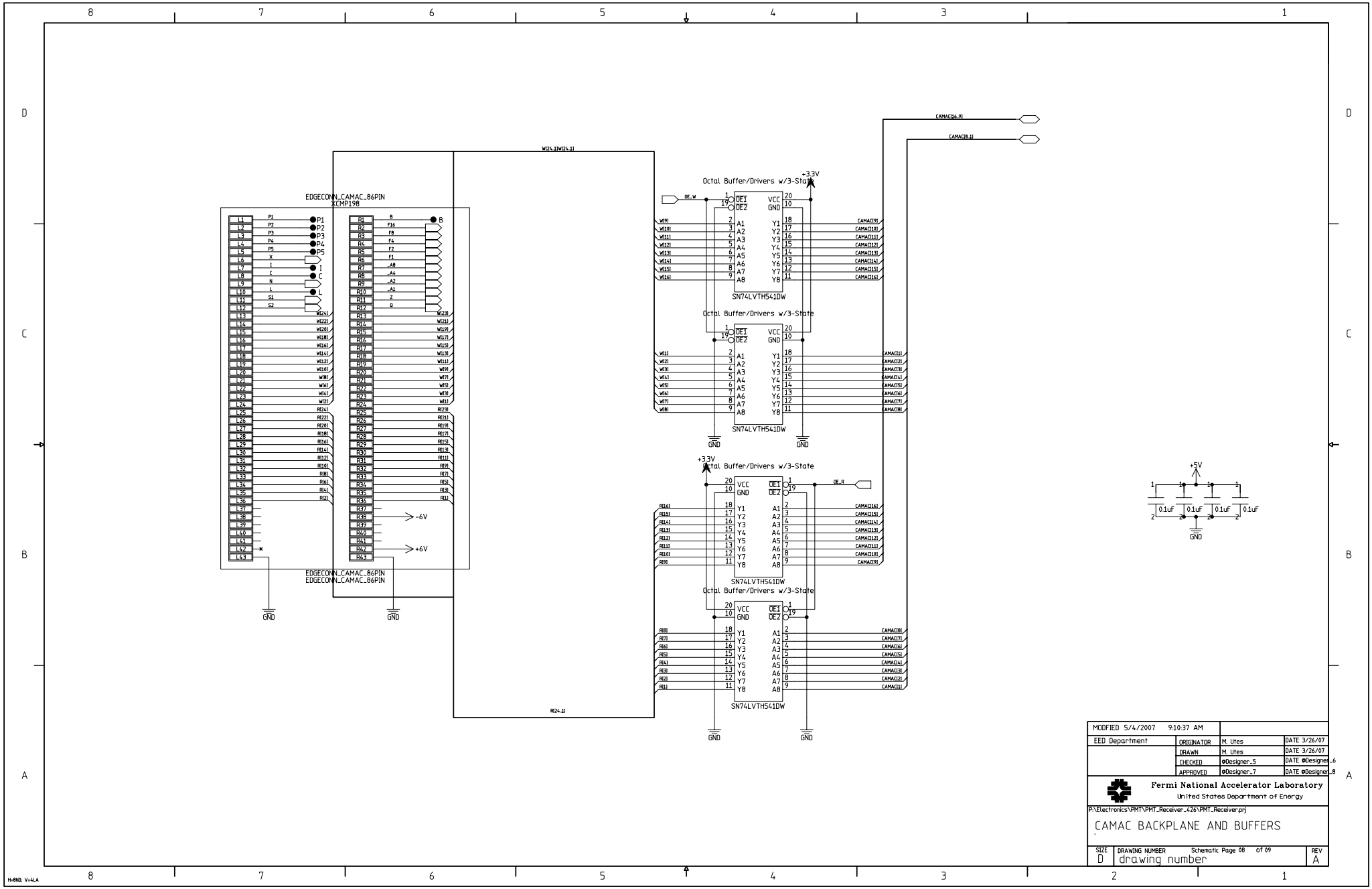

MODIFIED 5/4/2007 9:10:37 AM			
EED Department	ORIGINATOR	M. Utes	DATE 3/26/07
	DRAWN	M. Utes	DATE 3/26/07
	CHECKED	⊘Designer_5	DATE ⊘Designer_6
	APPROVED	⊘Designer_7	DATE ⊘Designer_8

Fermi National Accelerator Laboratory
United States Department of Energy

P:\Electronics\PMT\PMT_Receiver_426\PMT_Receiver.prj

CAMAC BACKPLANE AND BUFFERS

SIZE	DRAWING NUMBER	REV
D	drawing number Schematic Page 08 of 09	A

H=BND: V=4LA

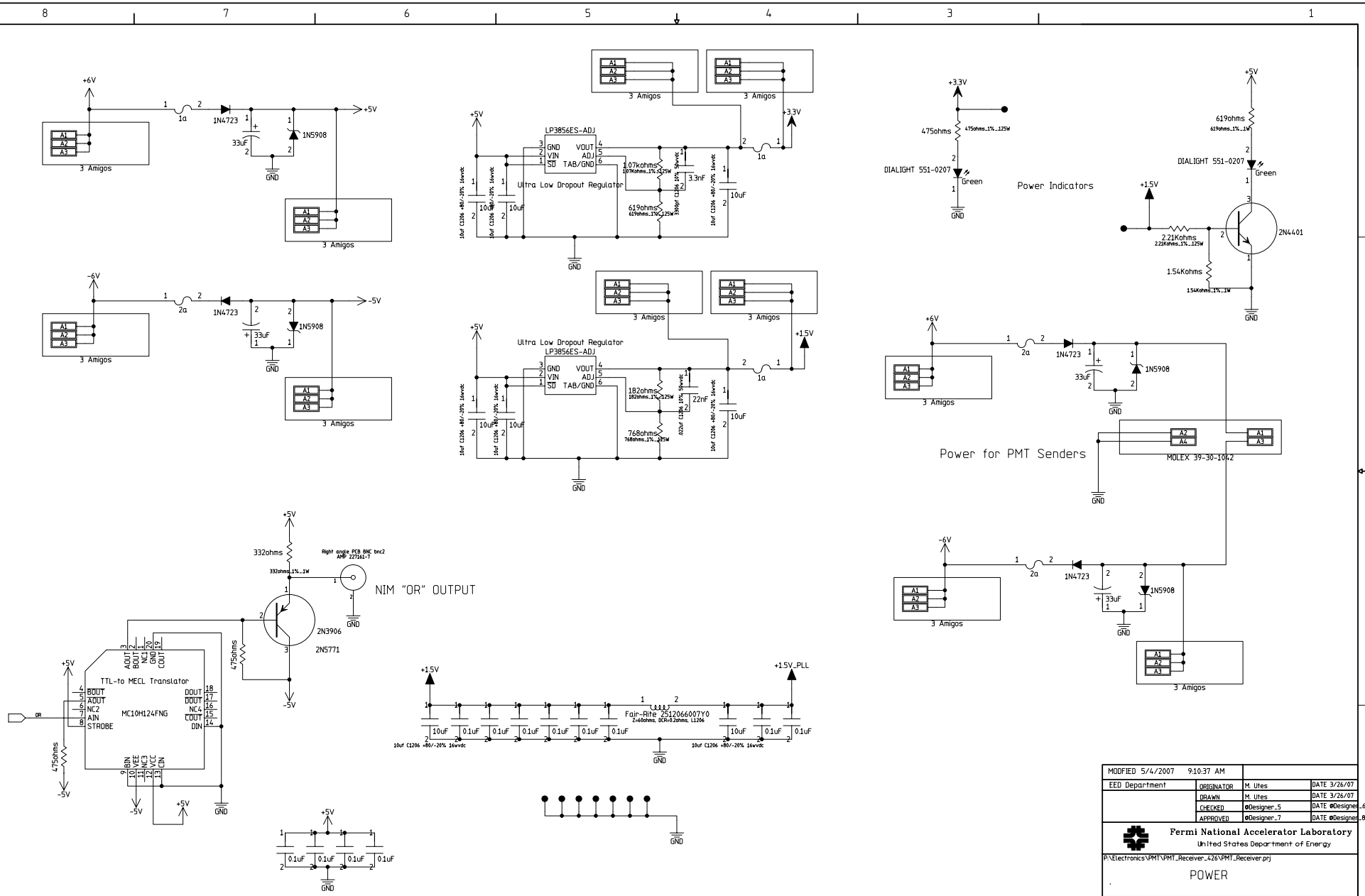
+6V
1a
1N4723
33uF
1N5908
+5V
GND
3 Amigos
-6V
2a
-5V
LP3856ES-ADJ
GND VOUT
VIN ADJ
SD TAB/GND
Ultra Low Dropout Regulator
1.07kohms
619ohms
3.3nF
10uF
+3.3V
+1.5V
182ohms
768ohms
22nF
+3.3V
475ohms
DIALIGHT 551-0207
Green
Power Indicators
619ohms
2.21Kohms
1.54Kohms
2N4401
Power for PMT Senders
MOLEX 39-30-1042
332ohms
Right angle PCB BNC bnc2
AMP 227161-7
NIM "OR" OUTPUT
2N3906
2N5771
TTL-to MECL Translator
MC10H124FNG
BOUT
AOUT
NC2
AIN
STROBE
DOUT
NC4
COUT
DIN
BIN
VEE
NC3
VCC
CIN
OR
+1.5V_PLL
Fair-Rite 2512066007Y0
10uF
0.1uF
MODFIED 5/4/2007 9:10:37 AM
EED Department
ORIGINATOR M. Utes DATE 3/26/07
DRAWN M. Utes DATE 3/26/07
CHECKED DATE
APPROVED DATE
Fermi National Accelerator Laboratory
United States Department of Energy
P:\Electronics\PMT\PMT_Receiver_426\PMT_Receiver.prj
POWER
SIZE D
DRAWING NUMBER drawing number
Schematic Page 09 of 09
REV A