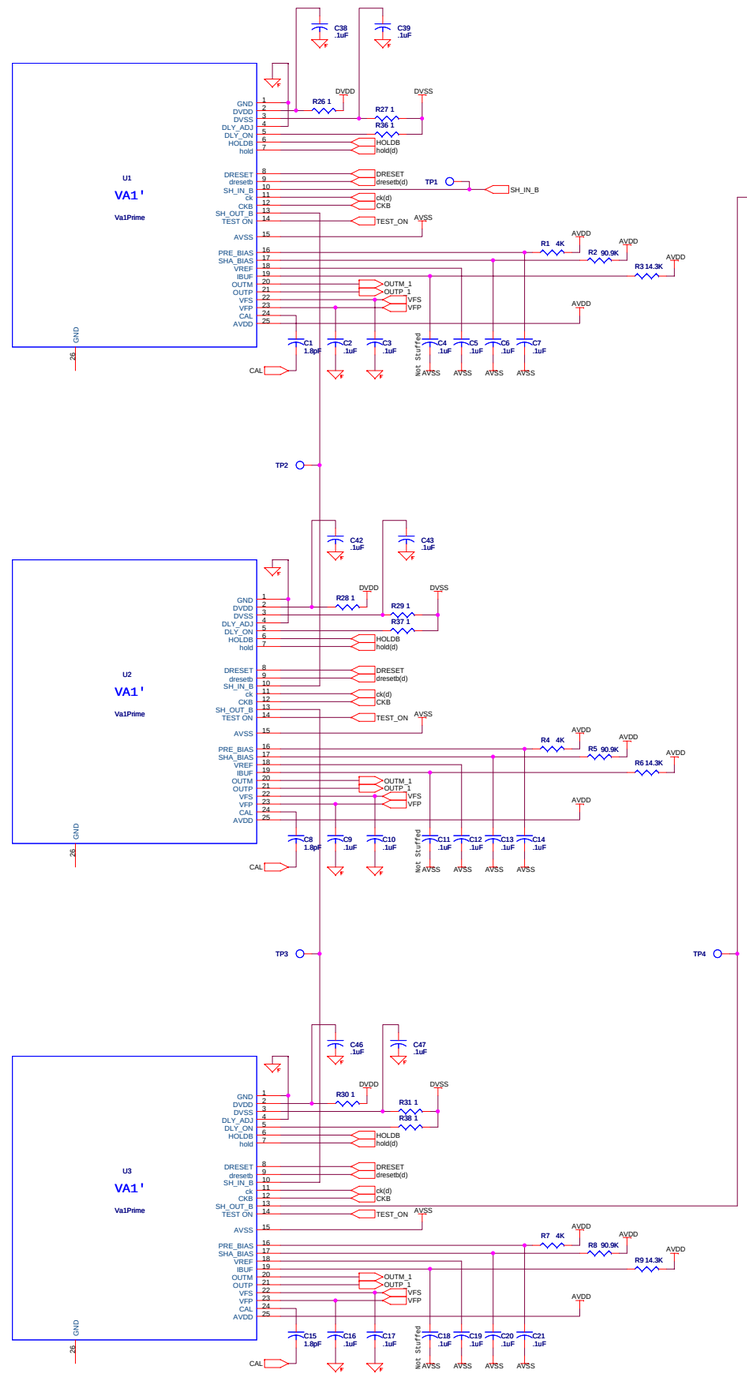

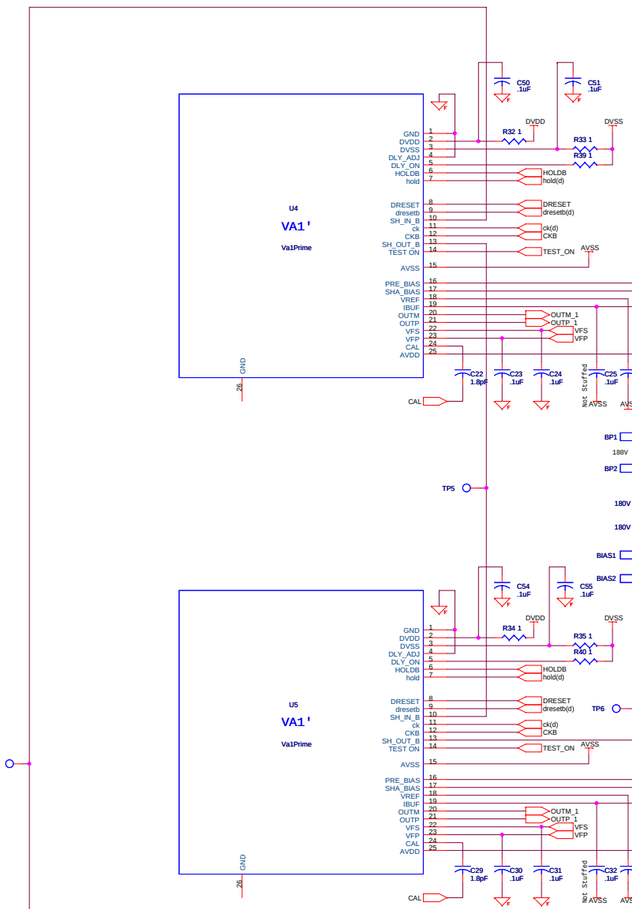

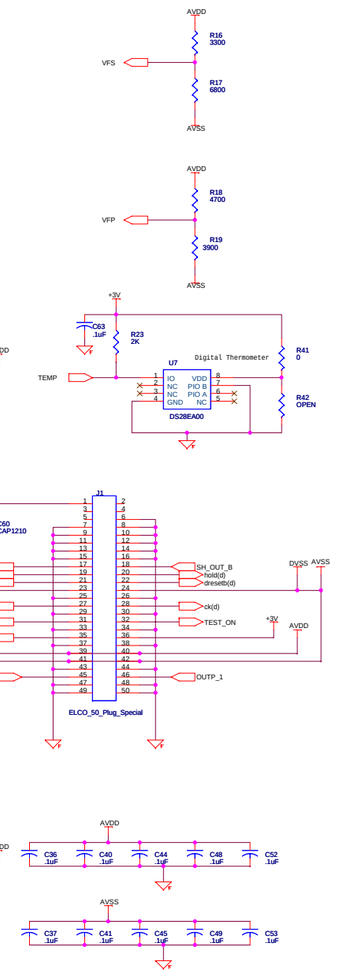

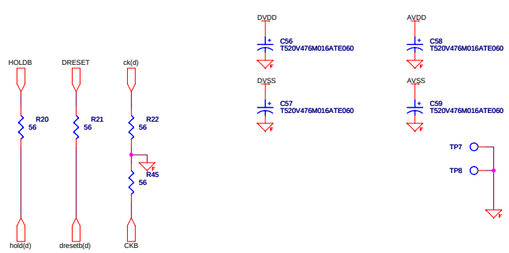

Title	IHEP Hybrid V2		
Size D	Document Number PPD-doc-1164		Rev <RevCode>
Date: Tuesday, January 26, 2010	Sheet 1 of 1		