DØ NOTE 3638

April 7, 1999

DEFINITIONS FOR L3 DATA TRANSFERS FROM THE CFT TRIGGER

THE CFT TRIGGER SYSTEM
NEEDS TO SEND INFORMATION TO THE L3
FOR TESTING AND DEBUGGING.
WHAT DATA
AND
WHICH PROTOCOL IS USED
IS THE SUBJECT OF THIS DØ NOTE

MANUEL I. MARTIN, FRED BORCHERDING

Definitions for L3 Data Transfers from the CFT Trigger

Created by Manuel I. Martin and Fred Borcherding

1. Introduction

The CFT systems collect data from the scintillation fibers via the VLPCs and Analog Front End boards where the signals are digitized according to a predefined scheme. Each analog signal giving birth to two or three digital signals:

- the "amplitude" data is generated by digitization of the integrated pulses by a SVX II and is sent directly to the L3 via dedicated transmission channels and is used in the "off line" event reconstruction.
- the "trigger" data is generated by the SIFT chip by comparing the analog signal against predefined thresholds.

The trigger signals are send to Digital Front End boards. They are then interpreted to create physically meaningful objects that the Trigger Manager could use in its triggering functions. For reasons of bandwidth limitations, the information generated by the Digital Front End boards is not sent directly to the Trigger Managers, rather it is routed to an intermediate stage: the Broadcaster System. Before transmitting information to the Trigger Managers, the Broadcaster boards concentrate and filter the information received from the Digital Front End boards.

Figure 1.- Organization of the CFT and CPS data paths for the Trigger

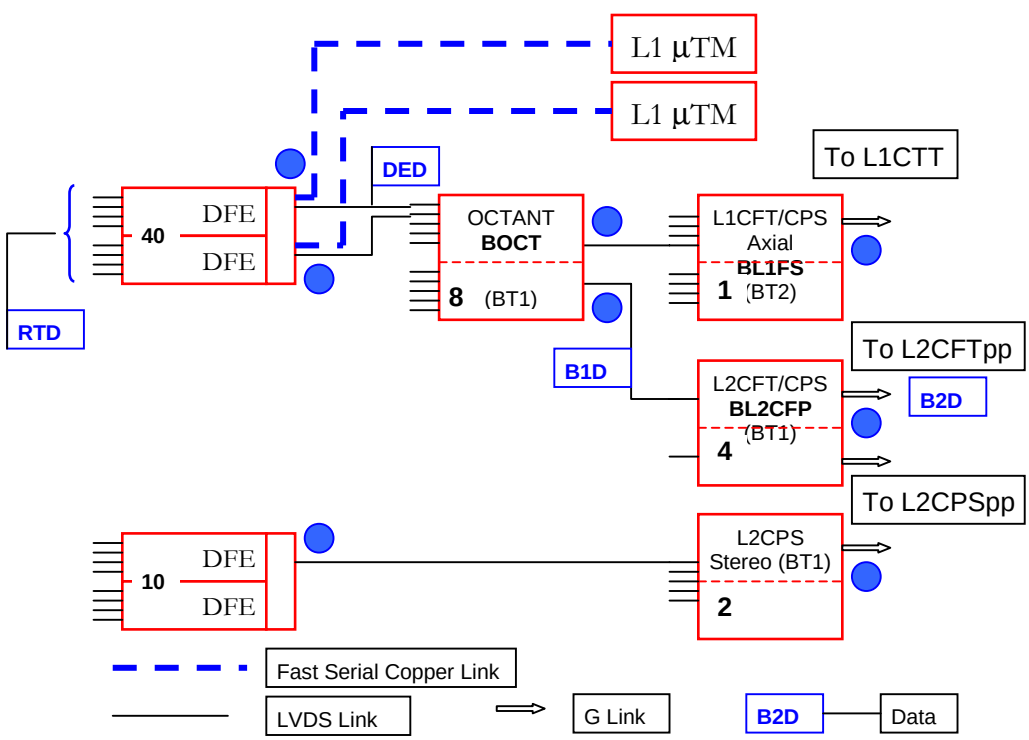

As an example, Figure 1 shows in block diagram form the routes that the signals take to reach the L1 and L2 CTT and CPS Trigger Systems.

Definitions for L3 Data Transfers from the CFT Trigger

In the figure, the points where data sent to the next stage has been modified are clearly marked by a dot. The numbers inside the functional blocks correspond to the number of physical boards required; the mnemonics used is as follows:

- DFE Digital Front End board
- BT1 Broadcaster board Type 1
- BT2 Broadcaster board Type 2

The mnemonics for the data streams are indicated by the text boxes near the symbolic data cables.

From the point of view of both user and designer, it is highly desirable to monitor the behavior of such complex system.

2. Monitoring

2.1. Philosophy

The strength and flexibility of the approach taken in the generation of the trigger information is not without its weakness. In truth, the more flexible and the more stages one system has, the more complex and more prone to errors the system becomes. Because the Trigger System is the "intelligence" of the data acquisition of the detector (the part of the detector that decides which data to take and which to discard) it is necessary to have some means to monitor its behavior. This implies that we must be able to reproduce the operations on and manipulations of the "trigger" data that the system performs in order to make its decisions. Thus, we must be able to interrogate the data before and after it is modified by the system or parts of it. This way, we can submit the data to the same algorithms implemented in the Trigger System and compare the results.

As an example, let us look at the case of the L2CTT. At one level, the system can be interpreted as a single functional block as represented on Fig. 2. The functional block

Figure 2.- The L2CTT as a single functional block

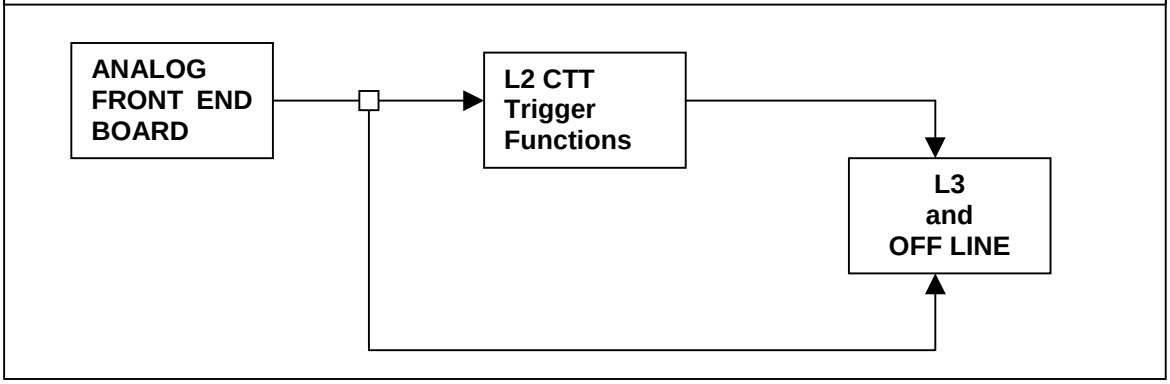

labeled "L2 CTT Trigger Functions" receives as input the same data that the L3: the raw trigger data (RTD) generated by the Analog Front End boards. This data is transformed by the "L2 CTT Trigger Functions" into the final L2 trigger data (L2TD) and is used in the data acquisition decision and made available to the L3. Mathematically:

$$\mathbf{L2TD = TF(RTD)}$$

The L3, or Off Line, has a copy of the input data and results of the L2CTT as well as a image ITF(x) of the function TF(x) and can perform the mirror operation

$$\mathbf{L2TD' = IFT(RTD)}$$

Then, a comparison of L2TD and L2TD' tell us if the L2CTT is performing as expected. From the point of view of the user, this may be sufficient insomuch as he/she is concerned only about the integrity of the data. From the point of view of the designer or the people in charge of the maintenance of the system this is not enough. Using the same example, a look at Fig. 1 shows that the function TF(x) is really broken into several functions

$$\mathbf{TF(x) = L2CT(B2(B1(DE(RTD))))}$$

each one implemented in a different piece of hardware. The raw trigger data and the final trigger data are related by series of sequential operations

$$\mathbf{L2TD = L2CT(B2D)}$$

$$\mathbf{B2D = BT2(B1D)}$$

$$\mathbf{B1D = BT1(DED)}$$

$$\mathbf{DED = DE(RTD)}$$

where the mnemonics used correspond to the ones in Fig. 1. This is shown in functional block

Figure 3.- The L2CTT as a multiple functional blocks

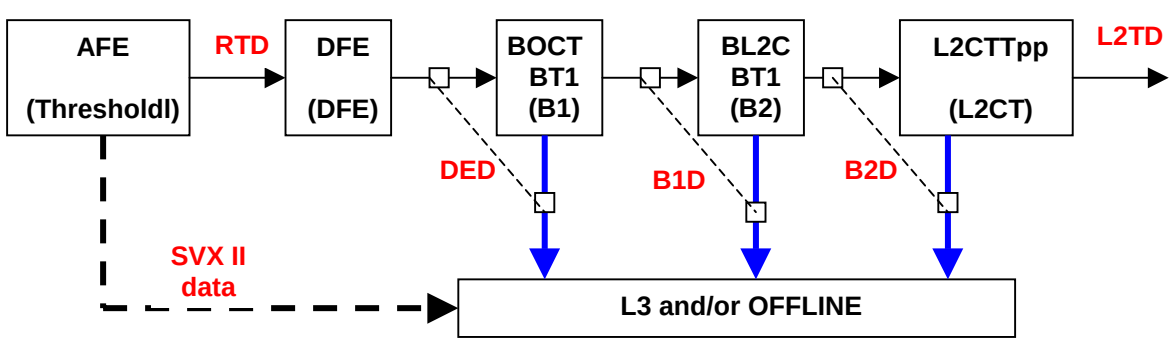

diagram form in Fig. 3.

The lettering inside the boxes give the mnemonics used for the hardware and (in parenthesis) its function. The data transferred to the L3 is also named. The thin dash lines indicate that the input data to the box is duplicated in the output of the same box to the L3.

To perform a correct analysis of the behavior of the L2 CTT trigger, the L3 (or Off Line) must have an image of each of the functions that the hardware performs. It also must have the input and output data of each of the modules. In other words, it is necessary to have a faithful software simulation of the hardware and access to intermediate data. Both requirements must be implemented also to define of the properties of the trigger (turn-on, efficiency, etc.) needed for a proper analysis of the data. The second requirement is achieved by additional data paths between the hardware implementing the trigger functions and the L3.

2.2. Implementation

Almost every board in the CFT/CPS/FPS/FPT can be linked to the L3 via a G Link, the exception being the DFE. If each board were linked to the L3, the simplest implementation will consist in sending a duplicate of every output to the L3. Because the limitations in board space, that it is not possible for the DFE boards. This would implie that the input data to the first Broadcaster boards will no be available. Thus, a different approach is required. To solve this problem, instead of each board sending its output data to the L3 it sends a copy of its input data as shown on Fig. 3. This way no data is lost. That is true also for the DFE board even though the DFE board has no direct connection with the L3. This is possible because the Analog Front End board uses a Virtual SVX II chip to send a copy of the data it sent to the DFE to the L3.

This approach solve two other problems:

- what to do when a particular board sends different information to different subsystems.
- how to inform the L3 of possible transmission errors without making backward data transfers.

3. Data sent to the L3

3.1. The Analog Front End Board

All of the data from the scintillation fibers and the PreShower strips originates on the Analog Front End, AFE, boards. These boards receive, discriminate and digitize the analog signals from the VLPC's. The signals are digitized in SVX2 chips and the digitized values are

read out upon a level 1 accept with the Sequencer boards and VRB boards. The AFE boards also compare the analog signals against one (two) threshold(s) creating a fast digital (RTD) output, which is used later in the trigger. This signal is inserted into the SVX data stream originated from each AFE board with a Virtual SVX (VSVX) chip. The VSVX chip packs the discriminator bits into 8-bit bytes and a header, trailer and SVX addresses. This information is then inserted into the board readout stream as one or more additional SVX chips making it available to the L3. This data is packed into several 8bit bytes.

3.2. The CFT/CPS System

The organization of the CFT/CPS L1 and L2 with the proposed links to L3 is presented on Fig. 4. It shows 11 G Links sending information to the L3. These 11 links are grouped into three distinctive sets, namely: Data 1 (8 G Links), Data 2 (1 G Link) and Data 3 (2 G Links). The protocol followed for these data transfers is the same used for the L2 data transfers which have been explained in detail in DØ Notes 3626 and 3627. The data sent by each set of G Link is described in the next sections.

Figure 4.- Organization of the CFT and CPS data paths for the Trigger

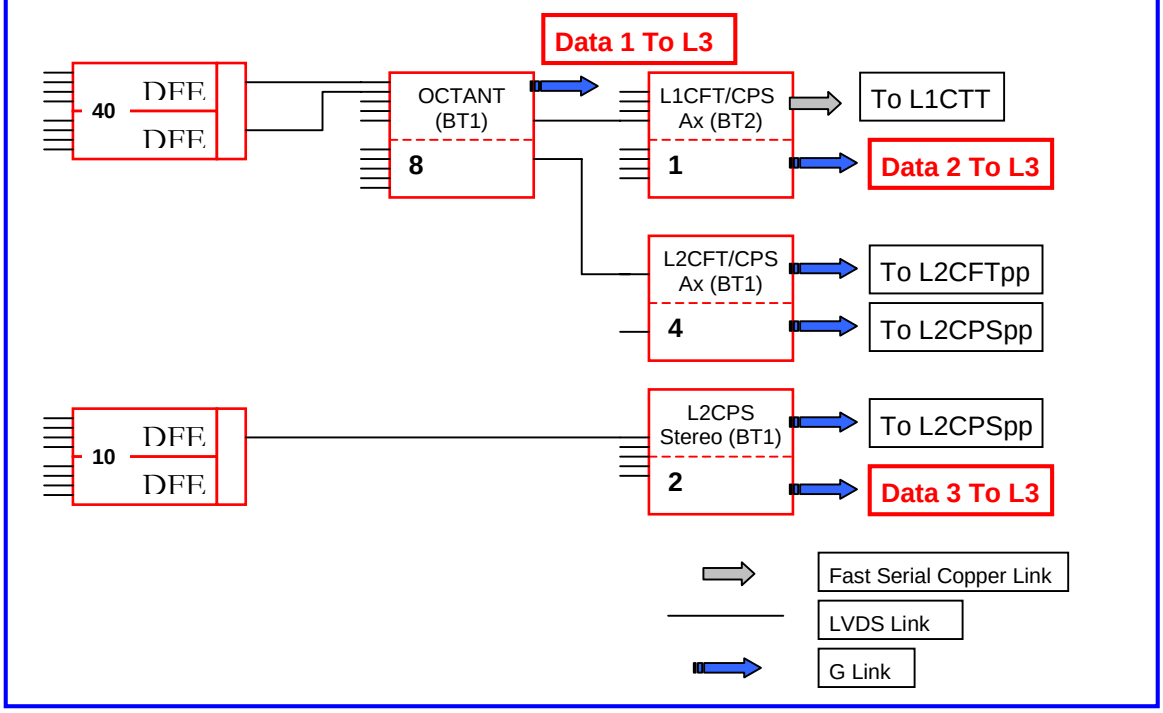

3.2.1. CFT/CPS Axial Data from Octant Cards

The first set of Broadcaster boards receives the RTD from forty DFE boards. Each board receives data from five DFE via two LVDS links creating a virtual octant, and each board receives L1 and L2 data. In the normal mode of operation, the DFE sends a continuos string of L1 data formatted into records consisting of seven 28bit frames. Thus, one Type 1 Broadcaster board receives 1960 bits every 132ns. After a L1 Accept signal is issued, the DFE boards switch functions and sends two consecutive L2 data records; the first dedicated to tracks information (L2CFT) and the second with PS Axial cluster information (L2CPS Axial). The maximum information contained in these two records corresponds to forty-seven tracks and sixteen clusters respectively. This translates into a maximum of (47*12+12 + 34*4 + 28*3)*10 = 7960 bits for the ten records with track information and (16*12 + 8*4 + 28*3)*10 = 3080 bits for ten records with cluster information[1]. Prior to transfer to the L3, this information needs to be reformatted into L2/L3 G Link protocols. This includes repackaging the data in 32 bits words, adding possible communication errors detected, inserting the necessary header and trailer and keeping only pertinent information.

After all is done, the information to be sent to the L3 requires three records as follows:

- Record 1, L1 data — Header (3 words)
  L1 input data (50 words)
  Error Information (1 word)
  Trailer (1 word)

  for a total of 60 words (1,760 bits).

There are 10 data sets, one for each input, where the information has been repackaged to fit the 16bit frame format. This is shown on Fig. 5. All data fields have the same meaning as the ones used in the L1 data transfer from the DFE to the Broadcaster. To these two more fields have been added: a copy of "Sector Address" that is part of the header in a L1 data transfer and the copies of the Transversal Parity (bit 24) used in the LVDS transfers. This way of repackaging the information is not the most efficient, but it is the one that is content independent.

A more efficient way to repackage the information takes advantage of the bits without information content (zero filling bits) as it is shown on Fig. 5A in the Appendix. Note that this bit is at the beginning of the bit string instead of at the end as it is generated for the LVDS transfers. This is done to have a transfer data code where no fields are straddled between data frames. Note also that the data encoding used in the L3 transfers is strongly dependent of the way the L1 data is formatted. This packaging is strongly content dependent.

---

[1] To understand how these numbers are obtained, it is necessary to understand the protocols and data encoding used by the DFE to send information via the LVDS Links. This information is presented in detail in Manuel's DØ Note 3626.

Figure 5.- L3 data transfer of 10 L1 data input records

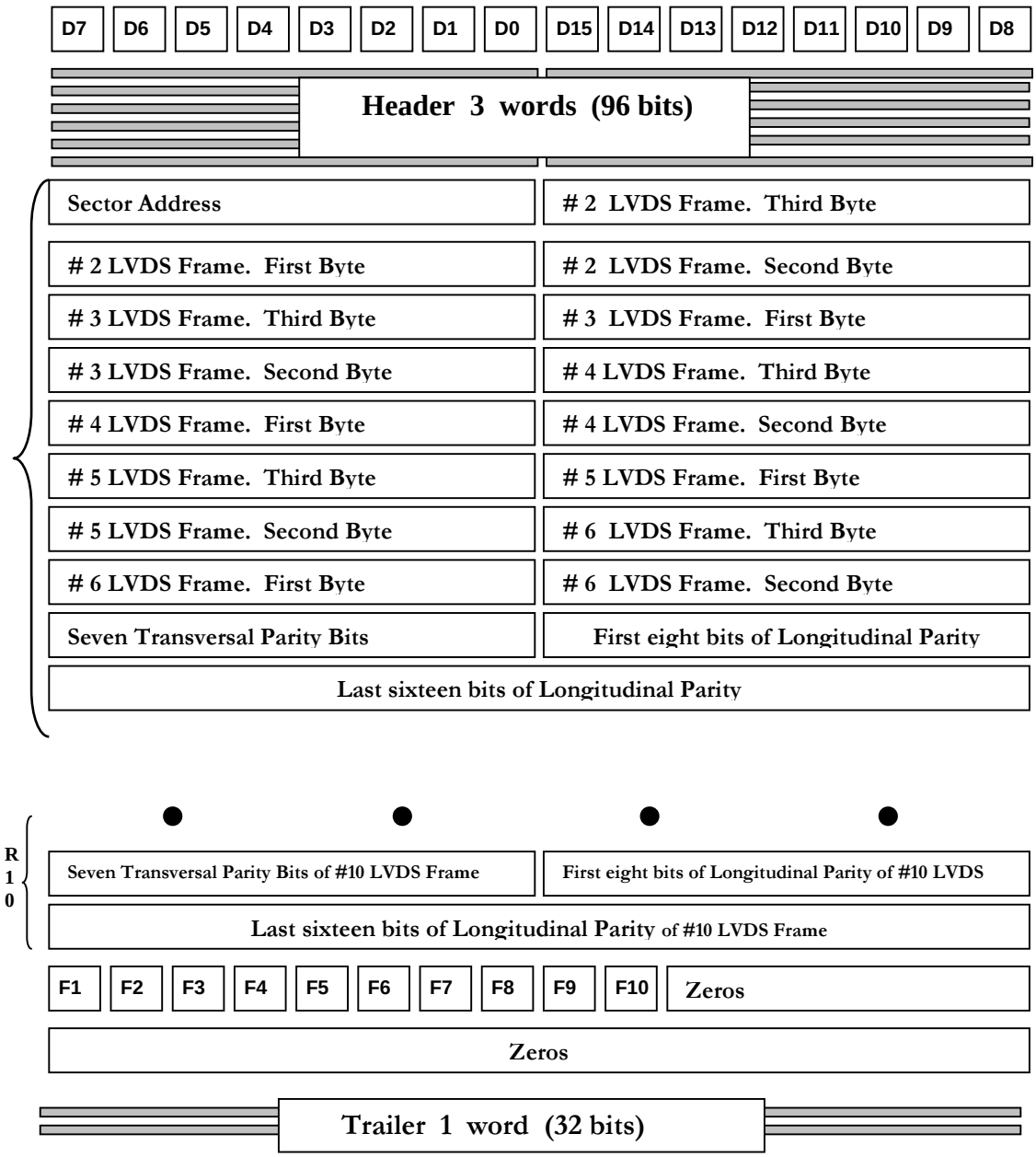

.

- Record 2, L2CFTpp data

Header (3 words)
there are 10 L2 CFT input data records each with a maximum of 24 tracks needing a maximum of

(10*(24+4)/2) = 140 words including Parity information
Trailer (1 word)
for a total of 144 words (4,608 bits) maximum.

In good probability, this maximum will never be reached because such an event would not pass the L1 Trigger requirements. Including fakes, the expected average of tracks per 4.5^0 sector is of the order of eight. This will require the transfer to L3 of ≅ 64 words (2,048 bits) only. Figure 6 shows the data structure used for this L3 information transfer.

Figure 6.- L3 data transfer of 10 L2CFTpp data input records

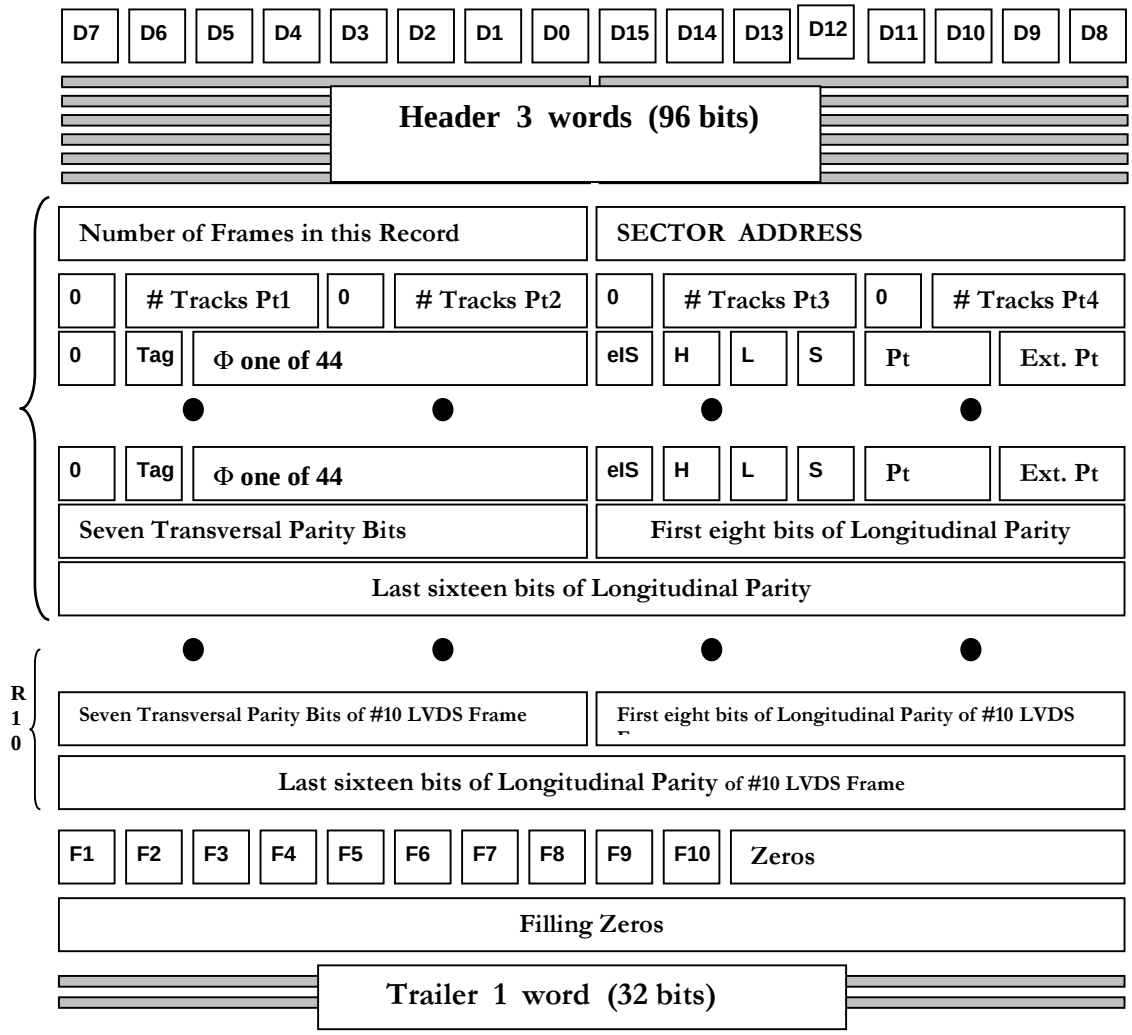

Definitions for L3 Data Transfers from the CFT Trigger

- Record 3, L2CPSpp Axial — Header (3 words)
  L2 CPS Axial input data (55 words) including Error information
  Trailer (1 word)

  for a total of 59 words (1,888 bits)

As in the previous case, the expected number of clusters per 4.5^0 sector is about four instead of the maximum eight. Using the expected number, the length of these records is ≅ 35 words or 1,248 bits. Figure 7 shows the data structure used for this L3 information transfer.

Figure 7.- L3 data transfer of 10 L2CPSpp Axial data input records

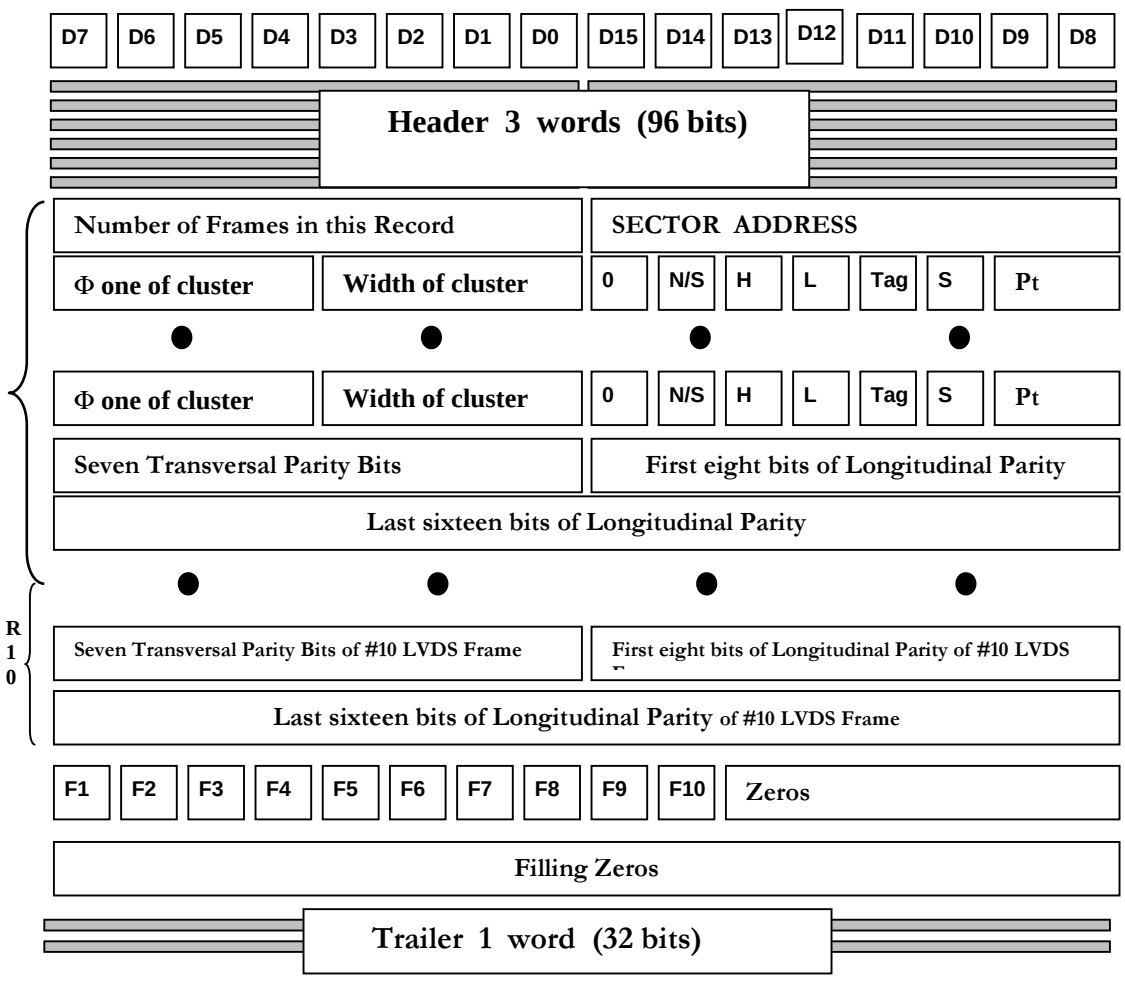

All these three different records are concatenated and sent to L3 using the eight G Links labeled "Data 1 to L3" on Fig. 4. The worst case scenario calls for a transfer of 8,256 bits of information. This transfer will take 8.256 μs.

3.2.2. CFT/CPS Axial Data from Singlet Card

The L1 data generated by the Octant cards is sent to a Singlet card. This card constructs a

Figure 8.- L3 data transfer of 8 Octant data input records

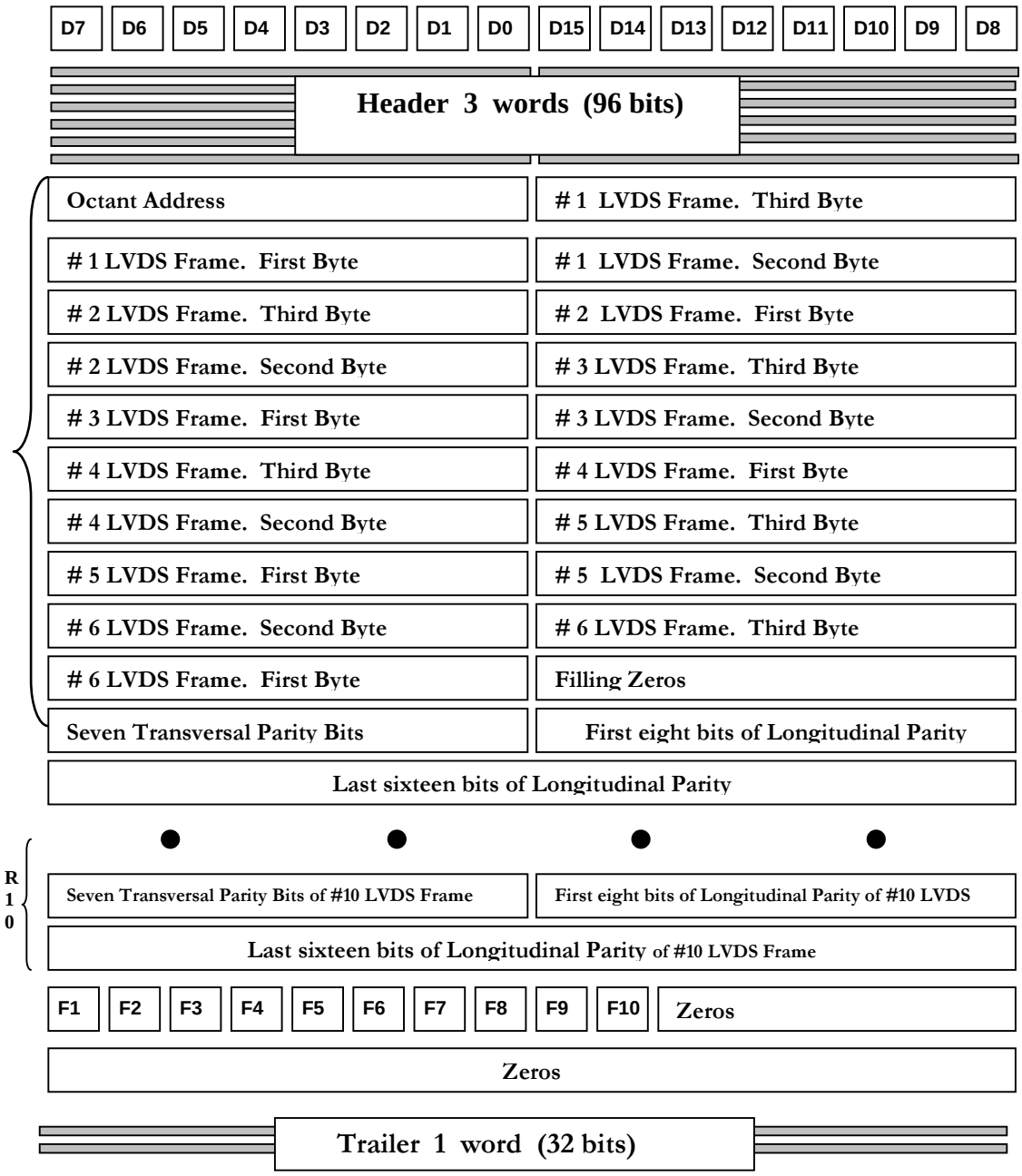

list of possible Trigger Terms up to a maximum of ninety-six. The list of Trigger Terms generated is sent to a m-Trigger Manager card for further processing. Because this Singlet card is manipulating and modifying its input data, following the established rules for sending information to the L3, the input of this card is sent to L3.

The protocol and the data bit pattern used is presented on Fig. 8. A comparison with Fig. 5 shows strong similarities. Instead of the address of the Sector, in this case the address of the Octant is given. Another difference is that here there are 124 bits of input data, corresponding to the six full 24bit frames of the inputs ♣ . The amount of data sent to the L3 in this case is

- Record , L1CPSpp Axial — Header (3 words)
  L1 CPS Axial input data of (8*12)/2 = 48 words including Error information
  Trailer (1 word)

  for a total of 52 words (1,664 bits)

The time that is required for the transfer of this Record is 1.664 μs. These Records are sent to L3 using the eight G Links labeled "Data 2 to L3" on Fig. 4.

3.2.3. CPS Stereo

There are two Broadcaster boards named L2CPS Stereo (BT1) each receiving L2 data from five Digital Front End cards as shown on Fig. 4. Each of these Broadcaster boards sends data directly to the L2CPSpp and to the L3. The L3 bit pattern is shown on Fig. 9. This pattern corresponds to

- Record , L2CPSpp Stereo — Header (3 words)
  L2 CPS Stereo input data of a maximum of 15 clusters per DFE giving 5*(15+3)/2 = 45 words including Error information
  Trailer (1 word)

  for a total of 49 words (1,568 bits)

The time that is required for the transfer of this Record is 1.568 μs. These Records are sent to L3 using the eight G Links labeled "Data 3 to L3" on Fig. 4.

♣ For the explanation see DØ Note 3626

Definitions for L3 Data Transfers from the CFT Trigger

.

Figure 9.- L3 data transfer of 5 L2CPSpp Stereo data input records

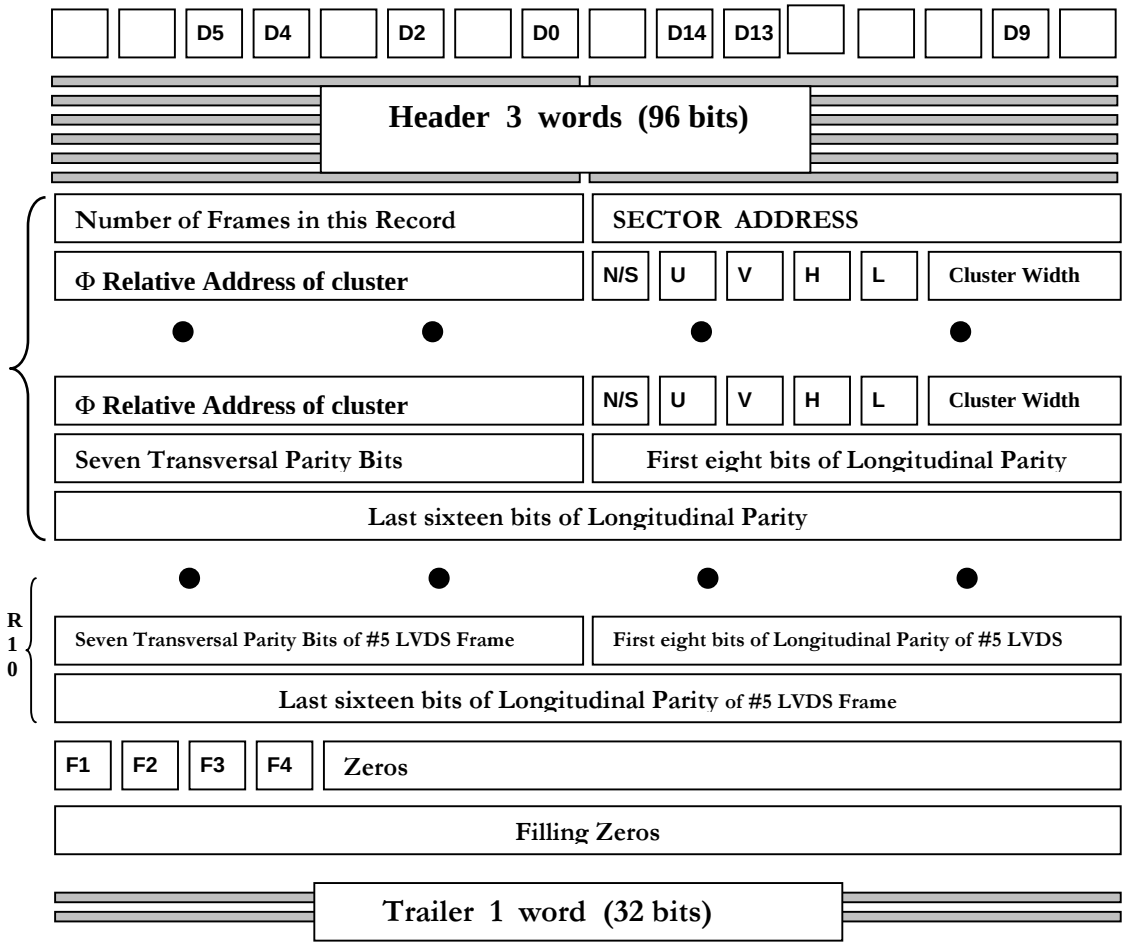

3.3. The SST System

The organization of the STT L2 with the proposed links to L3 is presented on Fig. 10. Basically there are two types of Broadcaster cards:

- one set of six cards whose inputs come directly from the DFE boards and serve the overlapping areas of the CFT
- one set of six cards to generate the Sextant. Their inputs are a mix of two outputs of the previous set and seven or eight direct outputs of the DFE.

Figure 10.- Organization of the SST data paths for the Trigger

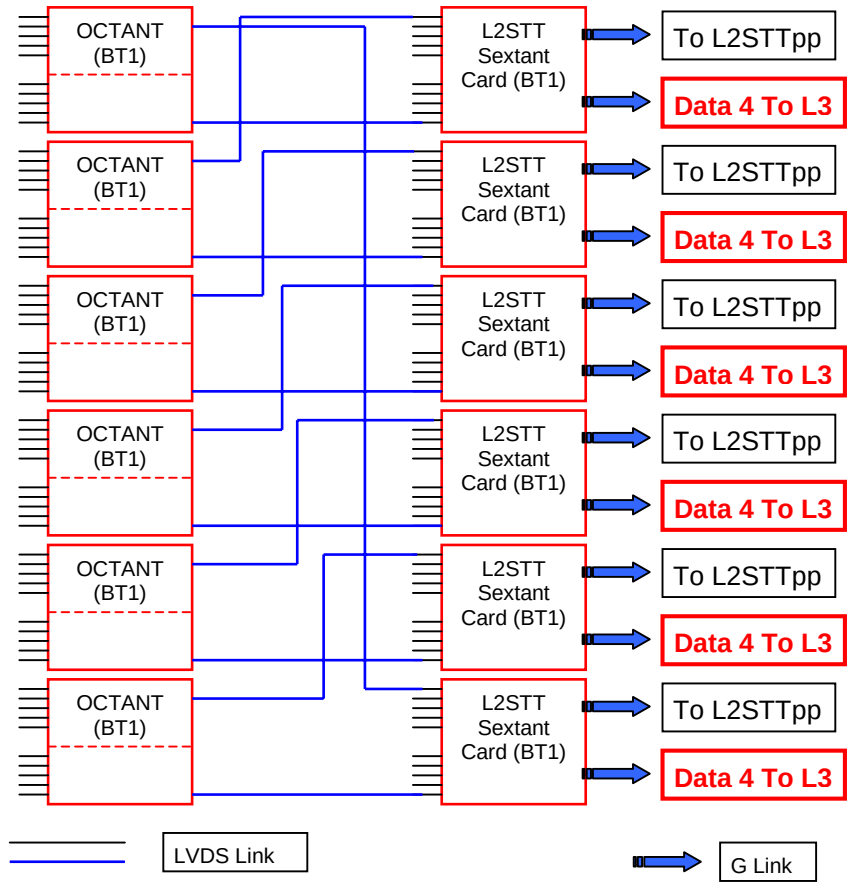

Only the second set of cards needs to send information to the L3. The information that these cards send to the L3 reflects only the output of the other set. This agrees with the overall philosophy of monitoring/debugging using the L3 links. The L3 bit pattern is identical to the pattern used by the Octant cards shown on Fig. 6, only the length of the record changes.

Record , L2STT Overlapping

Header (3 words)

L2 CFT tracks needed by the L2 STT to complete a Sextant with the overlapping region included. Note that each Sextant requires only tracks with a specific Pt sign from one of the overlapping regions and tracks of the opposite sign from the other overlapping region. This translates into maximum (6*(24+4)+5*(12+4))/2 = 132 words including Error information

Trailer (1 word)

for a total of 136 words (4,224 bits)

Definitions for L3 Data Transfers from the CFT Trigger

The time that is required for the transfer of this Record is 4.224 μs. These Records are sent to L3 using the eight G Links labeled "Data 4 to L3" on Fig. 10.

3.4. The FPS System

The System Architecture for the FPS is shown on Fig. 11. In this case, the Singlet card

Figure 11. Proposed System Architecture for the FPS

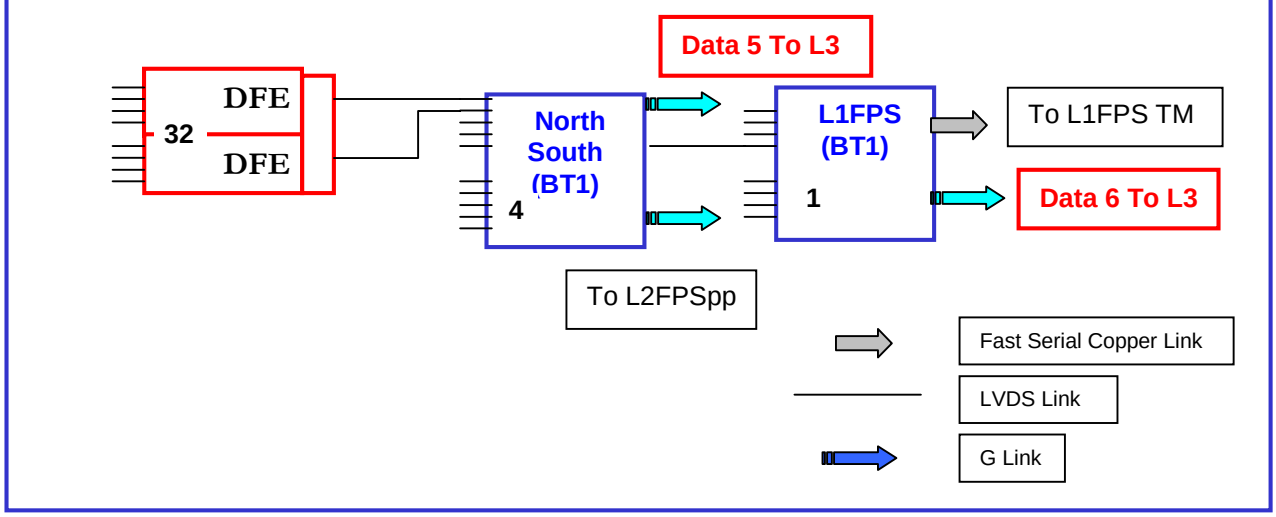

receives information from four North/South cards (like Octant cards). After filtering this information, it generates a list of possible trigger terms up to 96. The trigger terms are sent to a m-Trigger Manager type card for selection of the used Trigger Terms in the Run. The information sent to the L2FPSpp is generated in the North/South cards from the input signals received directly from the DFE cards. The G Link labeled "Data 5 to L3" send two records of the inputs to the North/South card: one for L1 data and one for L2 data.

- Record 1, L1 data — Header (3 words)
  The L1 input data consists of 8*10/2 =40 words
  Error Information (1 word)
  Trailer (1 word)

  for a total of 45 words (1,440 bits).

This record has exactly the same organization as the one used by the Octant cards in the CFT/CPS system (of course, the data sent is different). This type of record structure is shown on Fig. 5. The L2 information has completed different structure as shown on Fig. 12. These records are as follows

- Record 2, L2 data — Header (3 words)

Definitions for L3 Data Transfers from the CFT Trigger

L2 input data 8*(2*16+3)/2 = 140
Error Information (1 word)
Trailer (1 word)

for a total of 145 words (4,640 bits).

Figure 12.- L3 data transfer of 8 L2FPSpp data input records

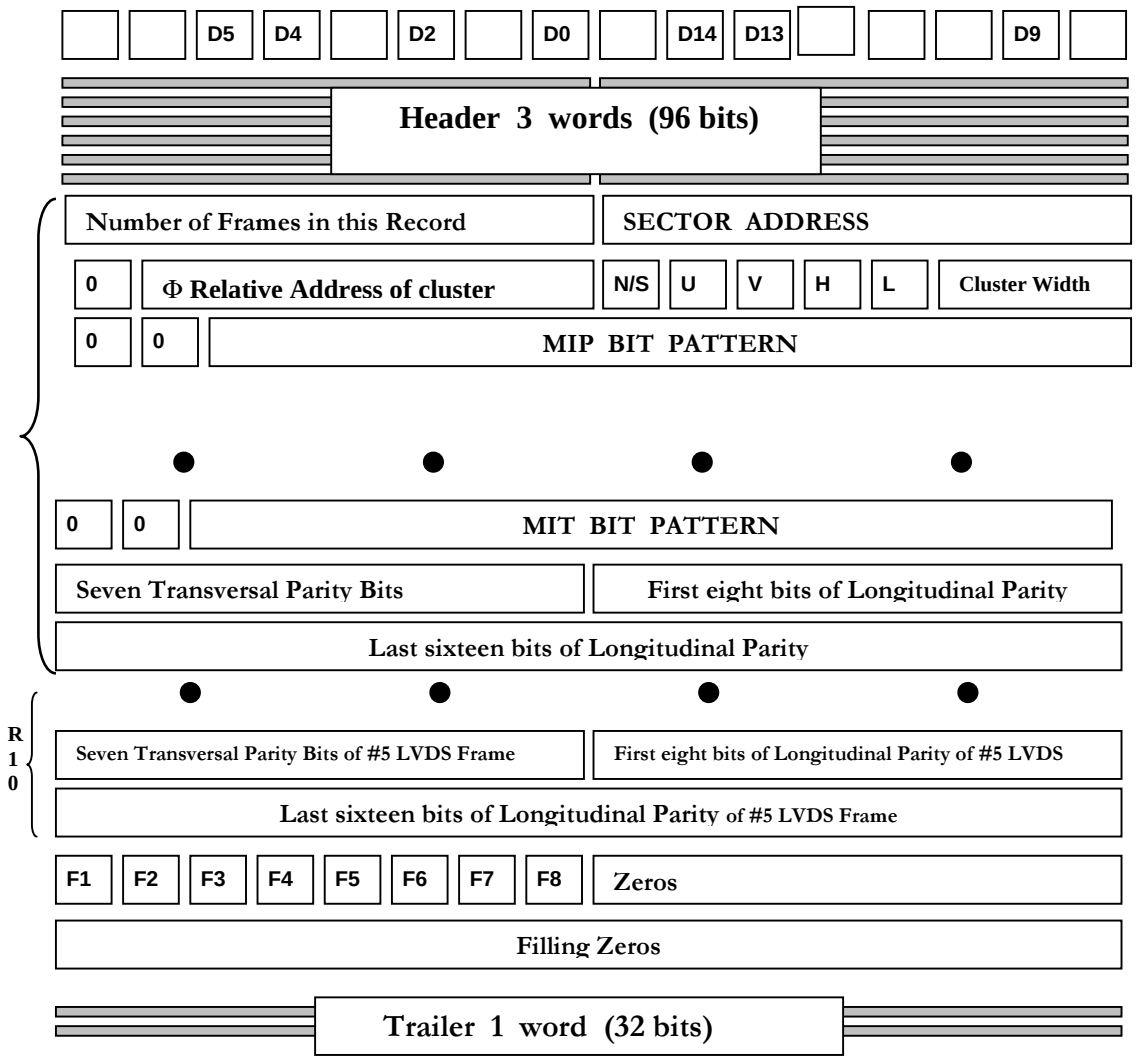

These Records are sent by the G Link labeled "Data 5 to L3" on Fig. 11.Because these two Records are sent through the same G Link, the time required to make the transfer to the L3 is 6.080 μs.

The Singlet card on Fig. 11 gets its input from four North/South cards. It also needs to send its input data to the L3. The way the data is structured in the Record sent to L3 is identical

to the previous case for the L1 Data, the only difference is the amount of data sent. Now this is as follows

- Record 3, L1 data
  Header (3 words)
  The L1 input data consists of 4*10/2 =20 words
  Error Information (1 word)
  Trailer (1 word)

  for a total of 25 words (800 bits).

This transfer is done via the G Link labeled "Data 6 to L3" on Fig. 11.

APPENDIX.

Alternative data encoding to transfer L1 Data from the Octant cards to L3.
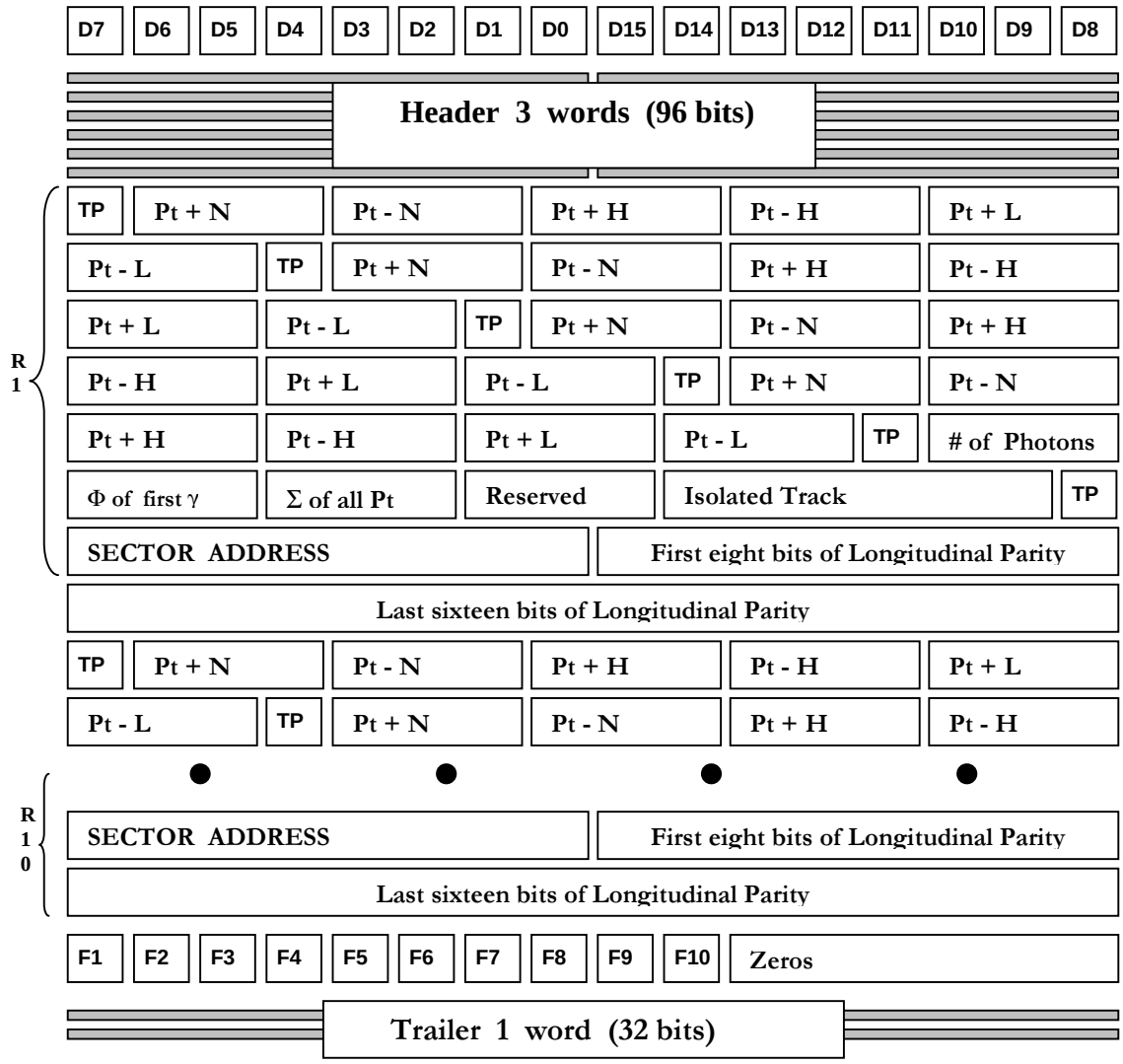
Figure 5.- L3 data transfer of 10 L1 data input records