The BROADCASTER

communication protocols
and
data encoding

Version 3.0

Manuel I. Martin for the DØ Trigger Group

LINKS between FE and BROADCASTER
BROADCASTER and TRIGGERS

Fast Copper Serial Link

G Link

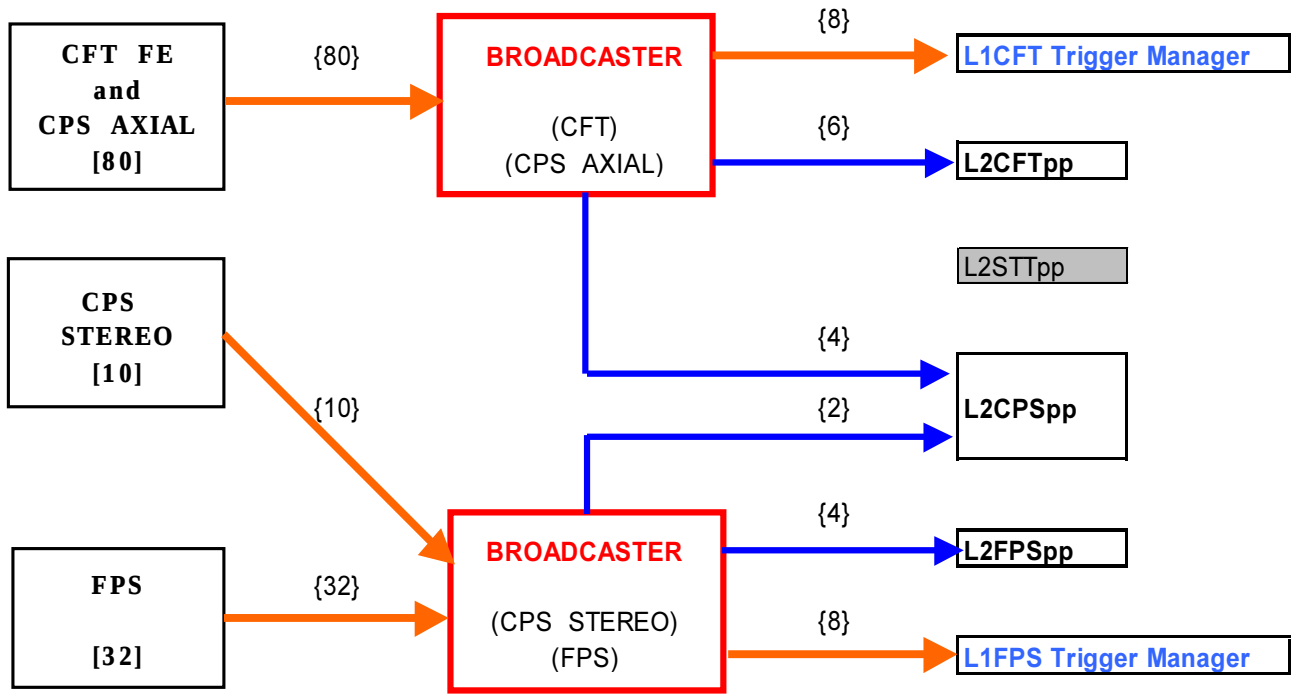

Geographical Partitioning of Data

CFT	into	L1CFT		
		Trigger Manager	OCTANTS	QCD, good Calorimeter Match,etc
		L2CFTpp	SEXTANTS	Anticipating the L2STTpp (Si Tracker)
CPS Ax	into	L2CPSpp	QUADRANTS	Good match with
CPS St	into	L2CPSpp	QUADRANTS	Calorimeter
FPS	into	L1FPS		
		Trigger Manager	QUADRANTS	QCD, good Calorimeter Match,etc
	into	L2FPSpp	QUADRANTS	Good Calorimeter Match

The Geographical Partitioning of Data is based on Physics or in predefined Symmetries.

Data used by the L1CFT Trigger Manager

Total Number of Fibers Hit	12 bits	for a maximum of 2400 fibers
Isolated Tracks	20 bits	for a maximum of 5 tracks with Pt bin (2) and PS Tag (1)
Number of e candidates	8 bits	for a maximum of 63
Number of Tracks per Pt bin	48 bits	for a maximum of 47 tracks

b0	b1	b2	b3	b4	b5	b6	b7	b8	b9	b10	b11	b12	b13	b14	b15
TOTAL NUMBER OF FIBERS HIT															
V	P	Pt BIN		V	P	Pt BIN		V	P	Pt BIN		V	P	Pt BIN	
V	P	Pt BIN						# OF ELECTRON CANDIDATES							
# OF TRACKS PT1				# OF TRACKS PT2				# OF TRACKS PT3				# OF TRACKS PT4			
# OF TRACKS PT1				# OF TRACKS PT2				# OF TRACKS PT3				# OF TRACKS PT4			
# OF TRACKS PT1				# OF TRACKS PT2				# OF TRACKS PT3				# OF TRACKS PT4			

NO PS

H PS

L PS

ISOLATED TRACKS

V	Valid
P	PS/ Not PS
Pt BIN	Pt of ISOLATED TRACK

Data used by the L1FPS Trigger Manager

Number of Matched U and V, Low and High Threshold Clusters	64 bits	for a maximum of 63 clusters of each type

	b0	b1	b2	b3	b4	b5	b6	b7	b8	b9	b10	b11	b12	b13	b14	b15
F1	# of **M**atch **H**igh Threshold **U** Clusters								# of **U**nmatch **H**igh Threshold **U** Clusters							
F2	# of **M**atch **L**ow Threshold **U** Clusters								# of **U**nmatch **L**ow Threshold **U** Clusters							
F3	# of **M**atch **H**igh Threshold **V** Clusters								# of **U**nmatch **H**igh Threshold **V** Clusters							
F4	# of **M**atch **L**ow Threshold **V** Clusters								# of **U**nmatch **L**ow Threshold **V** Clusters							

Data used by the L2CFTpp

Number of Tracks per Pt bin	4*8 bits	for a maximum of 46 tracks
List of tracks with tagging and address	n*32 bits	for a maximum of 46 tracks

F #	LW#	D0	D1	D2	D3	D4	D5	D6	D7	D8	D9	D10	D11	D12	D13	D14	D15
5	3	# of Tracks in Pt bin 1								# of Tracks in Pt bin 2							
6	3	# of Tracks in Pt bin 3								# of Tracks in Pt bin 4							
7	4	ERROR CODE				HPS	LPS	ISO	eISO	S	Pt BIN		EXTENDED Pt VALUE				
8	4	FE BOARD # (address)								Φ ADDRESS							

• • • • •

Data used by the L2CPSpp (AXIAL)

List of clusters with tagging, width, address and Pt information of track associated — n*32 bits — for a maximum of 47 clusters

F #	LW#	D0	D1	D2	D3	D4	D5	D6	D7	D8	D9	D10	D11	D12	D13	D14	D15
5	3	ERROR CODE				PSH	PSL		T	S	Pt BIN		CLUSTER WIDTH				
6	3	FE BOARD ADDRESS							N/S	CLUSTER ADDRESS							

• • • • •

Data used by the L2CPSpp (STEREO)

List of clusters with tagging,
width and address n*32 bits for a maximum of 47 clusters

F #	W #	D0	D1	D2	D3	D4	D5	D6	D7	D8	D9	D10	D11	D12	D13	D14	D15
7	4	ERROR CODE				PSH	PSL						CLUSTER WIDTH				
8	4	FE BOARD ADDRESS							U/V	CLUSTER ADDRESS							

• • • • •

Data used by the L2FPSpp

List of clusters with tagging, width, address and mit bit pattern — n*34 bits — for a maximum of 23 clusters

F #	LW #	b0	b1	b2	b3	b4	b5	b6	b7	b8	b9	b10	b11	b12	b13	b14	b15
7	4	ERROR CODE				PSH	PSL						CLSTR WIDTH				
8	4	FE BOARD ADDRESS						U/V	N/S	CLSTR ADDRESS							
9	5	MIP BIT PATTERN															
10	5																

DATA'S TRANSFER PROTOCOLS

L1
- FE Boards to BROADCASTER
- BROADCASTER to L1 Trigger Manager

L2
- From FE Boards to BROADCASTER
- From BROADCASTER to L2pp (FIC)

L3
- From BROADCASTER to L3 VRB

L1
PROTOCOLS for the Fast Cu Serial Link

FE to BROADCASTER

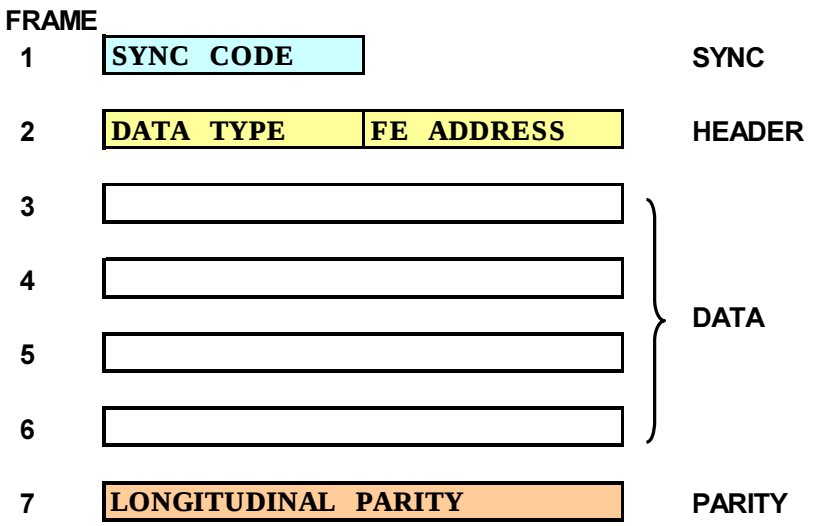

BROADCASTER to Trigger Manager (L1)

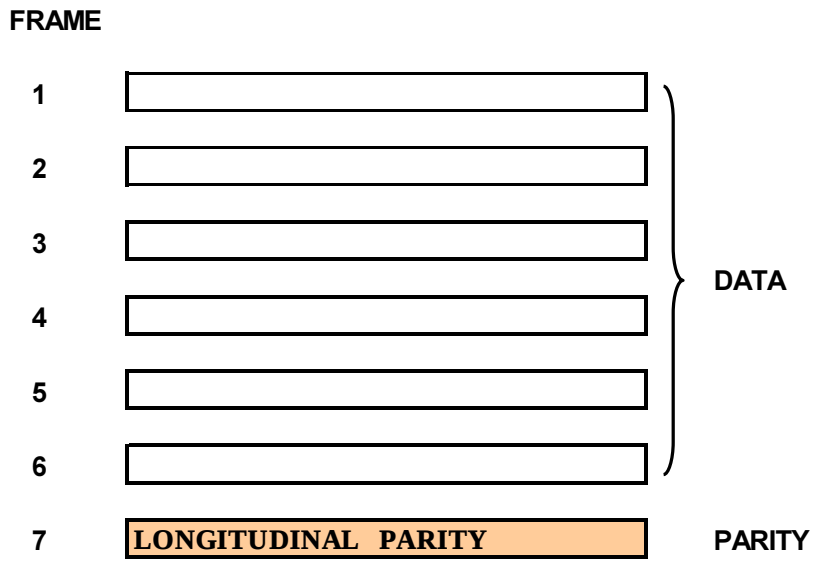

L2 PROTOCOLS
for the Fast Cooper Serial Link

FRAME				
1	SYNC CODE			
2	DATA TYPE	FE ADDRESS		
3	TURN NUMBER			
4	CROSSING #	TAG	# of OBJECTS	
5	DATA			
	• • •			
N	DATA			
N+1	LONGITUDINAL PARITY			

Protocol for BROADCASTER to L2pp (FIC) Transfers

F#	LW#	D0	D1	D2	D3	D4	D5	D6	D7	D8	D9	D10	D11	D12	D13	D14	D15
1	1	Number of Objects								Header Length (3)							
2		Object Length (1 or 2)								Hd. Format			Obj. Format				
3	2	Source ID								Bunch Number							
4		Rotation Number															
5	3	Algorithm Major Version								Algorithm Minor Version							
6		Processing ID								Global ERROR Code							
2N-1	N	Bunch Number								Source ID							
2N	N	Longitudinal Parity								Longitudinal Parity							

HEADER

TRAILER

Compromise to have common protocol with other systems

BROADCASTER to L2pp Transfers

ERROR CODES

BIT	ERROR	G	L
7	Error Detected. Use Data at Own Risk.	✔	
6	Maximum number of consecutive parity errors reached	✔	
5	Maximum number of consecutive Frame Sync errors reached	✔	
4	Maximum number of consecutive Bit Sync errors reached	✔	
3	Parity Error detected	✔	✔
2	Frame Sync Error detected	✔	✔
1	Bit Sync Error detected	✔	✔
0	Test Data (no real data)	✔	

BROADCASTER

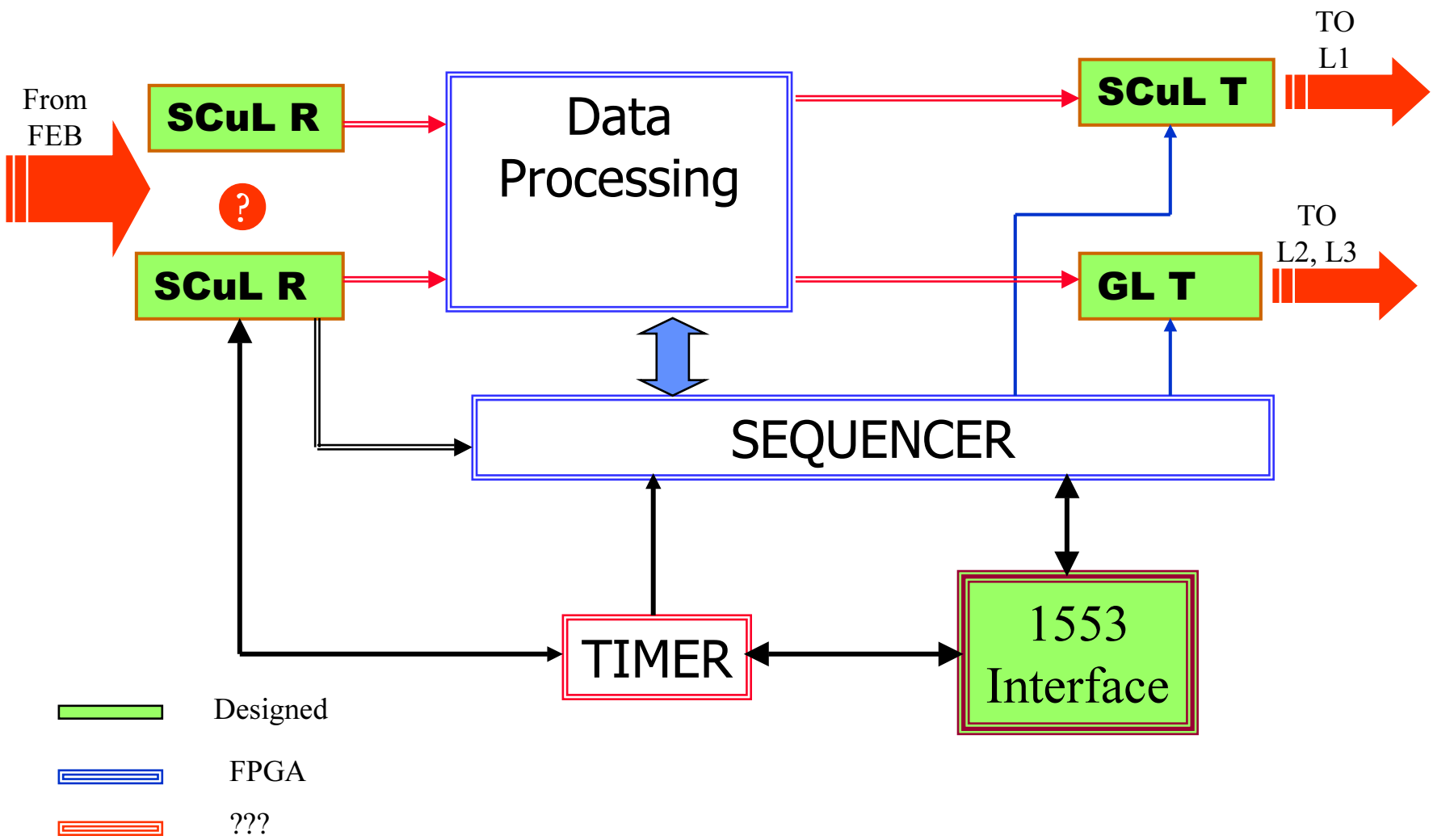
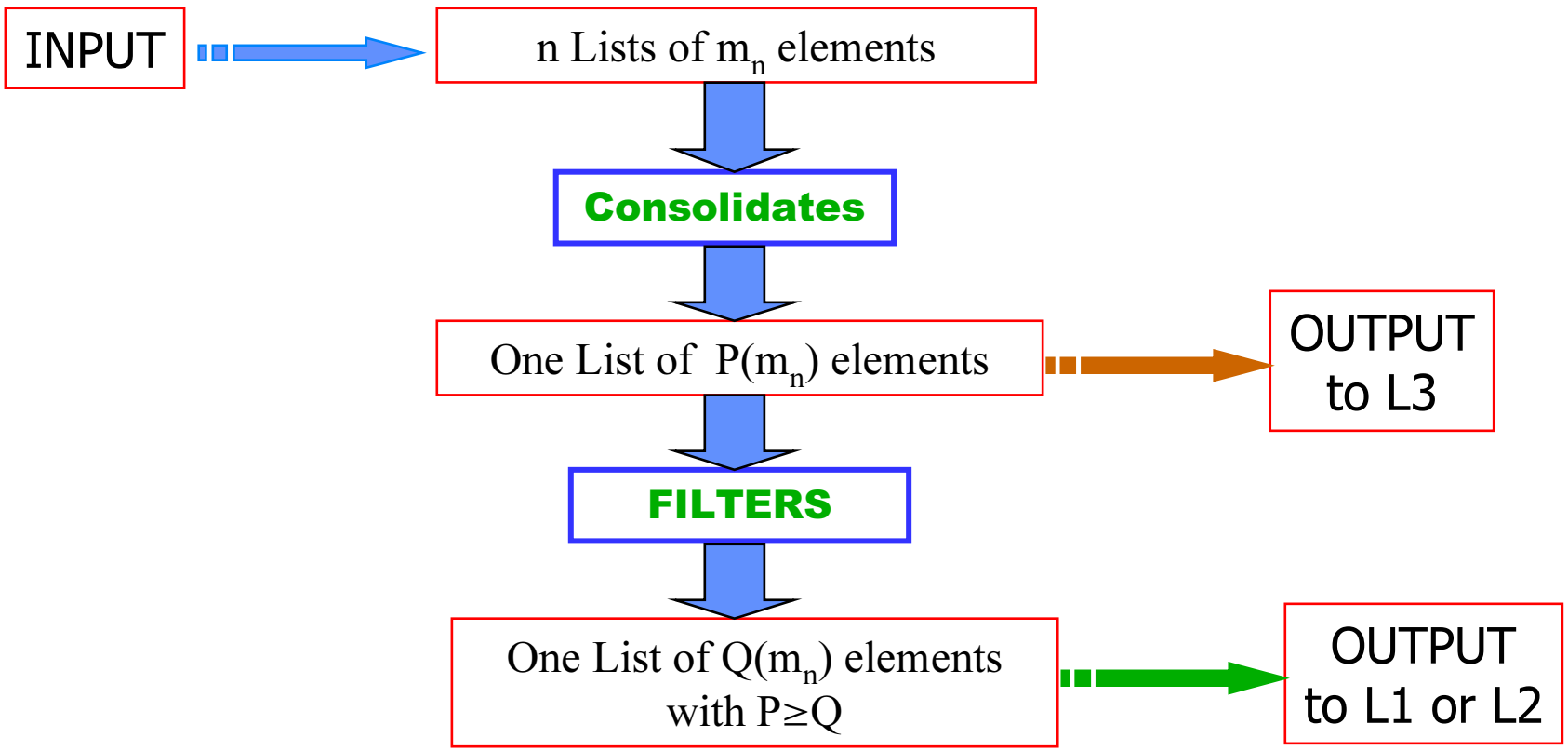
THE BROADCASTER PROCESS DATA