Operational Readiness Clearance Documentation

DØ SMT

HDI Recovery System

RunIIb Silicon Group

September 10, 2007
Addendum to April 4, 2006 document

System Contact
Linda Bagby
DAB X3100
bagby@fnal.gov

DØ SMT **1**

HDI RECOVERY SYSTEM **1**

INTRODUCTION **3**

LOW VOLTAGE POWER SUPPLY SYSTEM **4**

POWER DISTRIBUTION 4
FILTER NETWORK 6
EQUIPMENT LOCATION 6
Movable Counting House *6*
Cathedral Area *7*
Central Calorimeter Cryostat Face *7*

EQUIPMENT SPECIFICATIONS **8**

WIENER POWER SUPPLY 8
INTERLOCK CHASSIS 8

SAFETY SYSTEM **10**

MOVABLE COUNTING HOUSE RACK SAFETY 10
Low Voltage Power Supply System *11*
Adapter Card *11*

Introduction

The DØ HDI Recovery system is a system designed to recover portions of the SMT detector that are not currently operating as expected. Readout problems with the SVX2 readout chip have been an ongoing challenge for some time. In August, 2006, approximately 50 HDIs were lost due to high DVDD currents. We believe that wire bonds providing DVDD to the SVX2 readout chip are broken. The recovery system, mainly consisting of a new active Adapter Card and power supply, will provide a voltage level boost to control lines responsible for the correct readout of a SVX2 chip facilitating recovery of the data from remaining SVX2 chips with unbroken power bonds on the HDI in question. We seek operational readiness clearance for unattended operation of the SMT HDI Recovery system.

Low Voltage Power Supply System

The SMT HDI Recovery system is composed of a commercial Wiener power supply, an external filter network, an Interlock chassis, and a fuse panel. The purpose of the system is to provide power to the newly designed active Adapter Card.

Power Distribution

The Wiener PL508 unit is specifically designed to provide power over long distances. In order to facilitate easy access, the power supply and interlock chassis are located in the movable counting house. The fuse panels and filter networks are mounted in the Cathedral area of the D0 collision hall. The Power Distribution cards and Adapter cards are mounted on the face of the calorimeter central cryostat. Figure 1 shows the system block diagram.

Figure 1: SMT HDI recovery System

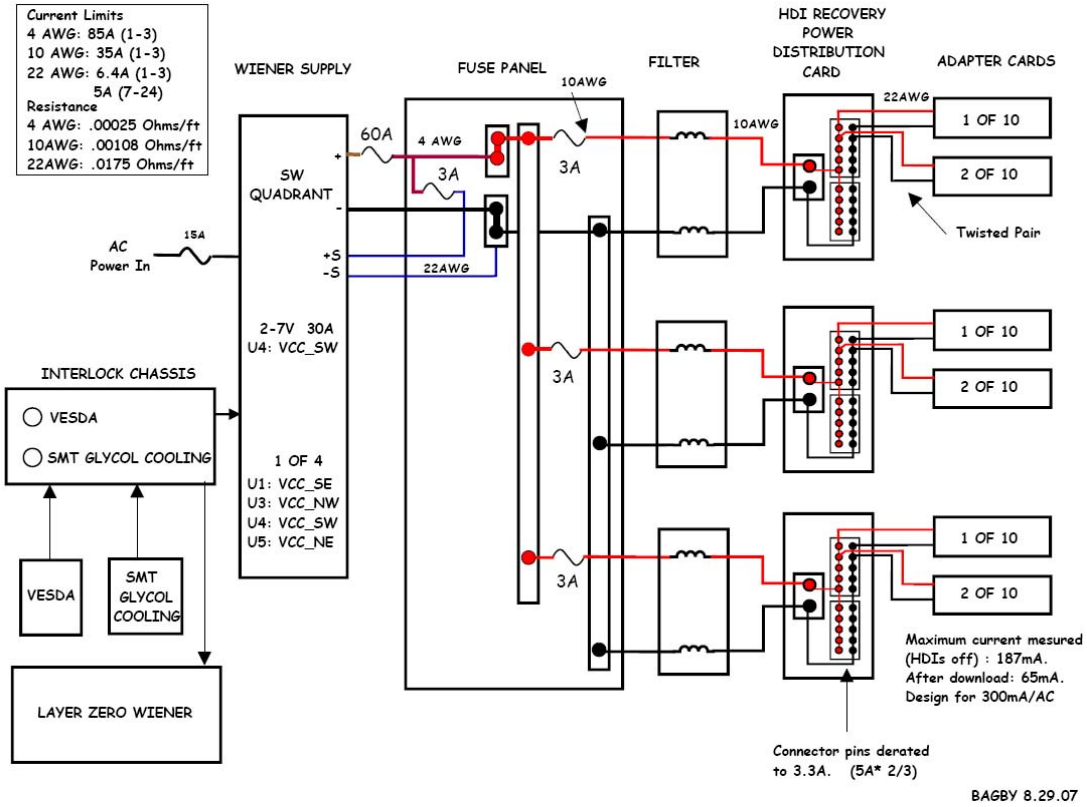

Four modules provide power to each quadrant consisting of up to 30 Adapter Cards. Each Adapter Card requires a maximum of 300mA of current for a total of 9A per power supply module. 150 feet of 4 AWG Powerflex cable is used from the power supply to the fuse panel to minimize the voltage drop. 4 AWG (85A) cable is capable of handling the 30A maximum current available from the supply. In case of catastrophic failure, 60A in-line fuses are installed on the positive side of each power supply module as shown in Figure 2.

Figure 2: In-line 60 Amp Wiener module fuses.

The 4 AWG cable is terminated at the in-line fuse site with a Thomas and Betts Gray square terminal (gray) with a crimp die suitable for 6 AWG cable. This die was used to provide higher crimp pressure due to the high strand count of the Powerflex cable. Thomas and Betts recommended a crimp pull strength of at least 140lbs. The crimp was tested on a sample piece of cable using a strain gauge to 160 lbs. The crimp held firmly. The contact area of the 0.375 in. square lug is 0.28 sq. in. The ampacity is 107A/sq. in. which complies with the 1000 A/ sq. in. maximum Fermilab safety guideline.

The lug termination at the fuse panel has a contact area of 0.2 sq. in. The ampacity of this connection is 150A/sq. in. which does not exceed the 1000A/sq. in. guideline. The right-angle, tin-plated, 0.125” copper bar used to connect the 4 AWG lug to the 50 A barrier strip completely accommodates the lug connection surface. The surface area of the bus bar that comes in contact with the barrier strip is 0.492 sq. in. The ampacity of this connection is 61 A/sq. in. which also meets the safety guideline. Figure 3 shows the connections inside the fuse panel located in the cathedral of the D0 experiment.

Figure 3: Cathedral Fuse panel connections.

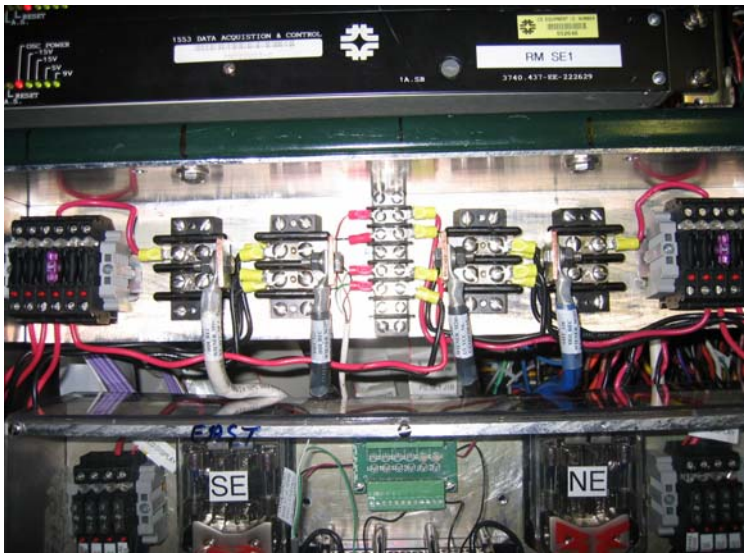

10AWG (35A) cable is used to connect the barrier strip to the 3A fuse bank bus bar. The 22 AWG remote sense lines are also fused at 3A within the fuse bank. 10 AWG is used to connect the 3A fuse to the filter card described in the next section. The output of the filter card then goes to the Power Distribution card mounted on the face of the Central Calorimeter. Molex Mini-Fit Sr. 50A pins are used to bring the power into the card via 10 AWG cable. 5A pins, de-rated to 3.3A due to the parallel pins configuration, are used to distribute the 5V power to as many as 10 individual Adapter Cards via a 22 AWG twisted pair. The 10 twisted-pair 22 AWG cable bundle has a 5A current capability. The Adapter Cards use 3A rated pins. Part numbers are available upon request.

Filter Network

The filter network was design to minimize noise pickup in the readout system and is used in the Layer Zero system at DZero. This same filter design is used in this system. The filter consists of two baluns and a 2.2uF capacitor shown below in Figure 4. The first balun provides common-mode rejection while the second is used in band-reject mode. Each supply line to the Adapter Card is connected to a separate filter network. The #8112 balun is rated for a maximum current of 5.6 Amps which causes a 35C temperature rise. Due to the 3 Amp fuse upstream of each filter, the baluns will not experience more than 3 Amps of current. A complete description of the filter design is available at http://d0server1.fnal.gov/users/bagby/www/LV_PS/a1050923.pdf .

Figure 4: Power Supply Filter Network

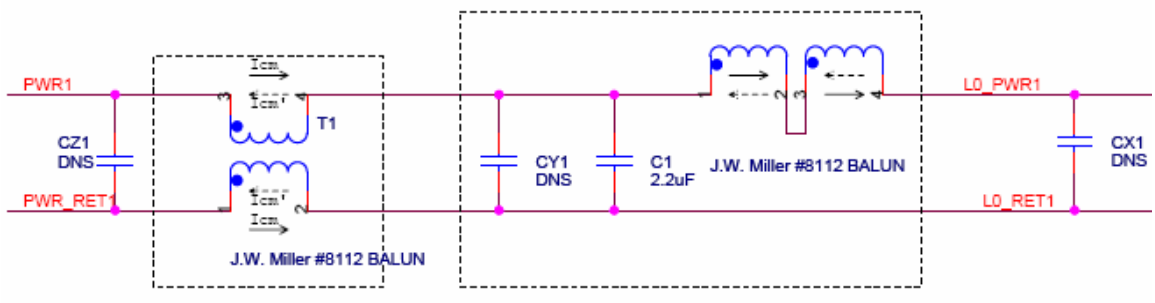

Equipment Location

The following sections describe the location of the equipment for the HDI Recovery System.

Movable Counting House

Figure 5 is the rack layout of the Wiener Power supply and Interlock chassis in rack M209 located on the second floor of the movable counting house. Typical installation practices are followed which allows for air space above and below the power supply.

Figure 5: M209 Equipment location.

SMT HDI Recovery Supply

Interlock Chassis

Cathedral Area

The fuse panels are located on the west and east side of the cathedral area inside the Dzero collision hall. A clear Lexan cover prevents foreign objects from falling inside the unit. The filter networks are mounted under the fuse panel and are also covered with a shield as shown in Figure 6.

Figure 6: Cathedral Fuse Panel and Filter Installation

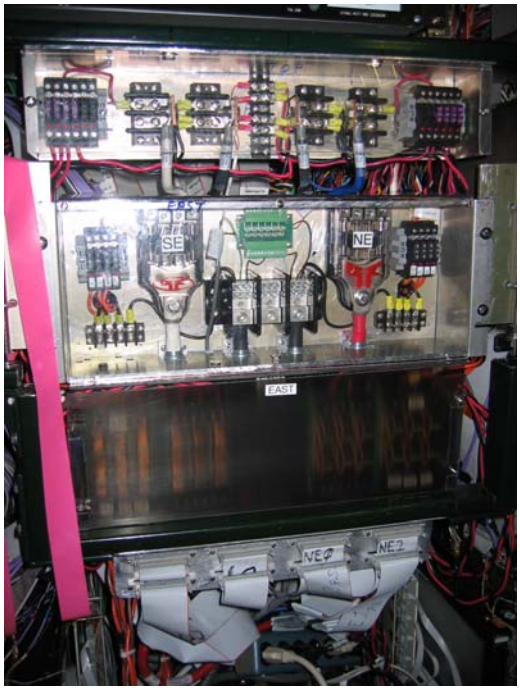

Central Calorimeter Cryostat Face

The new Adapter Cards are mounted between the Calorimeter Central Cryostat (CC) and the Calorimeter End Caps (EC). The power distribution cards are mounted in various positions on the CC as shown in Figure 7. Kapton tape is used to cover exposed surfaces on both types of cards.

Figure 7: SMT HDI Recovery Power Distribution Card and Adapter Card.

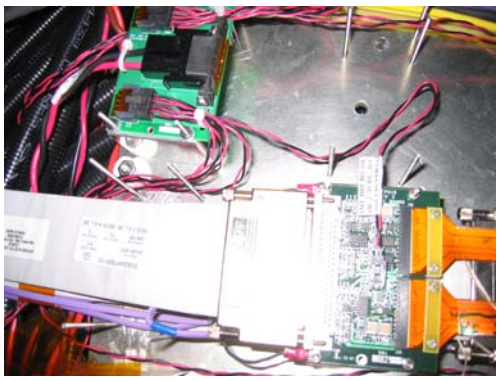

Equipment Specifications

Wiener Power Supply

The Wiener PL508 power supply provides separate floating voltages for each of the four quadrants (SE:SouthEast, NW:NorthWest, SW:SouthWest, NE:NorthEast). The same type of supply is used in the Layer Zero system to provide equipment commonality. A spare module (U6) is provided for quick recovery in the event of a module failure.

Table 1 shows the power supply module capacity and operating parameters. Two trip levels are associated with each module's output current. The first trip level is called I Max, and the second level of protection is the I Limit. The I Max current level is the maximum current for a good status indication. If more current is requested than the I Limit set point, the output voltage will fail. There are three voltage trip parameters for each module. An upper (Over V) and lower (Under V) window is set around the target voltage (Output V). If the output voltage goes below Under V or above Over V, the supply will turn off. The third voltage trip level is the Over Voltage Protection (OVP) value. If the module output voltage rises above the OVP value, the output will crow-bar.

Power Supply	Module Specification	Output V (V)	I Limit (A)	Under V(V)	Over V (V)	I Max (A)	OVP(V)
U0:	2-7V, 115A, 550W	0	5	0	3	4	6
U1: VCC_SE	2-7V, 30A, 210W	5.5	6.1	4.8	5.6	6	5.9
U2:	12-30V, 11.5A, 280W	0	5	0	15	4	6
U3: VCC_NW	2-7V, 30A, 210W	5.5	6.1	4.8	5.6	6	5.9
U4: VCC_SW	2-7V, 30A, 210W	5.4	6.1	4.8	5.5	6	5.9
U5: VCC_NE	2-7V, 30A, 210W	5.55	6.1	4.8	5.65	6	5.9
U6: SPARE	2-7V, 30A, 210W	0	6.1	0	5.2	6	5.3
U7:	5-10V, 80A, 600W	0	5	0	5.5	4	6

Table 1: Wiener Module Specifications

The Wiener supply is operated via the mainframe front panel, RS232, or a CAN bus interface. The system has been integrated into the experiment's EPICS system and is monitored with a software application. U0, U2, and U7 will not be used in the system.

The module mainframe is fused on the 120VAC input with a 15 Amp fuse. A solid state relay is used to control application of AC power to all modules housed in the mainframe. This relay is used as part of the interlock system described in the next section.

Interlock Chassis

The Interlock chassis provides a means of disabling the Wiener mainframe, thus all power supply modules, in the event of a detector cooling fault (GLYCOL) or detection of smoke (VESDA) in the west and east cathedral area. Figure 8 is the schematic drawing of the interlock chassis. This unit was originally designed for the Layer Zero system and modified to provide an interlock to the new SMT HDI Recovery Wiener supply.

A set of mechanical contacts, from the Glycol cooling system and the VESDA fire system, enables power to relays K1 and K2 thus closing a solid state relay on the AC line of the Wiener power supply. In addition, a fault out indication is sent to the RMI thus disabling the AC power via the Pulizzi box. Permit, chassis

power, and fault condition status are indicated on the front panel of the chassis by LEDs as well as through the 1553 RM.

Figure 8: Interlock Chassis Schematic Diagram.

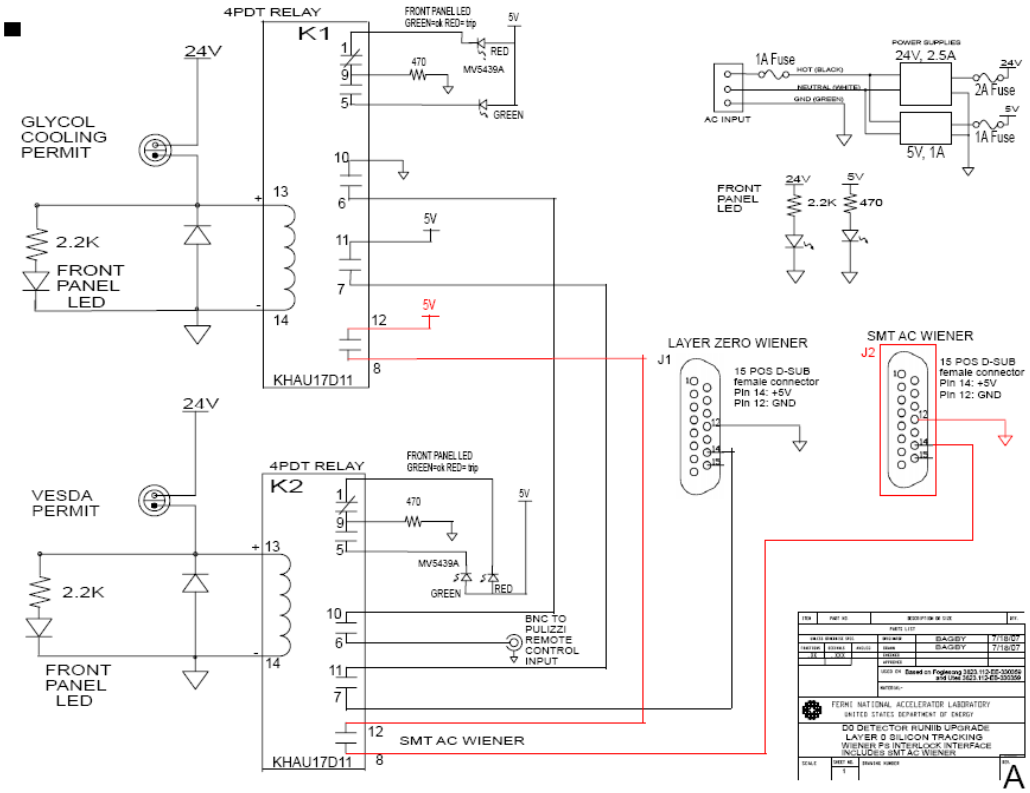

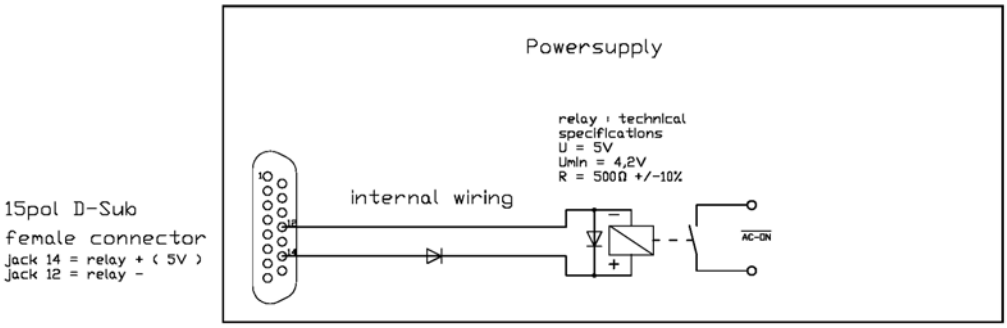

Safety System

Movable Counting House Rack Safety

Figure 9 illustrates the block diagram of the safety system in rack M209. This is a standard installation for all DZero racks in the counting house. The configuration shown will interrupt AC power to the Wiener and Interlock Chassis in the event smoke is detected in relay rack M209. In addition, if the Interlock chassis detects an external interlock, the Wiener power will be interrupted by two mechanisms. The first mechanism is a direct interlock into the Wiener while the second is via the Pulizzi.

Figure 9: Counting House Safety System

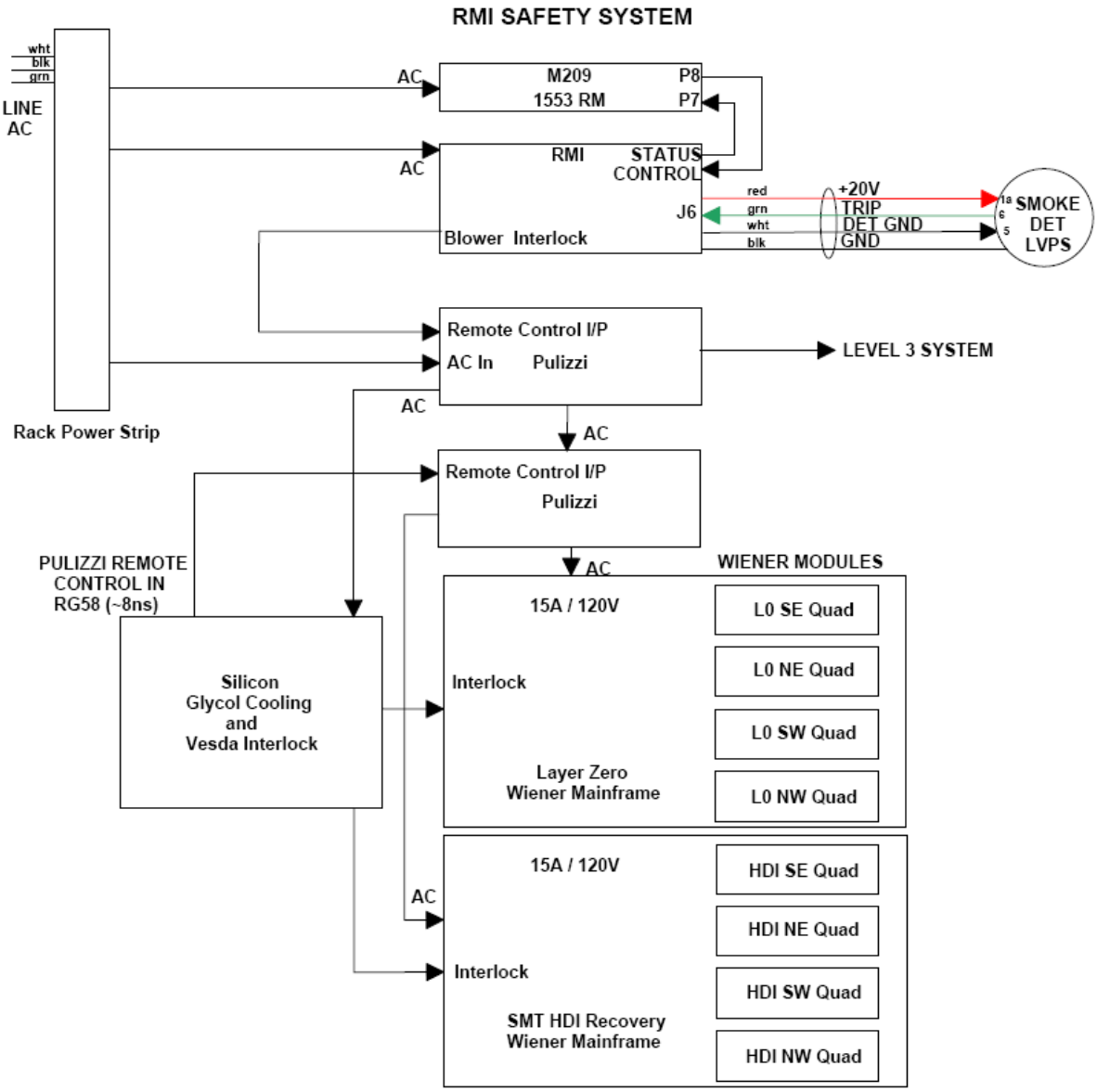

Electronics Safety

Low Voltage Power Supply System

The SMT HDI Recovery system is protected against all possible fault situations with the Wiener Power Supply and the Interlock chassis as well as features on other system electronics such as the Interface Board and the Adapter Card.

1. Fuse in AC power line in the Wiener power supply.
2. Solid state relay in the Wiener 120 VAC power line.
3. Fuses in SVX2 power lines on the Fuse Panel.
4. Two current and three voltage trip levels in the Wiener Power supply.

1. The 15A AC line fuse, providing main power to the Wiener, protects the system from faults on the mainframe side of the system.

2. The solid state relay on the AC power main of the Wiener provides an external trip mechanism for removing power from the system in case of GLYCOL cooling or VESDA trips. The philosophy behind the cooling system interlock is that the silicon sensors should not be allowed to get too hot (and burn up) or too cold (humidity condensation). VESDA provides a shutdown trip in the event smoke is detected in the cathedral area of the collision hall.

3. A series of fuses in the power lines up to the adapter card protect the cabling and the Adapter Card. The fusing will be above normal operating levels.

4. Internal Wiener trip levels provide a two level current trip (Imax, I Limit) and a three level voltage trip (Under Voltage, Over Voltage, and OVP).

Adapter Card

The replacement Adapter Card (HEP015 Rev 2) is a six-layer copper/FR4 circuit board that is a direct drop-in replacement for the HEP015 Rev 1.5 board. It is largely the same except for the addition of a power connector, four TTL ICs and five FET switches. It's purpose is to recover non-working HDIs in which one SVX chip has a fused or broken DVDD wire bond. It does this by applying +5V power to the SVX chip, through the FET switches, to four of the data lines, which in turn power the SVX's DVDD net via the chip's protection diodes.

The +5V twisted pair enters the Adapter Card via a Molex 7055-30001 2-pin connector rated for 3 Amperes per pin. The pins are .025" square. The mating connector part number is 50-57-9402 (shroud) and the part number for the contacts is 16-02-0104. The following two connectors are the same as in the original Adapter Card: The connector to the low-mass-cable (and HDI) is a Hirose FH21-30S-1DS rated 0.5A per pin. The connector to the 80-conductor gray cable (and Interface Board) is a 3M N10280-52E2VC. All six layers of the new Adapter Card are 1 oz. copper.