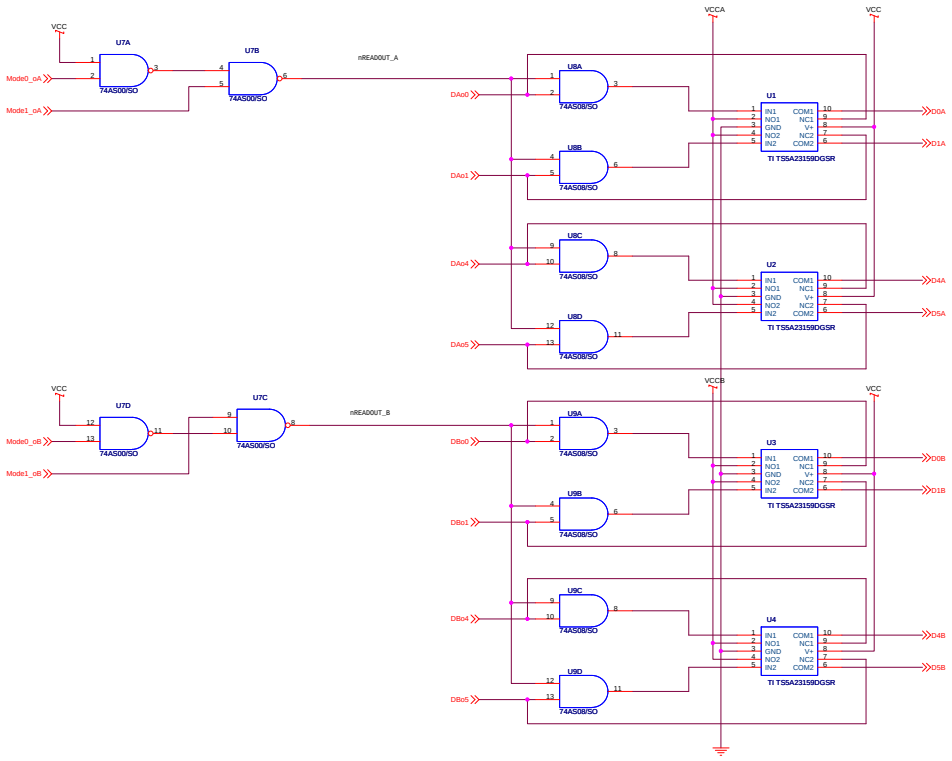

In readout mode, B0 Cond. signal connects to SVX line.

In other modes, B0 Cond. signal connects to SVX line when line is low,

and VCC connects to SVX line when line is high.

This gives the non-DVDD chip extra power through the

protection diodes during idle, acquire, and digitize modes.

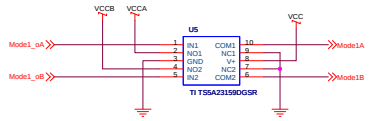

The Mode1 line is reinforced to give the SVX with the broken

wire bond extra voltage during readout mode.

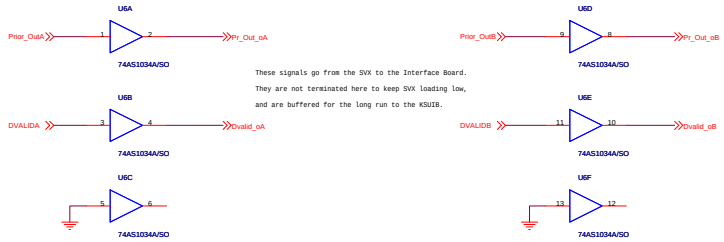

These signals go from the SVX to the Interface Board.

They are not terminated here to keep SVX loading low,

and are buffered for the long run to the KSU18.

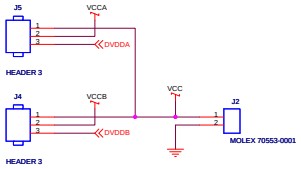

These jumpers can be small, i.e. 2mm.

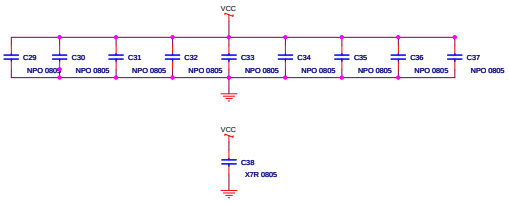

Title	ADAPTER BOARD CHANGES	
Size C	Document Number HEP008	Rev <RevCo
Date: Monday, July 02, 2007	Sheet 1 of 1	