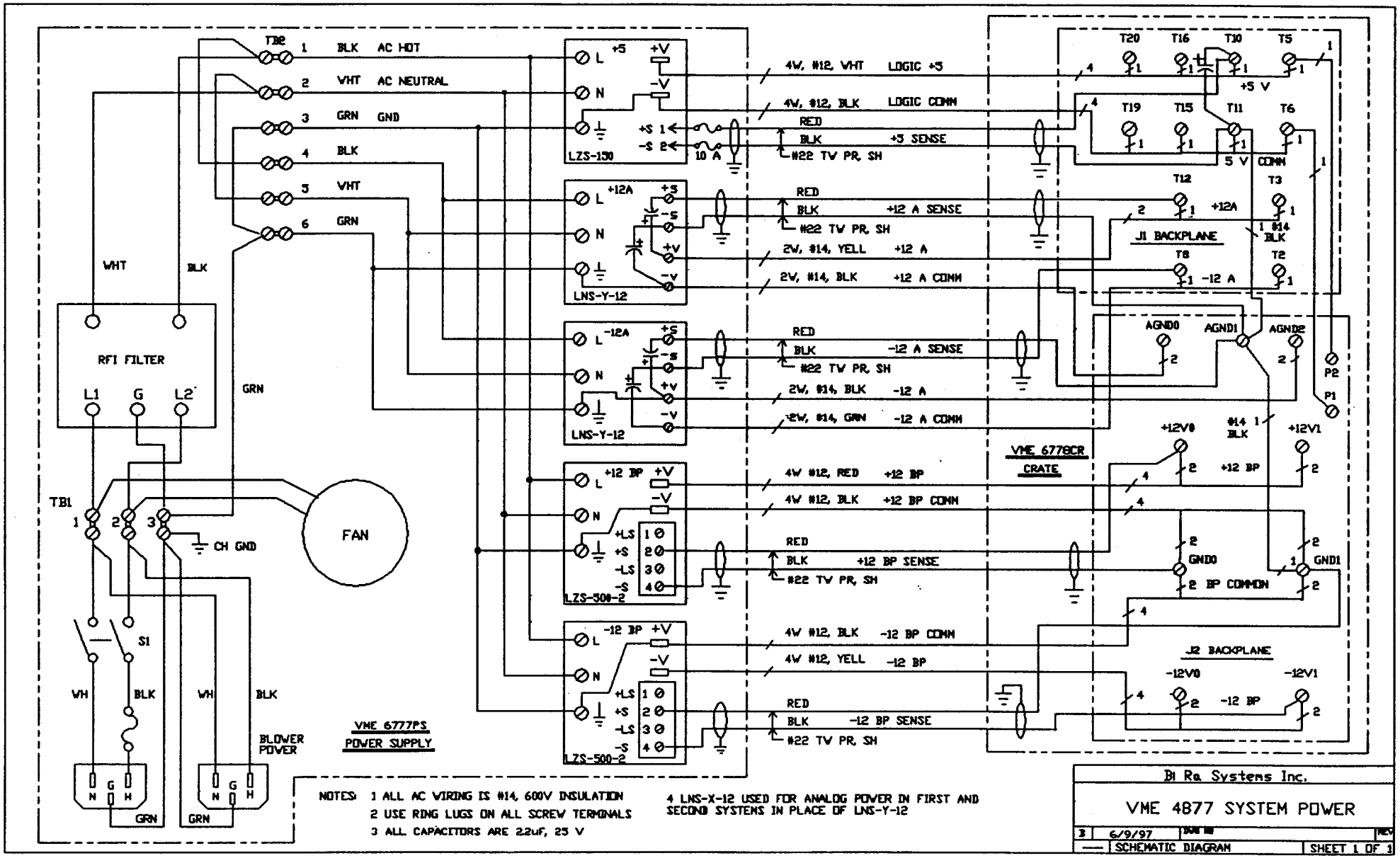
TB2
1 BLK AC HOT
2 WHT AC NEUTRAL
3 GRN GND
4 BLK
5 WHT
6 GRN
WHT
BLK
RFI FILTER
L1 G L2
GRN
TB1
1 2 3
CH GND
FAN
S1
WH BLK WH BLK
BLOWER POWER
N G H
GRN GRN
VME 6777PS
POWER SUPPLY
LZS-150
LNS-Y-12
LZS-500-2
10 A
4W, #12, WHT LOGIC +5
4W, #12, BLK LOGIC COMM
RED
BLK +5 SENSE
#22 TW PR, SH
BLK +12 A SENSE
2W, #14, YELL +12 A
2W, #14, BLK +12 A COMM
BLK -12 A SENSE
2W, #14, BLK -12 A
2W, #14, GRN -12 A COMM
4W #12, RED +12 BP
4W #12, BLK +12 BP COMM
BLK +12 BP SENSE
4W #12, BLK -12 BP COMM
4W #12, YELL -12 BP
BLK -12 BP SENSE
VME 6778CR
CRATE
J1 BACKPLANE
J2 BACKPLANE
+5 V
5 V COMM
+12A
-12 A
AGND0 AGND1 AGND2
P2 P1
+12V0 +12V1
+12 BP
GND0 GND1
2 BP COMMON
-12V0 -12V1
-12 BP
NOTES: 1 ALL AC WIRING IS #14, 600V INSULATION
2 USE RING LUGS ON ALL SCREW TERMINALS
3 ALL CAPACITORS ARE 22uF, 25 V
4 LNS-X-12 USED FOR ANALOG POWER IN FIRST AND SECOND SYSTEMS IN PLACE OF LNS-Y-12
Bi Ra Systems Inc.
VME 4877 SYSTEM POWER
B 6/9/97
SCHEMATIC DIAGRAM
SHEET 1 OF 1