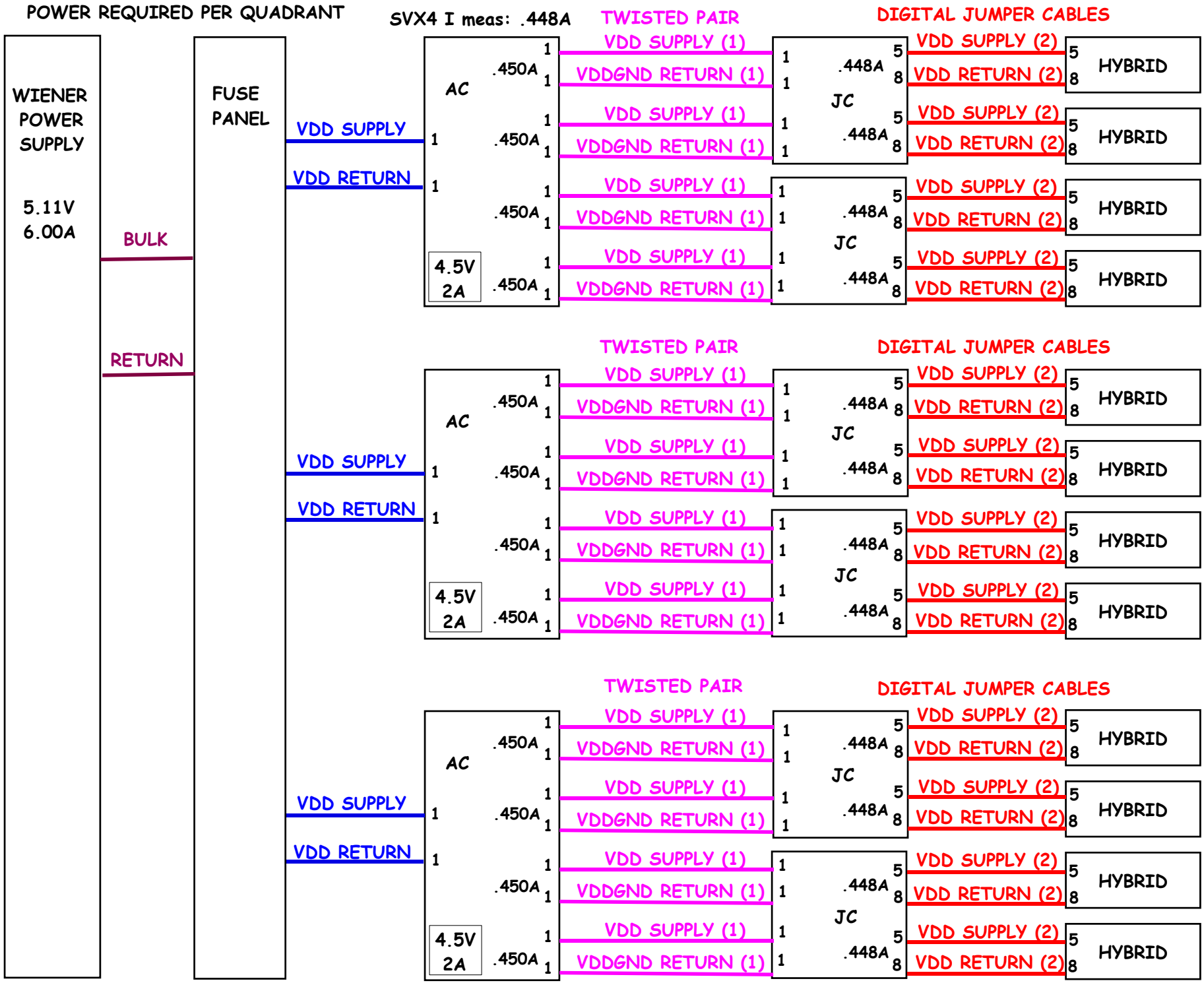
POWER REQUIRED PER QUADRANT
SVX4 I meas: .448A
WIENER POWER SUPPLY
5.11V
6.00A
BULK
RETURN
FUSE PANEL
VDD SUPPLY
VDD RETURN
AC
.450A
4.5V
2A
TWISTED PAIR
VDD SUPPLY (1)
VDDGND RETURN (1)
JC
.448A
DIGITAL JUMPER CABLES
VDD SUPPLY (2)
VDD RETURN (2)
HYBRID

ISOLATED POWER REQUIRED PER QUADRANT

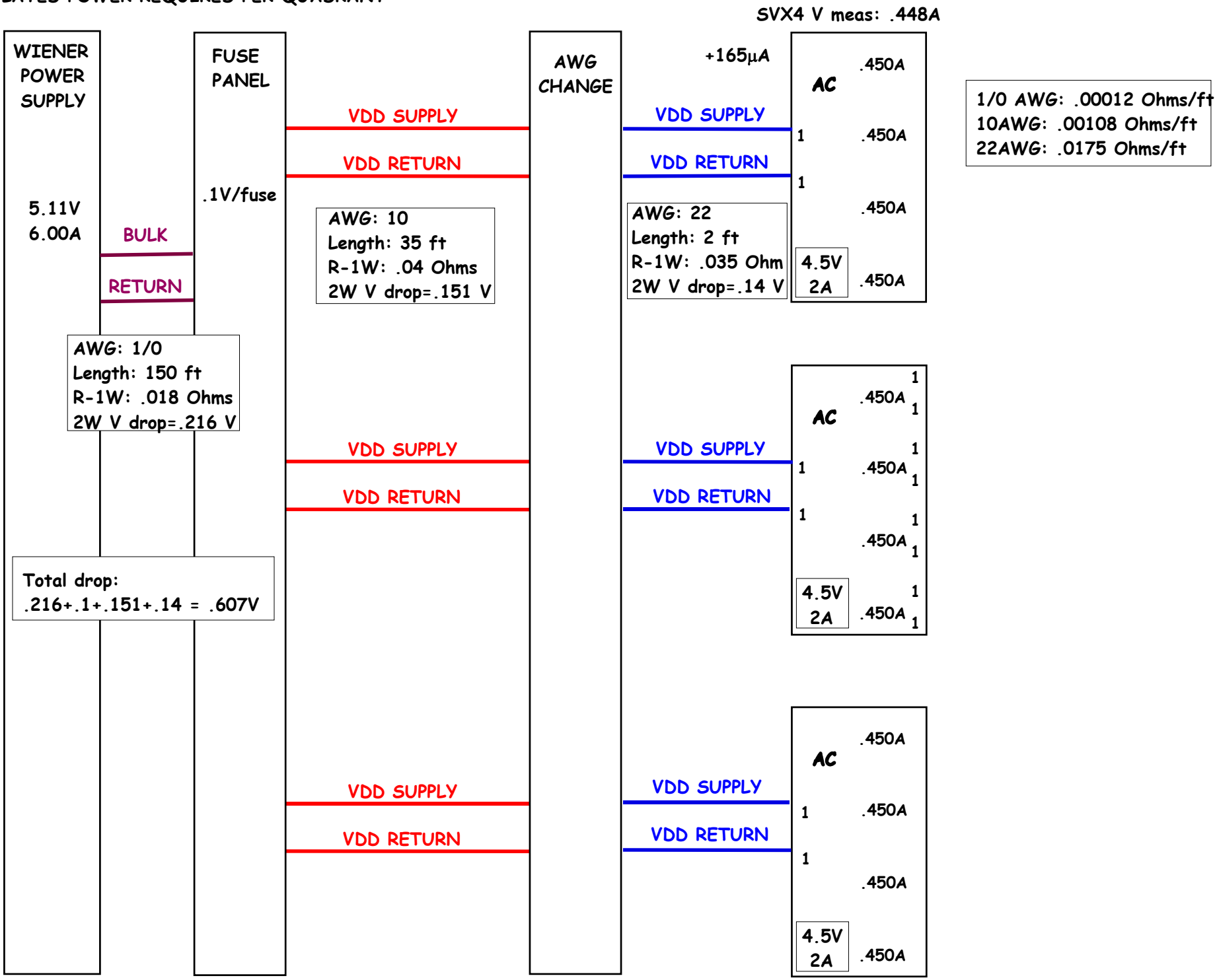

RunIIb Layer 0 Power Distribution Design

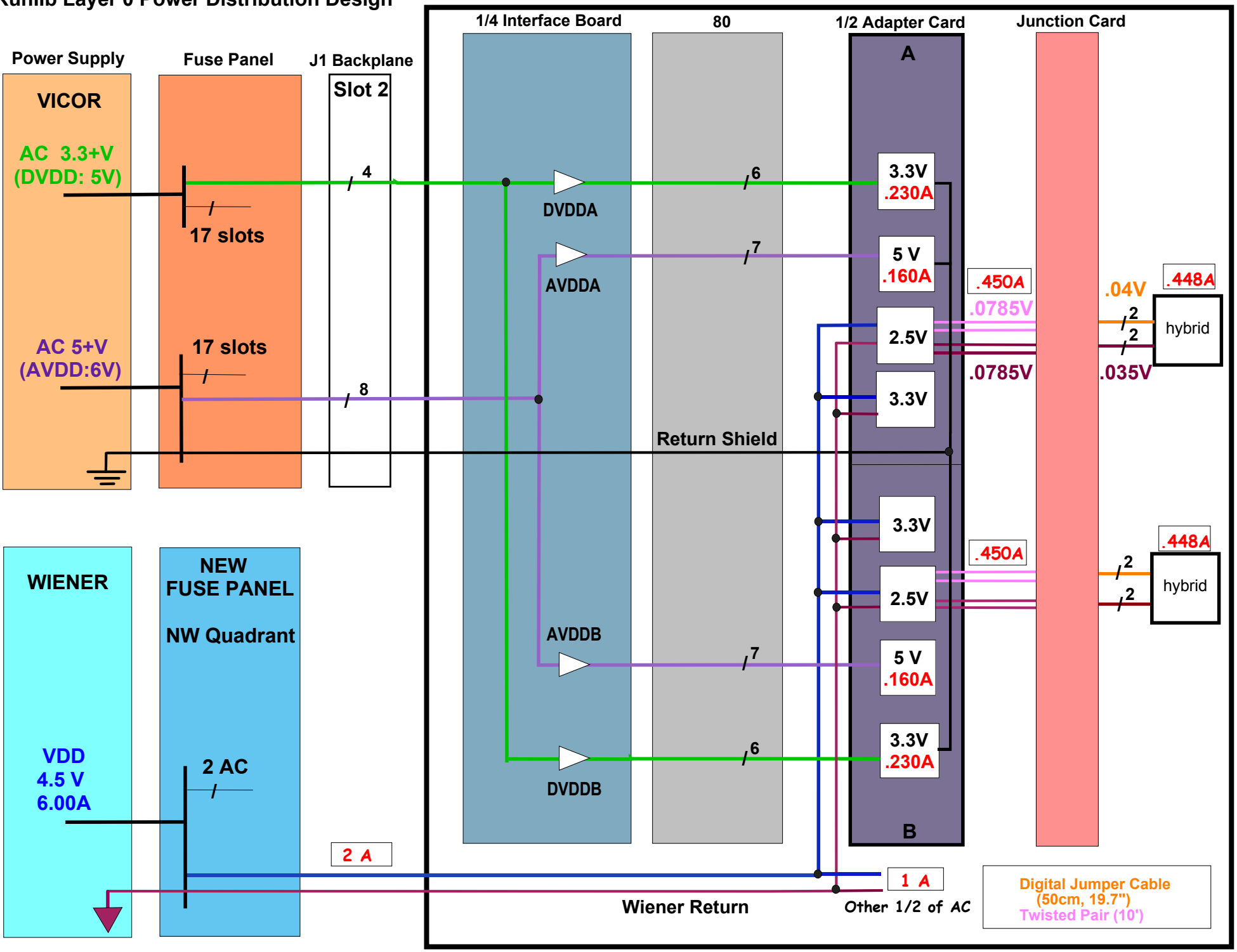

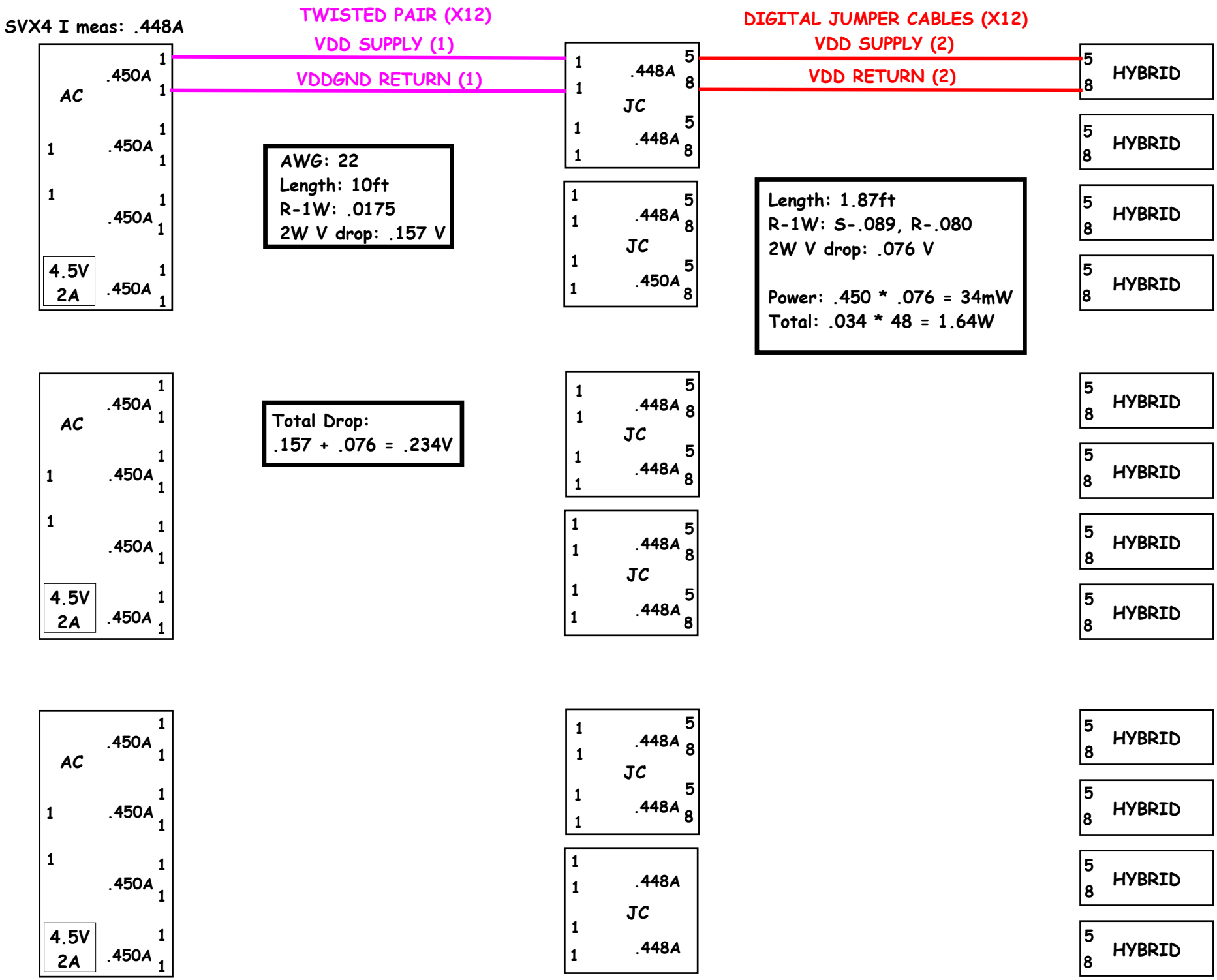
SVX4 I meas: .448A
TWISTED PAIR (X12)
VDD SUPPLY (1)
VDDGND RETURN (1)
DIGITAL JUMPER CABLES (X12)
VDD SUPPLY (2)
VDD RETURN (2)
AC
.450A
4.5V
2A
JC
.448A
.450A
HYBRID
AWG: 22
Length: 10ft
R-1W: .0175
2W V drop: .157 V
Length: 1.87ft
R-1W: S-.089, R-.080
2W V drop: .076 V
Power: .450 * .076 = 34mW
Total: .034 * 48 = 1.64W
Total Drop:
.157 + .076 = .234V

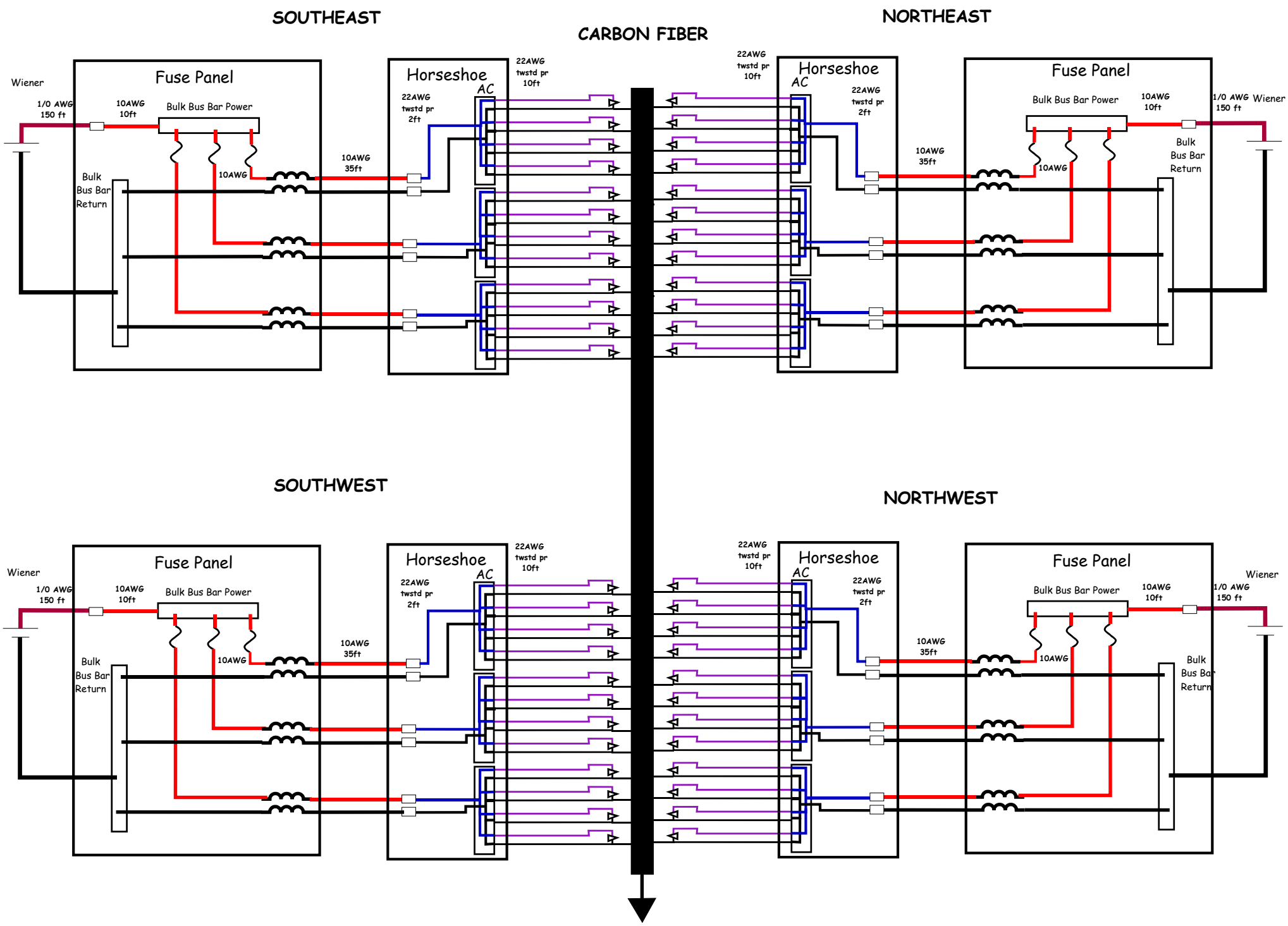
SOUTHEAST
CARBON FIBER
NORTHEAST
Wiener
Fuse Panel
1/0 AWG
150 ft
10AWG
10ft
Bulk Bus Bar Power
10AWG
Bulk
Bus Bar
Return
10AWG
35ft
Horseshoe
AC
22AWG
twstd pr
2ft
22AWG
twstd pr
10ft
22AWG
twstd pr
10ft
Horseshoe
AC
22AWG
twstd pr
2ft
10AWG
35ft
Fuse Panel
Bulk Bus Bar Power
10AWG
10ft
1/0 AWG
150 ft
Wiener
10AWG
Bulk
Bus Bar
Return
SOUTHWEST
NORTHWEST
Wiener
Fuse Panel
1/0 AWG
150 ft
10AWG
10ft
Bulk Bus Bar Power
10AWG
Bulk
Bus Bar
Return
10AWG
35ft
Horseshoe
AC
22AWG
twstd pr
2ft
22AWG
twstd pr
10ft
22AWG
twstd pr
10ft
Horseshoe
AC
22AWG
twstd pr
2ft
10AWG
35ft
Fuse Panel
Bulk Bus Bar Power
10AWG
10ft
1/0 AWG
150 ft
Wiener
10AWG
Bulk
Bus Bar
Return

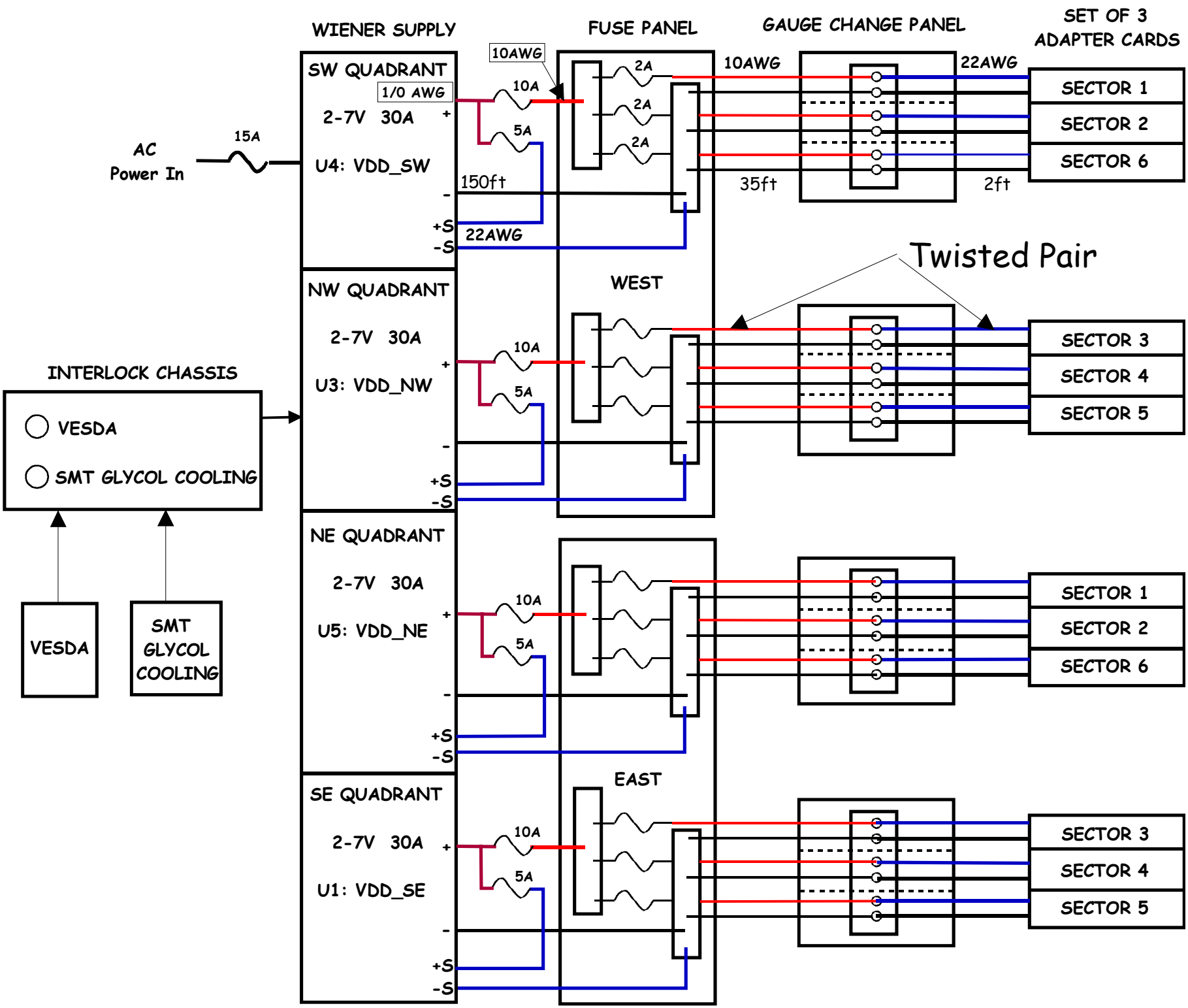
WIENER SUPPLY
FUSE PANEL
GAUGE CHANGE PANEL
SET OF 3 ADAPTER CARDS
SW QUADRANT
2-7V 30A
U4: VDD_SW
1/0 AWG
10AWG
10A
5A
150ft
22AWG
+S
-S
AC Power In
15A
2A
2A
2A
10AWG
22AWG
35ft
2ft
SECTOR 1
SECTOR 2
SECTOR 6
Twisted Pair
NW QUADRANT
2-7V 30A
U3: VDD_NW
WEST
SECTOR 3
SECTOR 4
SECTOR 5
INTERLOCK CHASSIS
VESDA
SMT GLYCOL COOLING
VESDA
SMT GLYCOL COOLING
NE QUADRANT
2-7V 30A
U5: VDD_NE
SECTOR 1
SECTOR 2
SECTOR 6
SE QUADRANT
2-7V 30A
U1: VDD_SE
EAST
SECTOR 3
SECTOR 4
SECTOR 5
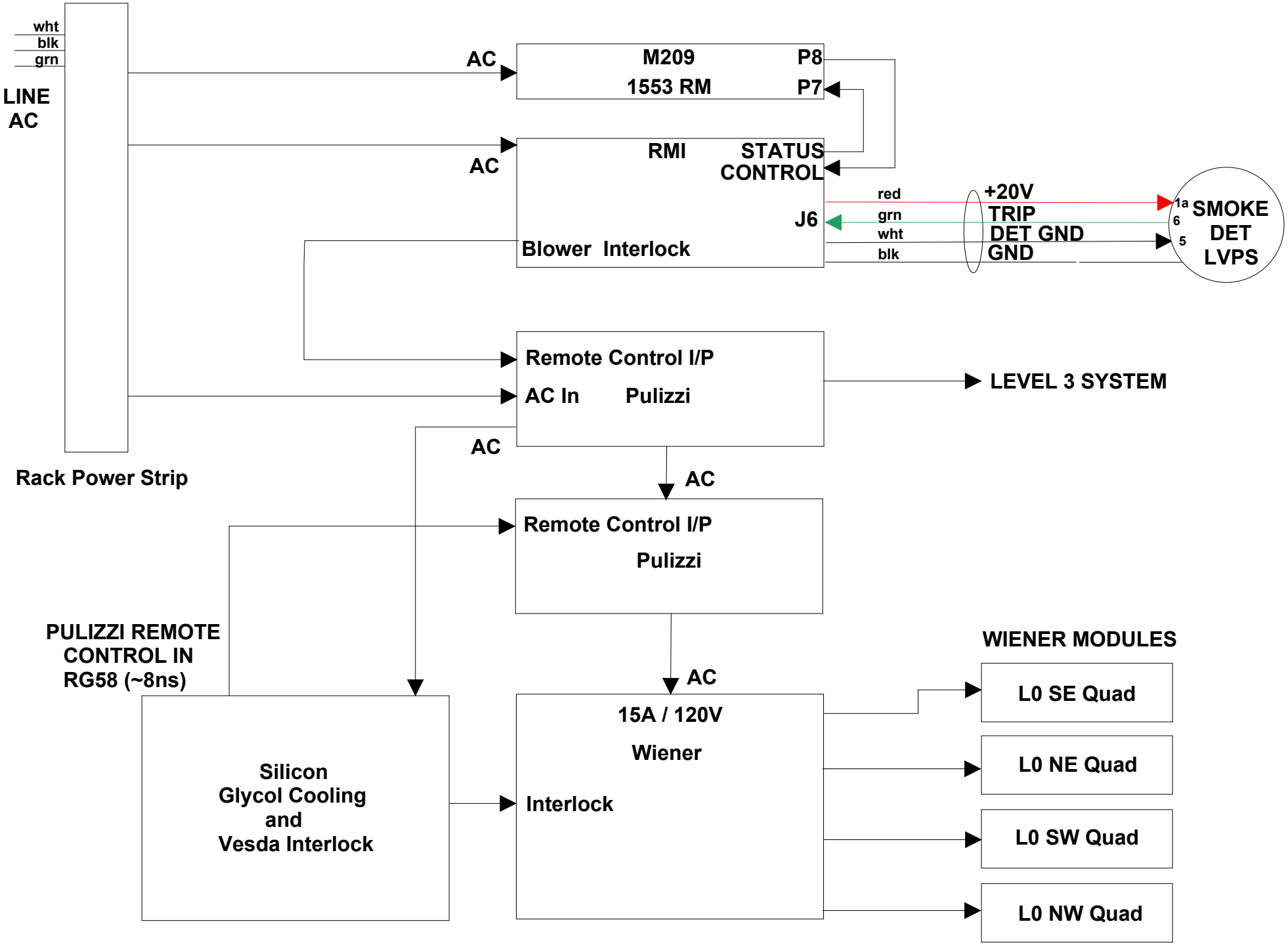
RMI SAFETY SYSTEM