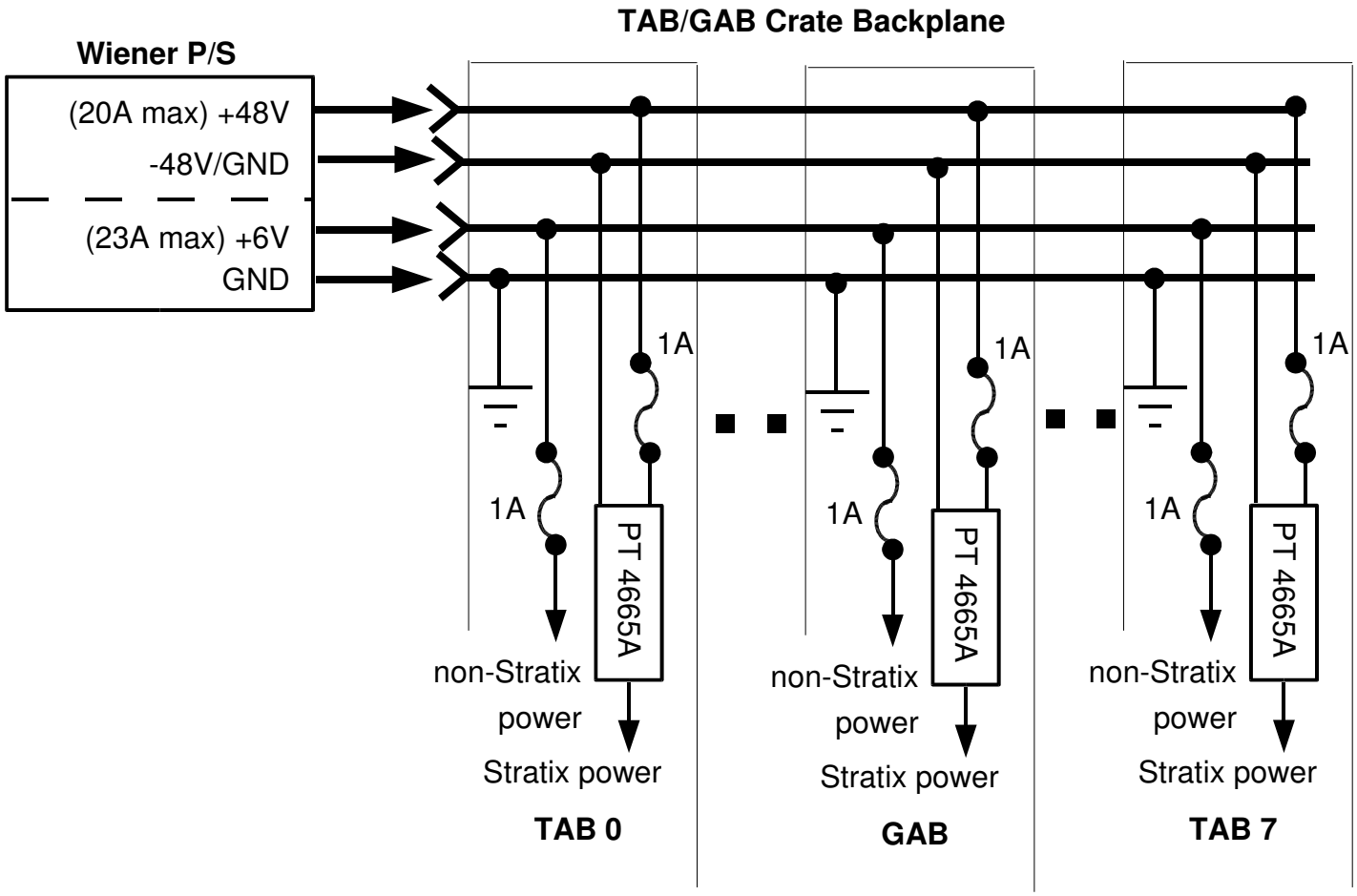

TAB/GAB – Backplane Connection
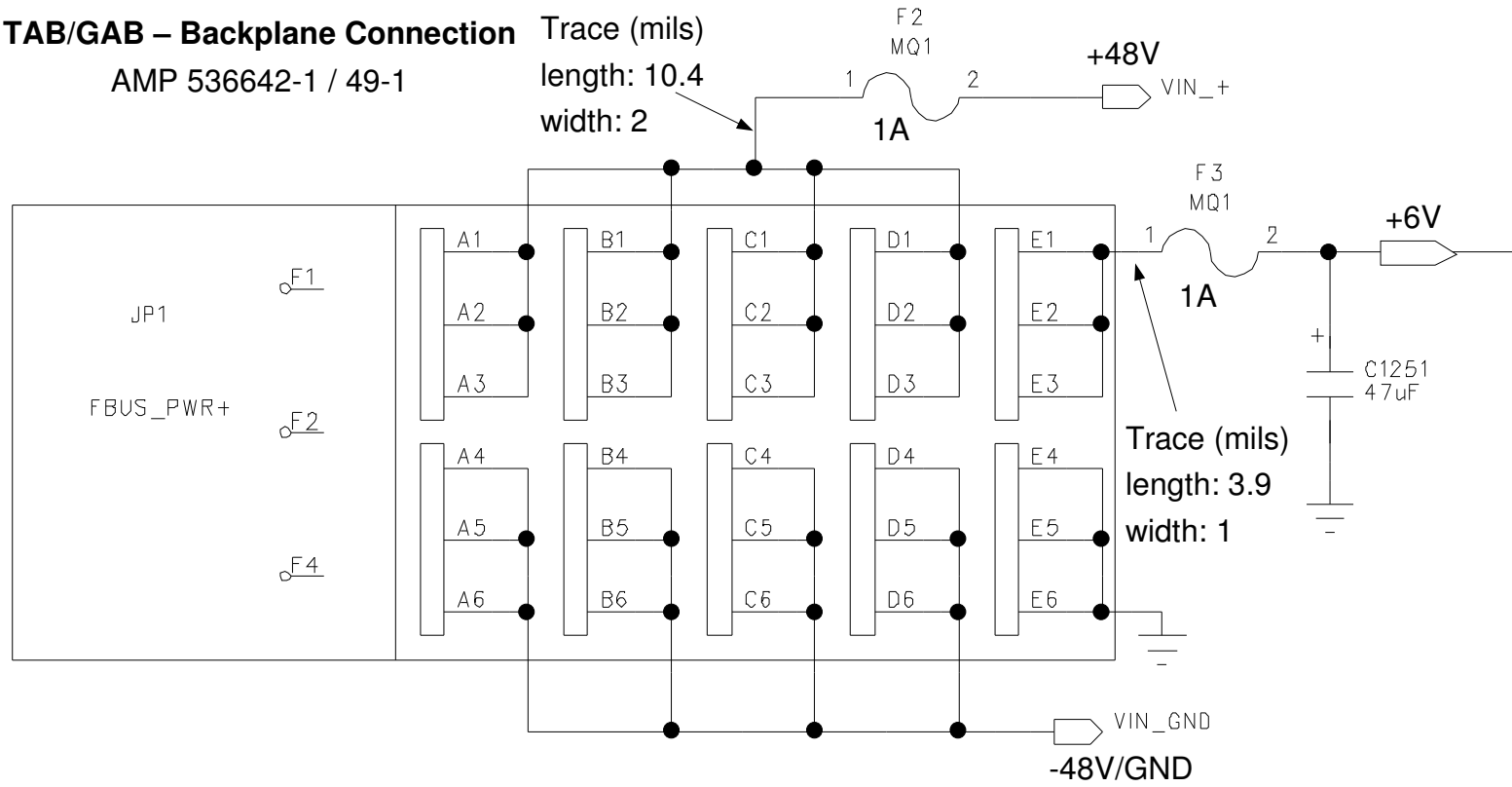
AMP 536642-1 / 49-1