REV.	DESCRIPTION	DRAWN	DATE
		APPROVED	DATE

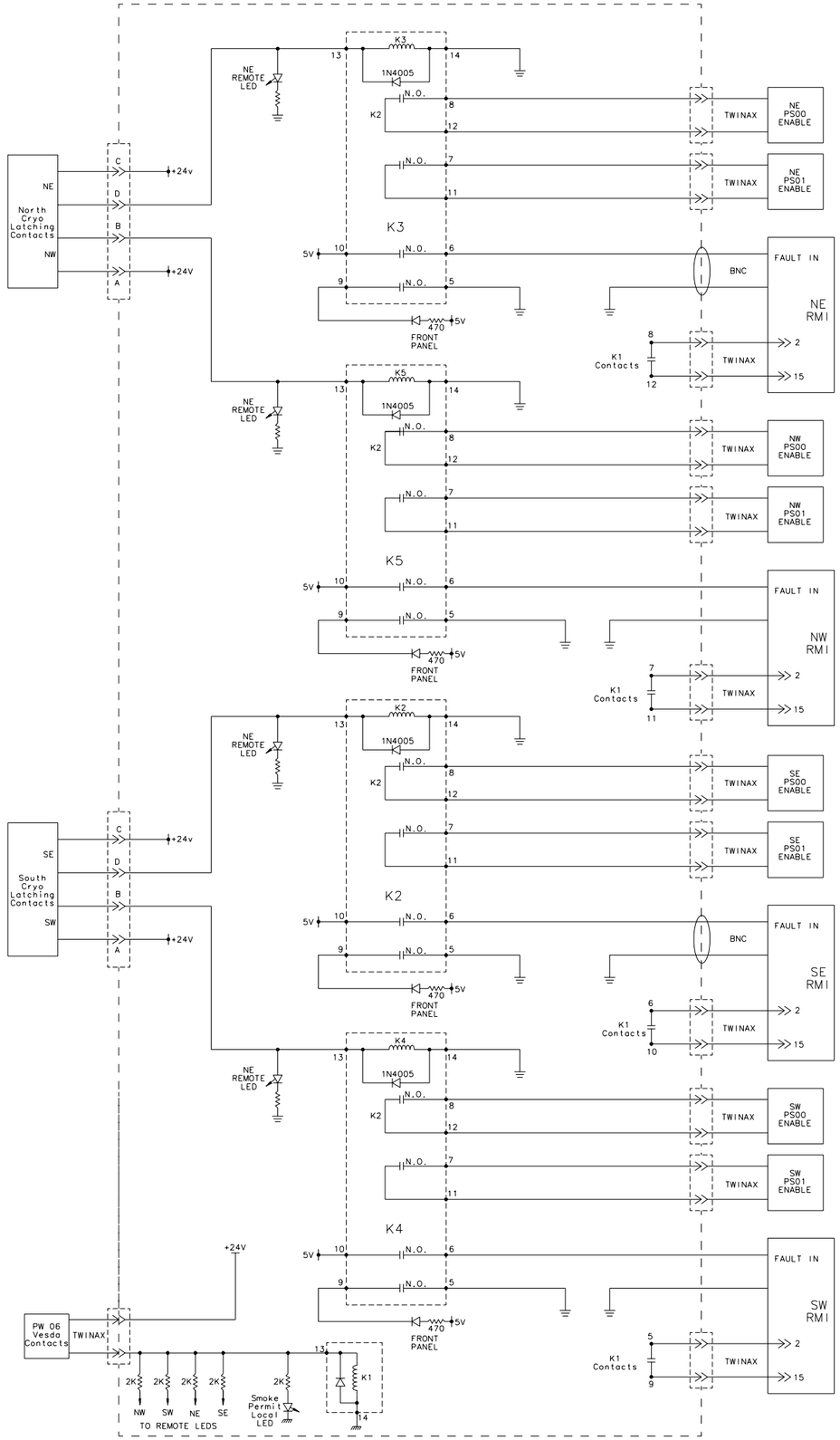

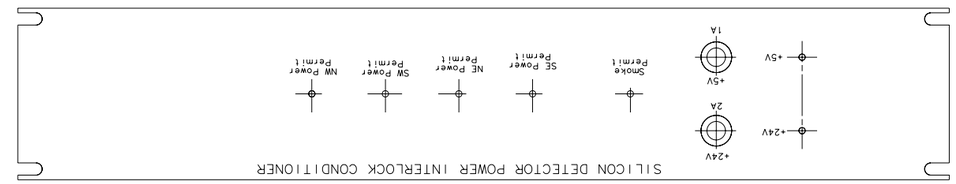

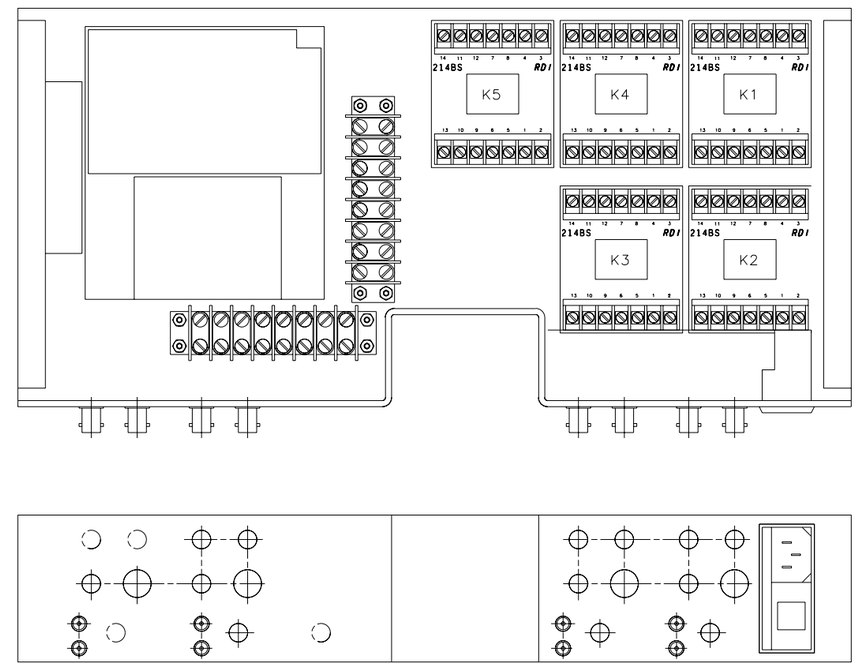

RELAY TYPE
POTTER & BRUMFIELD
KHAu-17D11-24

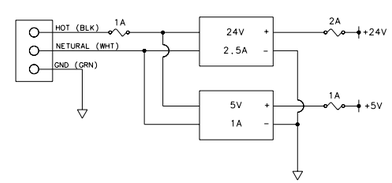

FRONT PANEL LED

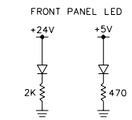

ITEM NO.	PART NO.	DESCRIPTION OR SIZE	QTY. REQ.

PARTS LIST

UNLESS OTHERWISE SPECIFIED			ORIGINATOR	FOGLESONG	2/26/01
FRACTIONS	DECIMALS	ANGLES	DRAWN	MATESKI	2/26/01
±	±	±	CHECKED		
1. BREAK ALL SHARP EDGES .015 MAX.			APPROVED		
2. DO NOT SCALE DRWG.			USED ON		
3. DIMENSIONING IN ACCORD WITH ANSI Y14.5M-1982 STD'S.					
4. ALL DIMENSIONS ARE IN INCHES.			MATERIAL		
125 MAX. ALL MACHINED SURFACES					

FERMI NATIONAL ACCELERATOR LABORATORY
UNITED STATES DEPARTMENT OF ENERGY

D0 DETECTOR UPGRADE SILICON TRACKING INTERLOCK INTERFACE

SCALE	DRAWING NUMBER	SHEET NO.	REV.
	3823.112-EE-330359	2 OF 2	

SEE SHEET 1 OF 2 3823.112-EB-330359