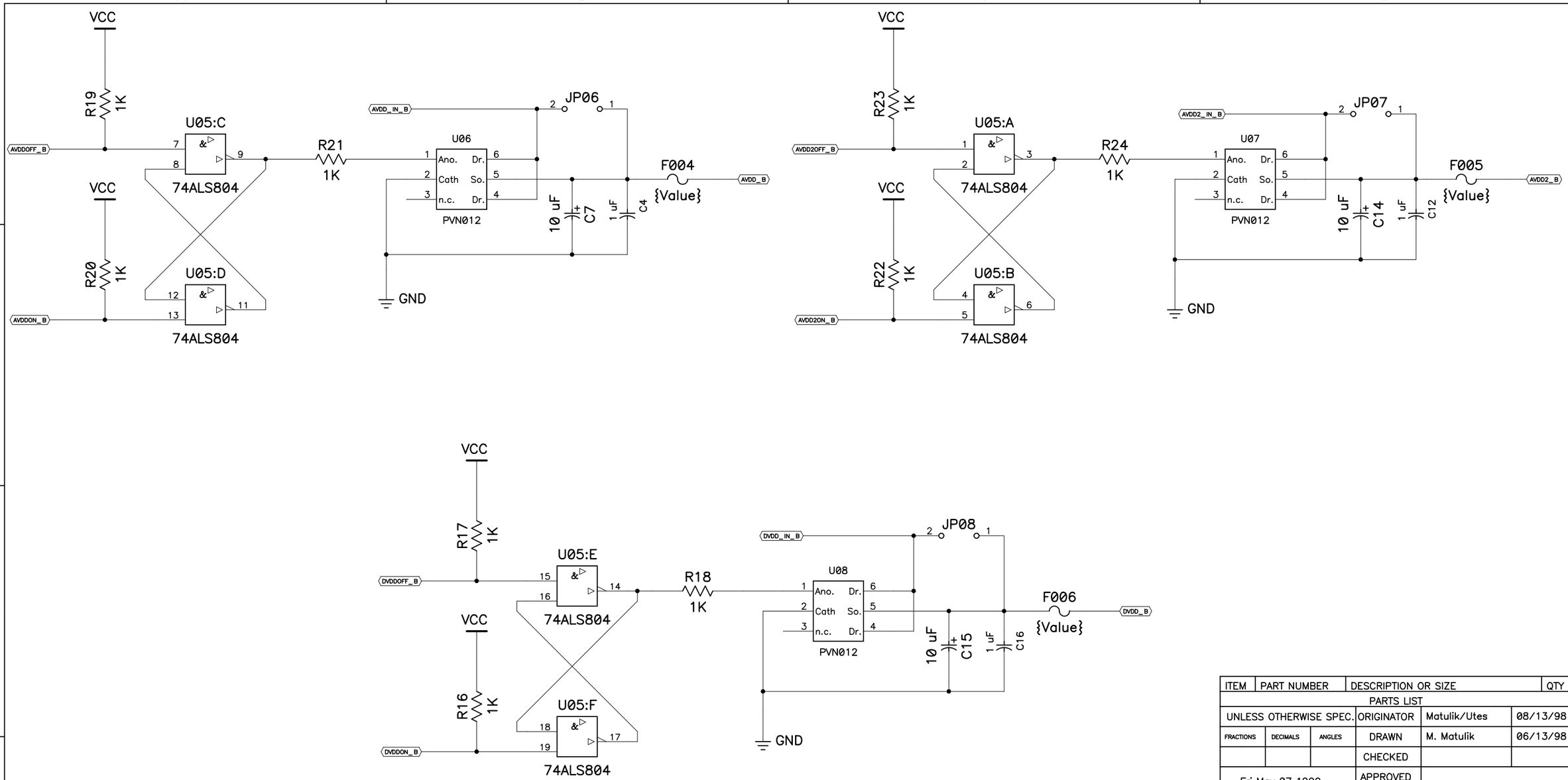

ITEM	PART NUMBER	DESCRIPTION OR SIZE	QTY
PARTS LIST			

UNLESS OTHERWISE SPEC.			ORIGINATOR	Matulik/Utes	08/13/98
FRACTIONS	DECIMALS	ANGLES	DRAWN	M. Matulik	06/13/98
			CHECKED		
Fri May 07 1999 09:36:21			APPROVED		
			USED ON		
			MATERIAL		

FERMI NATIONAL ACCELERATOR LABORATORY

UNITED STATES DEPT. OF ENERGY

Interface Module Prototype

SCALE	FILMED	DRAWING NUMBER	Sheet 5 of 5	REV.
		3823.112-EB-330109		F