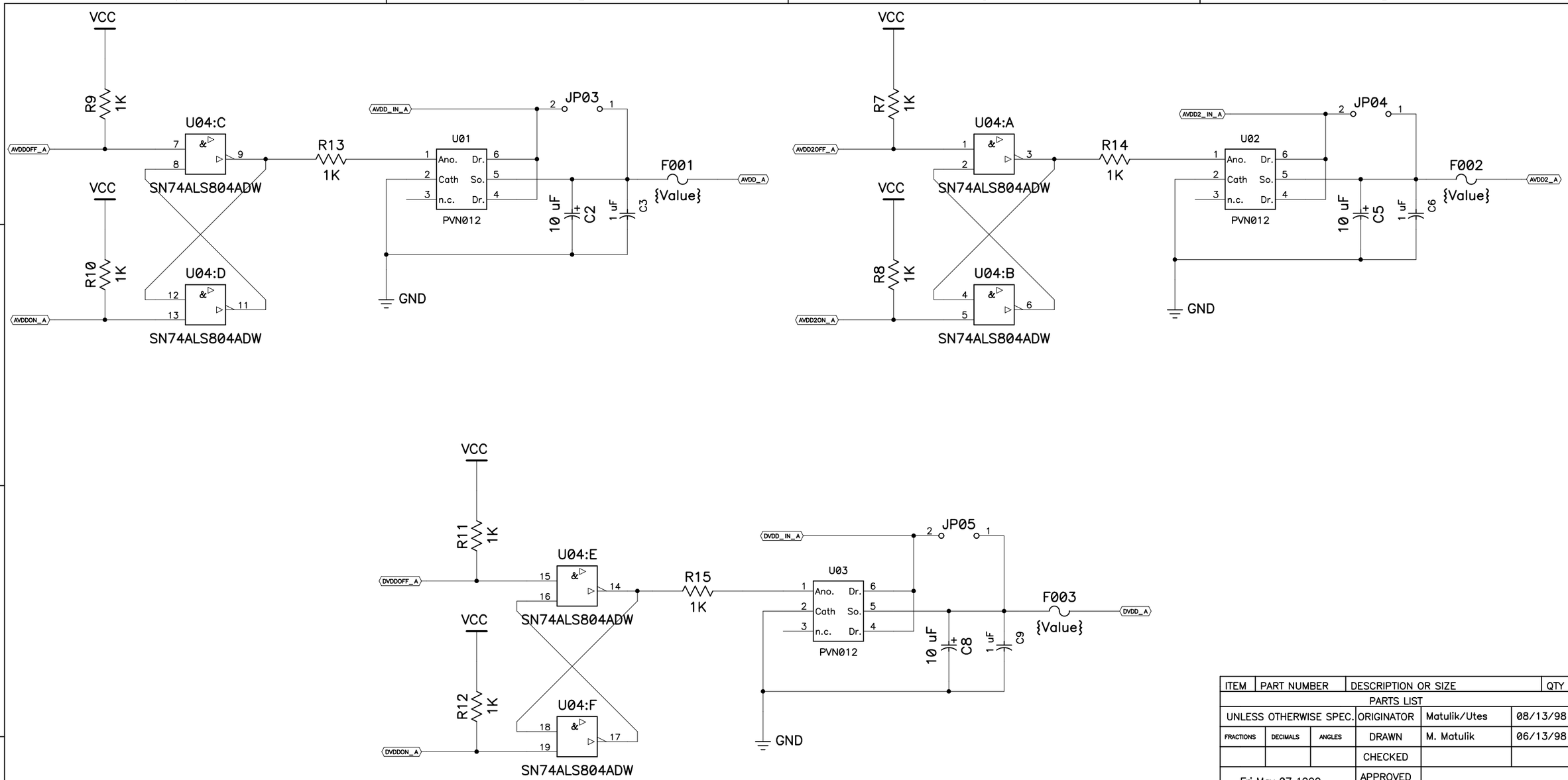

ITEM	PART NUMBER	DESCRIPTION OR SIZE	QTY
PARTS LIST			

UNLESS OTHERWISE SPEC.	ORIGINATOR	Matulik/Utes	08/13/98
FRACTIONS / DECIMALS / ANGLES	DRAWN	M. Matulik	06/13/98
	CHECKED		
Fri May 07 1999 09:36:00	APPROVED		
	USED ON	D0 Silicon Vertex Detector	
	MATERIAL		

FERMI NATIONAL ACCELERATOR LABORATORY
UNITED STATES DEPT. OF ENERGY

Interface Module Prototype

SCALE	FILMED	DRAWING NUMBER	Sheet 3 of 5	REV.
		3823.112-EB-330109		F