L0 Infrastructure

- Mapping
- Installations
  - Horseshoe Area
    - Adapter Card
  - Cathedral
    - Low Voltage Fuse Panel
  - Platform
    - High Voltage Distribution
  - MCH1
    - Low Voltage Power Supply
  - MCH2
    - High Voltage Power Supply, Trigger

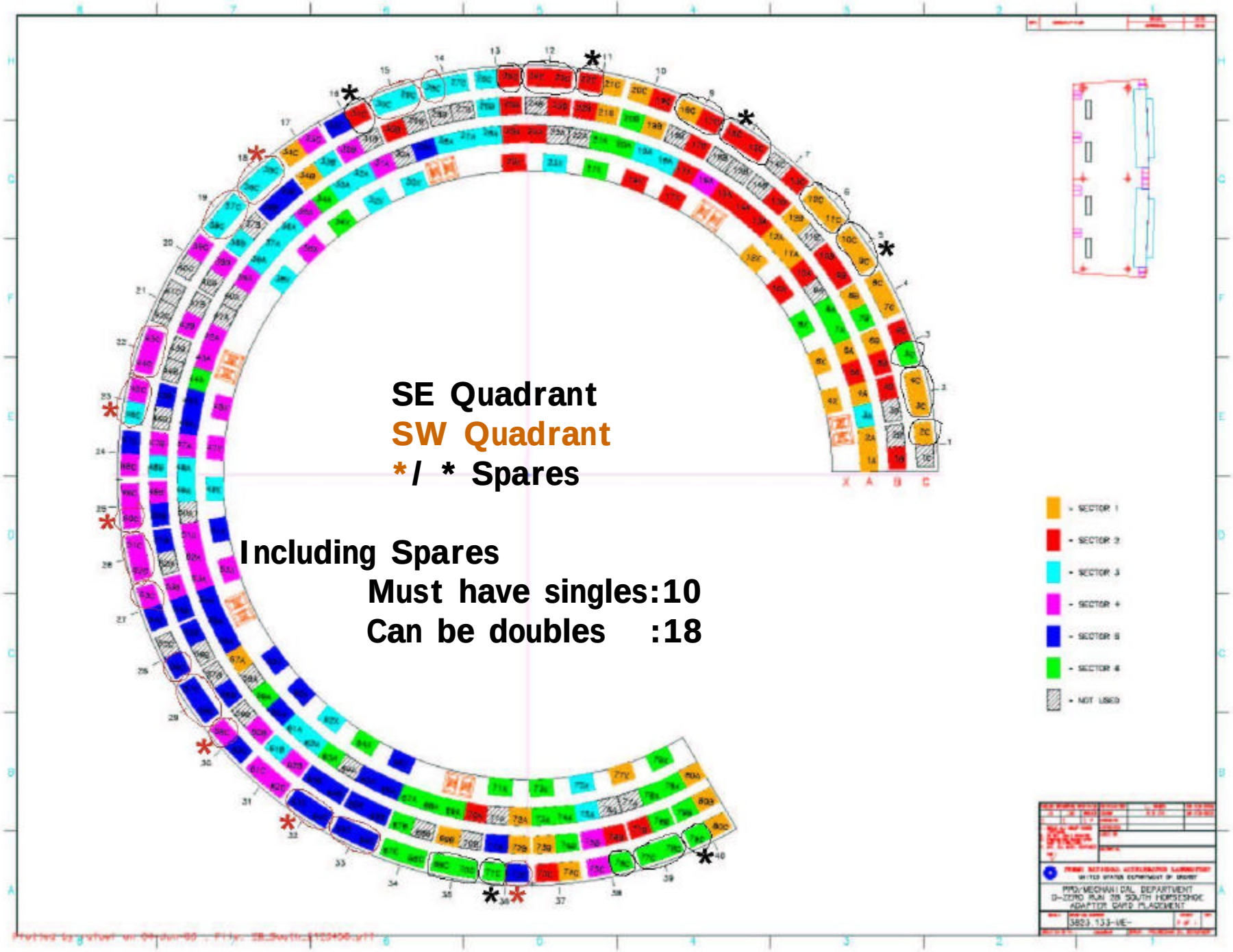
SE Quadrant
SW Quadrant
*/ * Spares
Including Spares
Must have singles:10
Can be doubles :18
SECTOR 1
SECTOR 2
SECTOR 3
SECTOR 4
SECTOR 5
SECTOR 6
NOT USED
PROJ/MECHANICAL DEPARTMENT
D-ZERO RUN 2B SOUTH HORSESHOE
ADAPTOR CARD PLACEMENT
3823.133-ME-

South C Row

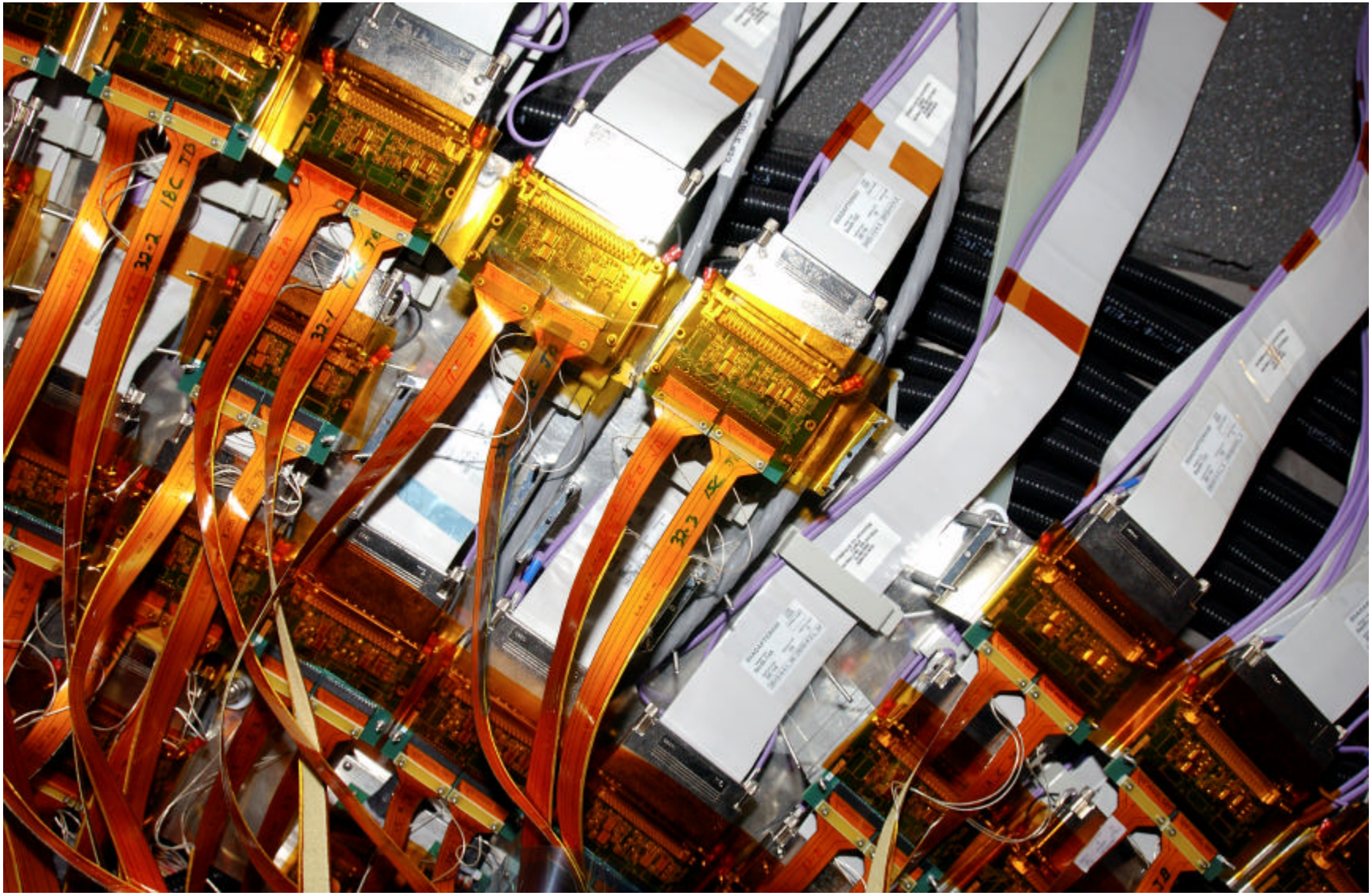

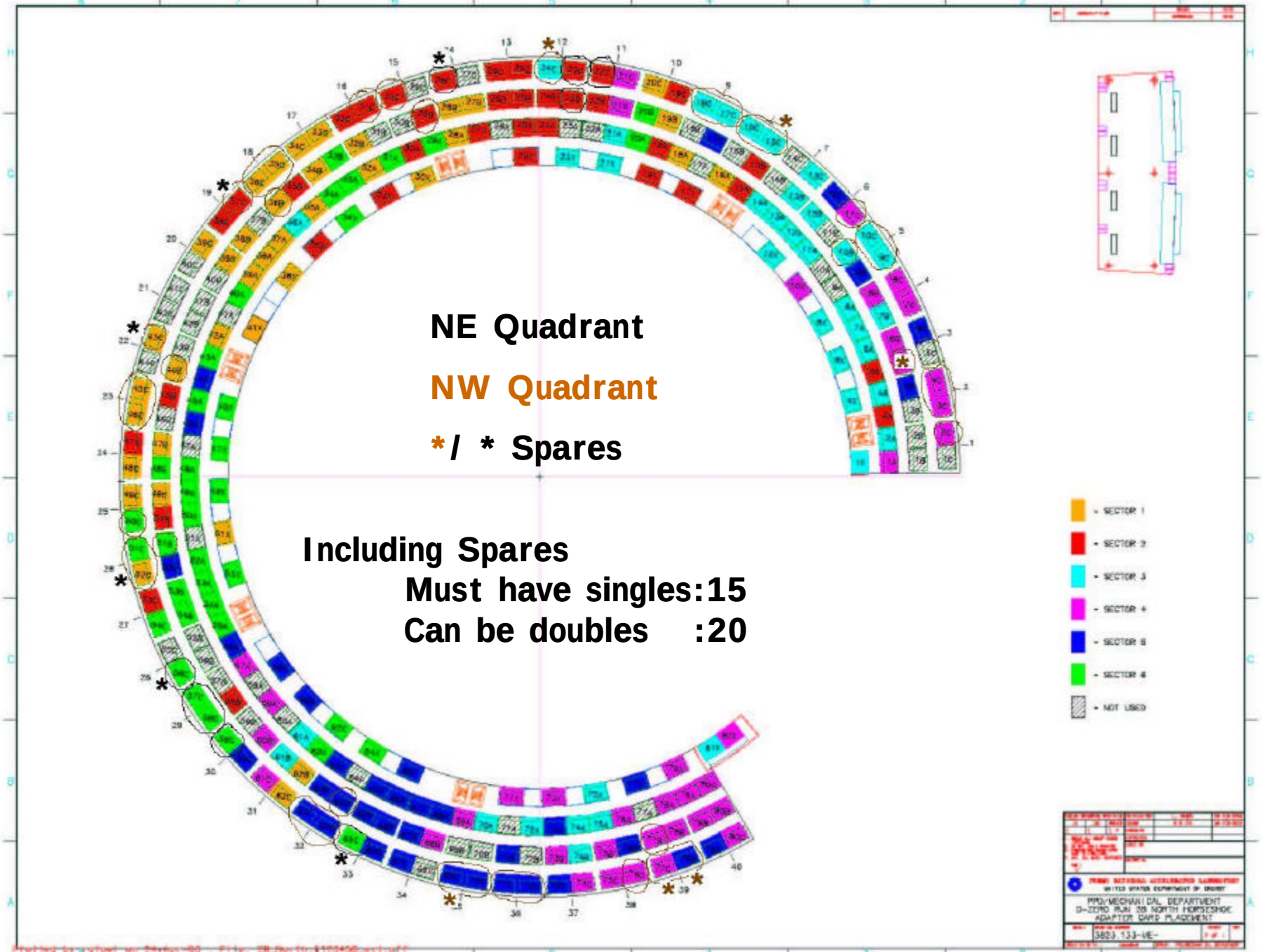
NE Quadrant
NW Quadrant
*/ * Spares
Including Spares
Must have singles:15
Can be doubles :20
SECTOR 1
SECTOR 2
SECTOR 3
SECTOR 4
SECTOR 5
SECTOR 6
NOT USED
FNAL NATIONAL ACCELERATOR LABORATORY
UNITED STATES DEPARTMENT OF ENERGY
PROJ-MECHANICAL DEPARTMENT
D-ZERO RUN 2B NORTH HORSESHOE
ADAPTOR BARR PLACEMENT
3823.133-ME-

North C Row

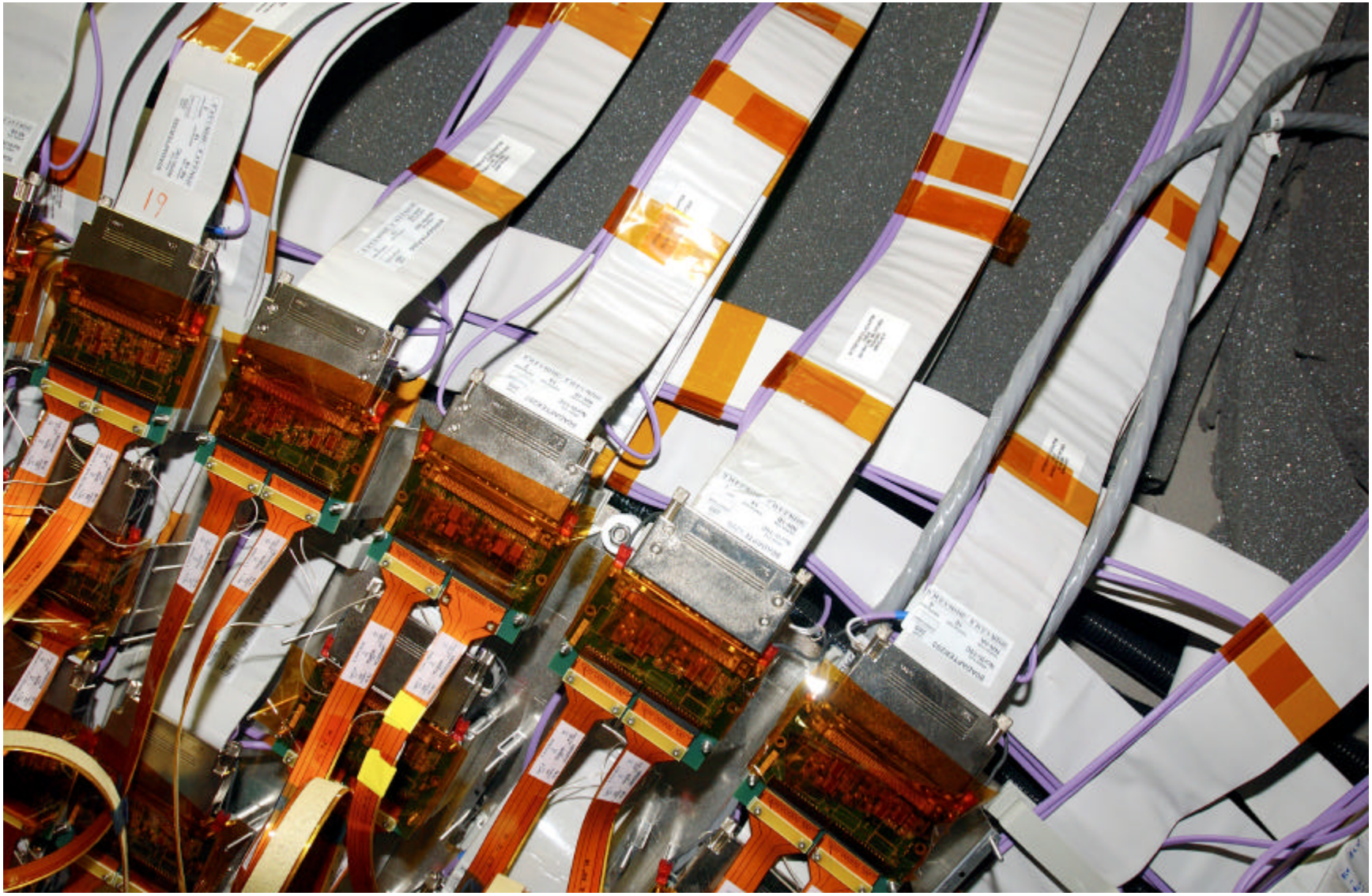

I/B Crate: 1 quadrant

																						SOUTHEAST
																						INTERFACE
	1A														1B							
	I	III	I	I	III	II/III	I/IV	II/III	I/II		III	II / III	IV	II	II / III	III	I/IV	I/III	III/IV		TYPE
1	2	3	4	5	6	7	8	9	10	11	12	13	14	15	16	17	18	19	20	21	SLOT
	B_3	B_9	B-9	B_6	B_6	B_9	F_6	F_8	L0-3-12		F-6	F-8	L0-12-12		F-8	L0-2-12	F-6	F-8	L0-4-12		1
	B_3	B_9	B_9	B_6	B_6	B_9	F_6	F_8	L0-3-34		F-6	F-8	L0-12-34	F-6	F-8	L0-2-34	F-6	F-8	L0-4-34		2
	B_3	B_9			B_6	B_9	F-6	F-8	L0-3-56		F-6		L0-12-56	F-6	F-8	L0-2-56	F-6	F-8	L0-4-56		3
				B_6		B_9			OPEN			F-8	OPEN	F-6		OPEN			OPEN		4

	0A														0B						
	I	III	I	I	III	I	II	II / III	III / IV		I	III	I / III	I	III	I	III	III	II / IV		
1	2	3	4	5	6	7	8	9	10	11	12	13	14	15	16	17	18	19	20	21	
	B_3	B_9	B-9	B_6	B_6	B_9	F_6	F_8	L0-11-12		B_3	B_9	B-9	B_6	B_6	B_9	F_6	F_8	L0-1-12		
	B_3	B_9	B_9	B_6	B_6	B_9	F_6	F_8	L0-11-34		B_3	B_9	B_9	B_6	B_6	B_9	F_6	F_8	L0-1-34		
	B_3	B_9			B_6	B_9	F-6	F-8	L0-11-56		B_3	B_9		B_6		B_9	F-6	F-8	L0-1-56		
				B_6		B_9			OPEN					B_6		B_9			OPEN		

Sector 1

Sector 2

Sector 3

Using H-disk positions…..

Total number of I/B that need modifications: 24

Total number of acquisition channels available: 96

Total number of available hybrid inputs: 192

Sequencer Crate:1 quadrant

Southeast

																					SEQUENCER
	1A														1B			SEQ7			
1	2	3	4	5	6	7	8	9	10	11	12	13	14	15	16	17	18	19	20	21	
	B_3	B_9	B-9	B_6	B_9	F_6	F_8	F-6	L0-3-12	L0-4-12											1
	B_3	B_9	B_9	B_6	B_9	F_6	F_8	F-6	L0-3-34	L0-4-34											2
	B_3	B_9	B_6	B_6	B_9	F-6	F-8	F-6	L0-3-56	L0-4-56											3
			B_6	B_6	B_9	F-8	F-8	F-8	OPEN	OPEN											4

0A															0B		SEQ6			
	I	III	I / III	I	I	II	II / III	III	III / IV	IV	I	III	I / III	I	I	III	III	II	II / IV	IV
1	2	3	4	5	6	7	8	9	10	11	12	13	14	15	16	17	18	19	20	21
	B_3	B_9	B-9	B_6	B_9	F_6	F_8	F-6	L0-11-12	L0-12-12	B_3	B_9	B-9	B_6	B_9	F_6	F_8	F-6	L0-1-12	L0-2-12
	B_3	B_9	B_9	B_6	B_9	F_6	F_8	F-6	L0-11-34	L0-12-34	B_3	B_9	B_9	B_6	B_9	F_6	F_8	F-6	L0-1-34	L0-2-34
	B_3	B_9	B_6	B_6	B_9	F-6	F-8	F-6	L0-11-56	L0-12-56	B_3	B_9	B_6	B_6	B_9	F-6	F-8	F-6	L0-1-56	L0-2-56
			B_6	B_6	B_9	F-8	F-8	F-8	OPEN	OPEN			B_6	B_6	B_9	F-8	F-8	F-8	OPEN	OPEN

Sector 1

Sector 2

Sector 3

Using H-disk positions…..

Total number of Sequencers that need firmware changes: 24

(4 per crate)

VRB: 1 quadrant

VRB																				
										M211-1										
	1	2	3	4	5	6	7	8	9	10	11	12	13	14	15	16	17	18	19	20
0									B_3	B_9	B-9	B_6	B_9	0	F_6	F_8	F-6	L0-1-12	L0-2-12	
1									B_3	B_9	B_9	B_6	B_9	1	F_6	F_8	F-6	L0-1-34	L0-2-34	
2									B_3	B_9	B_6	B_6	B_9	2	F-6	F-8	F-6	L0-1-56	L0-2-56	
3											B_6	B_6	B_9	3	F-8	F-8	F-8	OPEN	OPEN	

VRB																				
										M205-1										
	1	2	3	4	5	6	7	8	9	10	11	12	13	14	15	16	17	18	19	20
0									B_3	B_9	B-9	B_6	B_9	0	F_6	F_8	F-6	L0-11-12	L0-12-12	
1									B_3	B_9	B_9	B_6	B_9	1	F_6	F_8	F-6	L0-11-34	L0-12-34	
2									B_3	B_9	B_6	B_6	B_9	2	F-6	F-8	F-6	L0-11-56	L0-12-56	
3											B_6	B_6	B_9	3	F-8	F-8	F-8	OPEN	OPEN	

VRB																				
										M210-1										
	1	2	3	4	5	6	7	8	9	10	11	12	13	14	15	16	17	18	19	20
0									B_3	B_9	B-9	B_6	B_9	0	F_6	F_8	F-6	L0-3-12	L0-4-12	
1									B_3	B_9	B_9	B_6	B_9	1	F_6	F_8	F-6	L0-3-34	L0-4-34	
2									B_3	B_9	B_6	B_6	B_9	2	F-6	F-8	F-6	L0-3-56	L0-4-56	
3											B_6	B_6	B_9	3	F-8	F-8	F-8	OPEN	OPEN	

Using H-disk positions…..

Sector 1

Sector 2

Sector 3

Total # of fiber moves from VRB to Splitter wall: 72 + spares (96)

Total # new fibers from Splitter to VRB: 72 + spares

Total # of new splitters: 36

Horseshoe

- AC placement
  - S: All are on C row. N: 8 are on B row.
  - 25 single positions. 38 double positions.
  - Some room for extending length of card.
  - Need to determine if cooling is still required.
- Shield
  - Since all ACs are not being replaced, height of horseshoe will not accommodate shield.
- Clock jumper
  - Clock cards are under ACs. Easy to install bullets.

Low Voltage

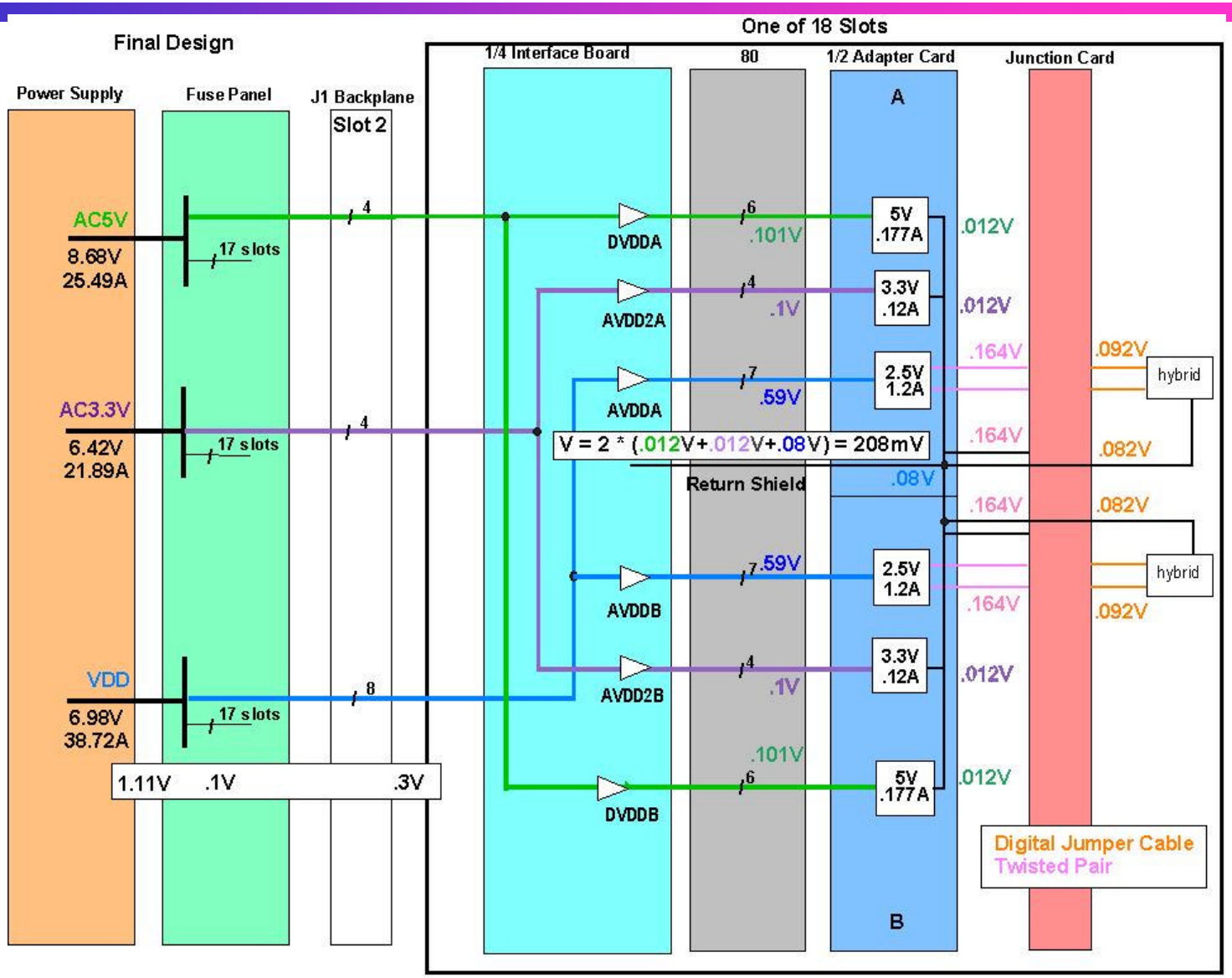
Final Design
One of 18 Slots
Power Supply
Fuse Panel
J1 Backplane
Slot 2
1/4 Interface Board
80
1/2 Adapter Card
Junction Card
A
AC5V
8.68V
25.49A
17 slots
4
DVDDA
6
.101V
5V
.177A
.012V
AVDD2A
4
.1V
3.3V
.12A
.012V
AVDDA
7
.59V
2.5V
1.2A
.164V
.092V
hybrid
AC3.3V
6.42V
21.89A
17 slots
4
V = 2 * (.012V+.012V+.08V) = 208mV
.164V
.082V
Return Shield
.08V
.164V
.082V
AVDDB
7
.59V
2.5V
1.2A
.164V
.092V
hybrid
VDD
6.98V
38.72A
17 slots
8
AVDD2B
4
.1V
3.3V
.12A
.012V
1.11V
.1V
.3V
.101V
DVDDB
6
5V
.177A
.012V
Digital Jumper Cable
Twisted Pair
B

Cathedral:LV Power Supply

- If VICOR is used:
  - Need to determine---
    - Power dissipated on AC due to reduction in voltage and other active components.
      - AVDD1: 5.94V…..need 2.5V for SVX
      - AVDD2: 4.14V…..need 3.3V for AC
      - DVDD: 5.36V……need 5V for AC
  - Requires work on AC.

Cathedral:LV Power Supply

- If Wiener is used:
  - Can't use current fuse panel due to bussing of power to banks of slots.
    - Extract 3 sets of wires per slot from old fuse panel and reroute to new fuse panel.(72 total sets)
    - Design CAN to VME interface for monitoring.
      - Card to handle conversion from CAN to VME is in house.
      - Fritz has been involved in writing the required software drivers.
    - Design small fuse panel to fit in middle of cathedral.
    - Rework power distribution using prototype supplies.

Cathedral: LV Fuse Panel

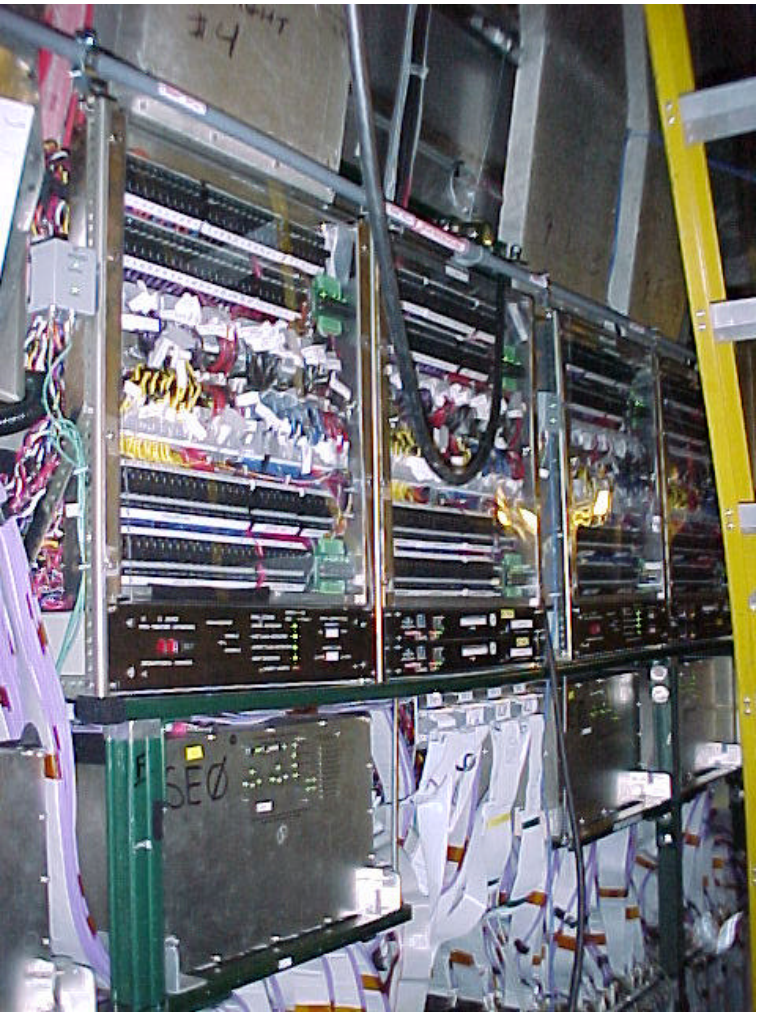

East: w:20.5” h:20” d:11.5”

West:w:18.5” h:20” d:8”

Power Requirements

- SVX4
  - Crate 0:
    - Slots 10, 20 ~3A
  - Crate 1:
    - Slots 10,14,17,20 ~6A
  - Total Needed per quadrant : 9 A
    - Have 2 30A 2-7V supplies.
- AC
  - 3.3V
    - Have 2 30A 2-7V supplies.
  - 5V
    - Have 2 30A 2-7V supplies.

MCH1: LV Power Supplies

U1: VDD
2.5V 30A

U3: AC3.3V
3.3V 30A

U5: AC5V
5V 30A

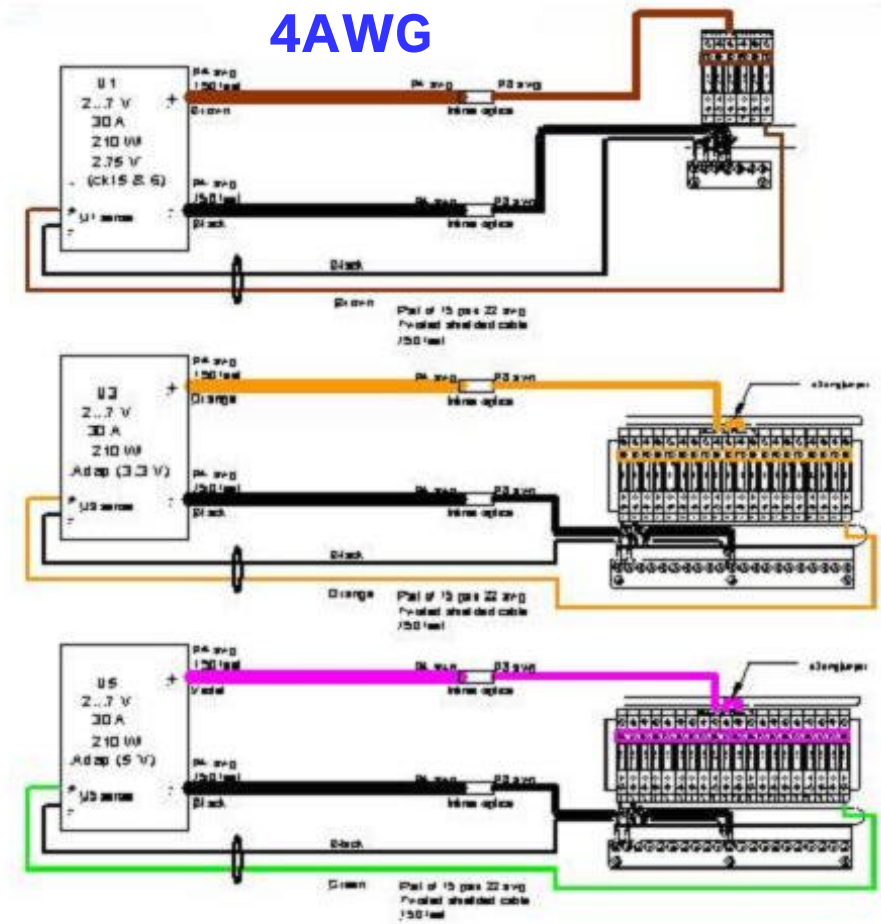

MCH1: LV Power Supply

- Install rack for power supplies.
- Run power cables to fuse panel in cathedral.
  - Power 4AWG
  - Remote Sense
- Run FIRUS/VESDA interlock cables from Platform to MCH1.
  - Requires modification of COW (Can-O-Worms) to bring out interlocks.

MCH2 - HV

- Equipment installations:
  - MCH2: HV crate.
  - Platform: Patch Panel.
- Cable installations:
  - Current hardware limitation of 300V.
    - Need 144 new cables + spares
      - MCH2 HV to Platform Patch Panel.
      - Platform Patch Panel to Horseshoe
- Trigger installations:
  - Mount Splitter frame, install splitters.
  - Move Sequencer fibers from VRB to Splitter.
  - Install fibers from Splitter to VRB.

Conclusions

- Horseshoe
  - Changing ACs fairly easy but delicate.
  - Cooling may be difficult.
- Cathedral
  - Needs design work for smaller fusepanel.
  - Getting power cables into area is not trivial.
  - Wire extraction is VERY tough.
- Platform and MCH1
  - No problem.
- MCH2
  - Can be done before shutdown.