PART NO.	A8696-001	REV	ECO	DATE	APP
		3		04-11-03	

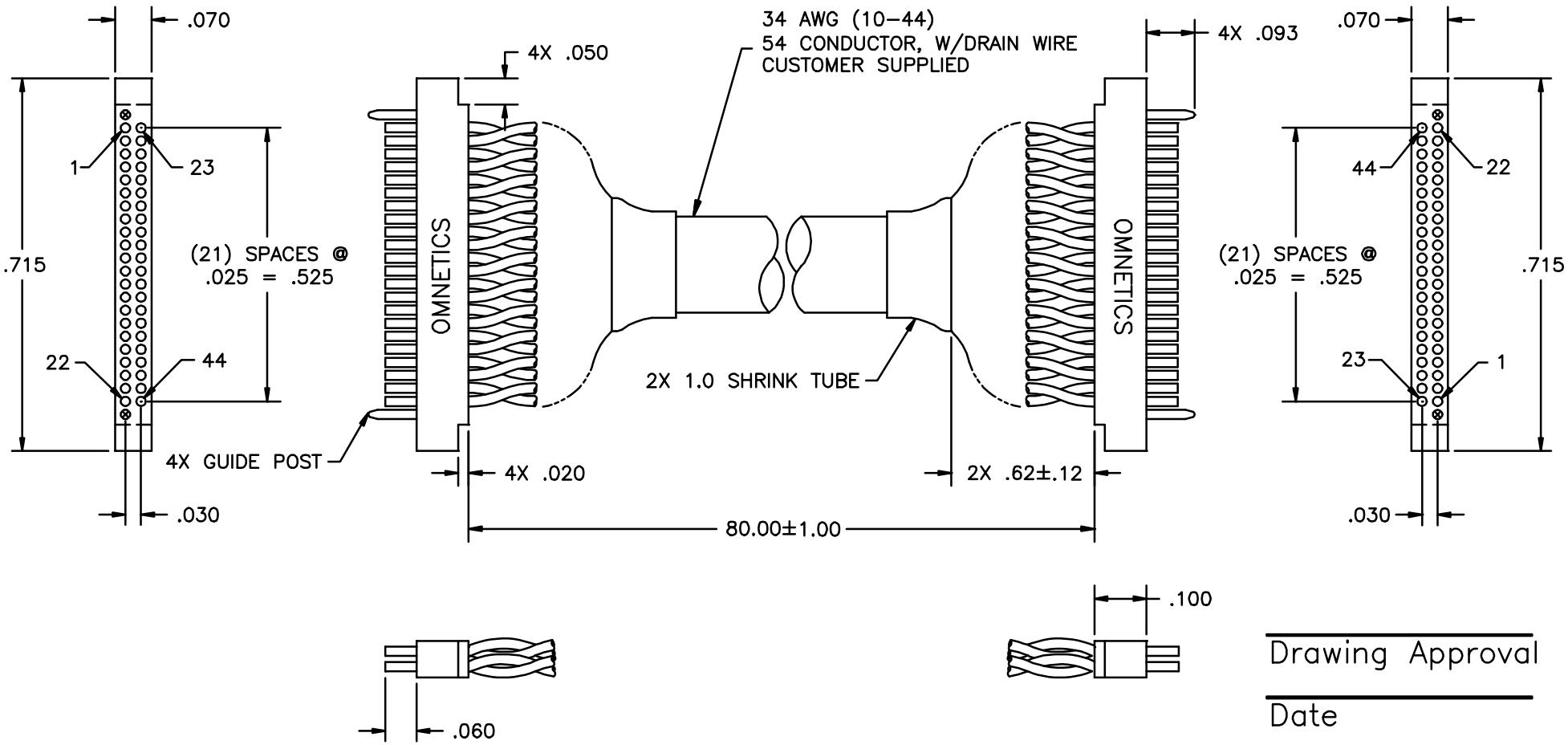

Drawing Approval

Date

NOTE: WIRE PIN 1 TO 1, 2 TO 2, 3 TO 3, ETC.

BACK POTTING TO COVER SOLDER JOINT

REF: FERMILAB

JUM	-TOLERANCES- UNLESS OTHERWISE NOTED DIMENSIONS IN INCHES 2 PL DEC ± .01 3 PL DEC ± .005 4 PL DEC ± .0005 ANGLES ±	OMNETICS CONNECTOR CORPORATION		CAGE CODE 61873
		DFTM. PER	DATE 03-31-03	TITLE: (44) SOCKET FEMALE DUAL ROW NANO JUMPER ASSEMBLY	DWG NO. A8696
		CHK'D.	DATE		SHEET 1 OF 2 / REV 3
		APP'D.	DATE		SCALE: 5:1