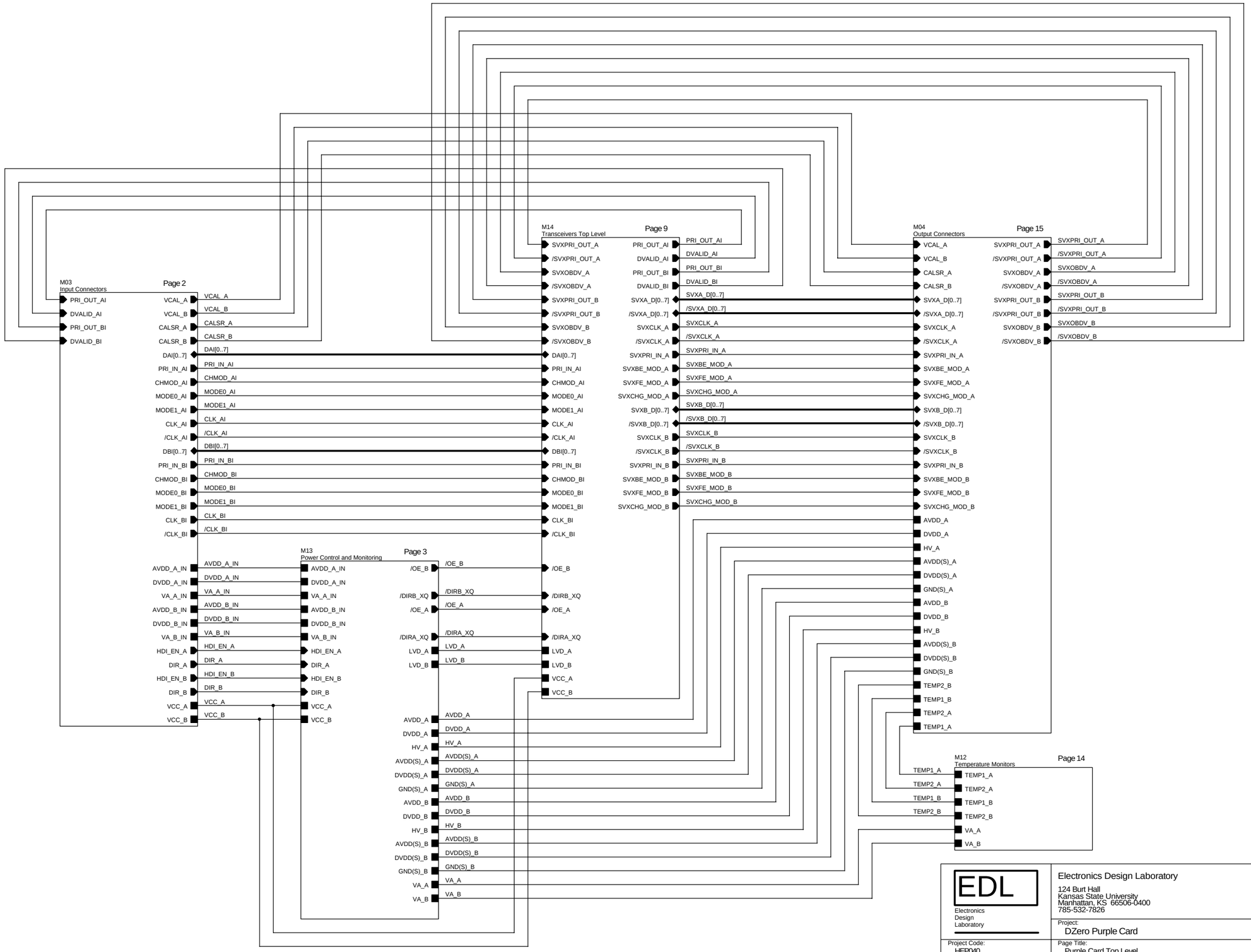

EDL
Electronics Design Laboratory

Electronics Design Laboratory
124 Burt Hall
Kansas State University
Manhattan, KS 66506-0400
785-532-7826

Project: DZero Purple Card

Project Code: HEP040

Page Title: Purple Card Top Level

Approvals:

Rev. 2.0

Size: C

Page Date: Tuesday, August 27, 2002

Design Date: Tuesday, August 27, 2002

CAGE Code: 4B817

Sheet 1 of 15

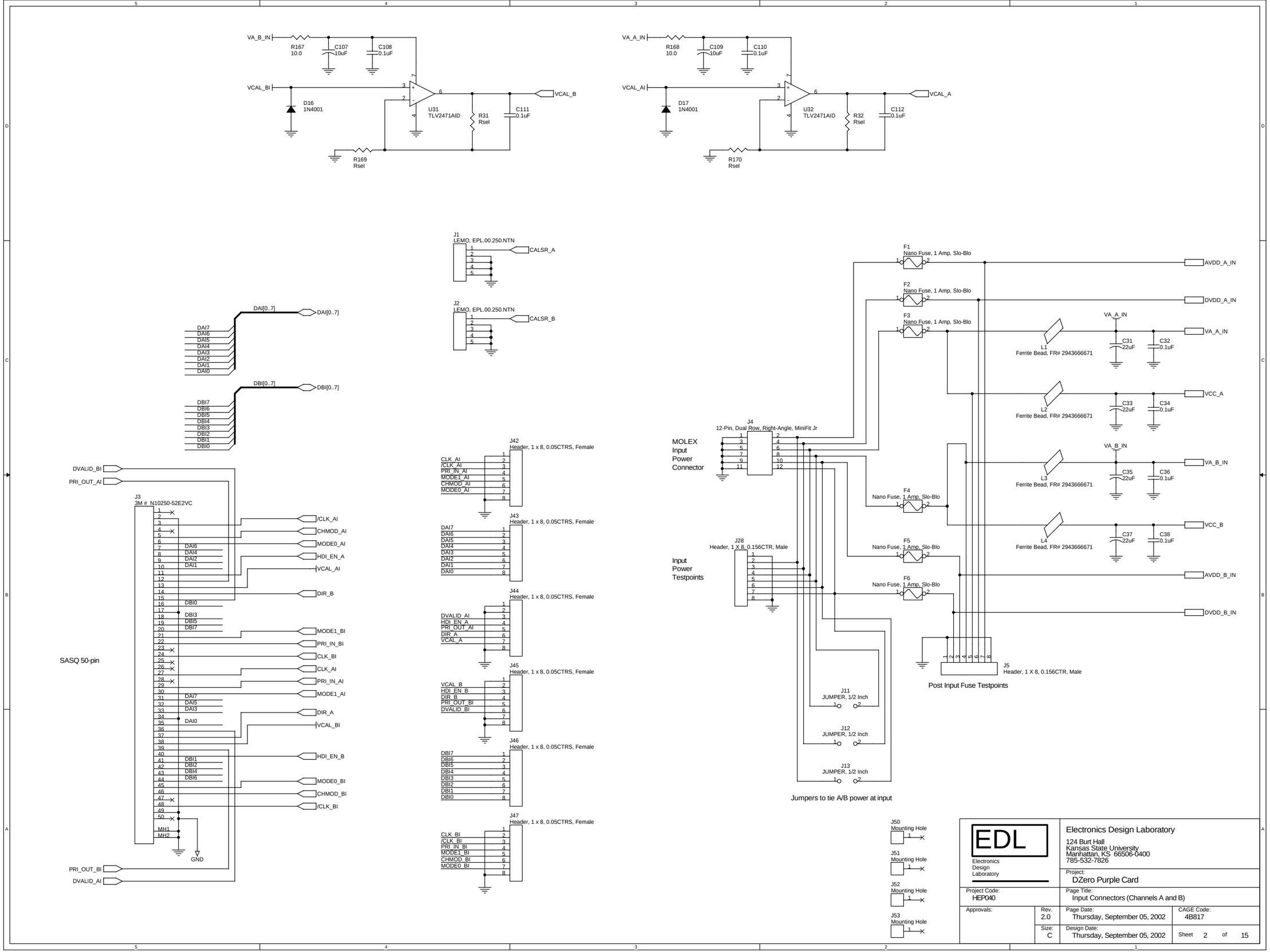
VA_B_IN
R167
10.0
C107
10uF
C108
0.1uF
VCAL_BI
D16
1N4001
U31
TLV2471AID
R31
Rsel
C111
0.1uF
VCAL_B
R169
Rsel
VA_A_IN
R168
10.0
C109
10uF
C110
0.1uF
VCAL_AI
D17
1N4001
U32
TLV2471AID
R32
Rsel
C112
0.1uF
VCAL_A
R170
Rsel
J1
LEMO, EPL.00.250.NTN
CALSR_A
J2
LEMO, EPL.00.250.NTN
CALSR_B
DAI[0..7]
DAI7
DAI6
DAI5
DAI4
DAI3
DAI2
DAI1
DAI0
DBI[0..7]
DBI7
DBI6
DBI5
DBI4
DBI3
DBI2
DBI1
DBI0
DVALID_BI
PRI_OUT_AI
J3
3M # N10250-52E2VC
SASQ 50-pin
/CLK_AI
CHMOD_AI
MODE0_AI
HDI_EN_A
VCAL_AI
DIR_B
MODE1_BI
PRI_IN_BI
CLK_BI
CLK_AI
PRI_IN_AI
MODE1_AI
DIR_A
VCAL_BI
HDI_EN_B
MODE0_BI
CHMOD_BI
/CLK_BI
MH1
MH2
GND
PRI_OUT_BI
DVALID_AI
J42
Header, 1 x 8, 0.05CTRS, Female
CLK_AI
/CLK_AI
PRI_IN_AI
MODE1_AI
CHMOD_AI
MODE0_AI
J43
Header, 1 x 8, 0.05CTRS, Female
J44
Header, 1 x 8, 0.05CTRS, Female
DVALID_AI
HDI_EN_A
PRI_OUT_AI
DIR_A
VCAL_A
J45
Header, 1 x 8, 0.05CTRS, Female
VCAL_B
HDI_EN_B
DIR_B
PRI_OUT_BI
DVALID_BI
J46
Header, 1 x 8, 0.05CTRS, Female
J47
Header, 1 x 8, 0.05CTRS, Female
CLK_BI
/CLK_BI
PRI_IN_BI
MODE1_BI
CHMOD_BI
MODE0_BI
F1
Nano Fuse, 1 Amp, Slo-Blo
F2
Nano Fuse, 1 Amp, Slo-Blo
F3
Nano Fuse, 1 Amp, Slo-Blo
F4
Nano Fuse, 1 Amp, Slo-Blo
F5
Nano Fuse, 1 Amp, Slo-Blo
F6
Nano Fuse, 1 Amp, Slo-Blo
AVDD_A_IN
DVDD_A_IN
VA_A_IN
L1
Ferrite Bead, FR# 2943666671
C31
22uF
C32
0.1uF
VCC_A
L2
Ferrite Bead, FR# 2943666671
C33
22uF
C34
0.1uF
VA_B_IN
L3
Ferrite Bead, FR# 2943666671
C35
22uF
C36
0.1uF
VCC_B
L4
Ferrite Bead, FR# 2943666671
C37
22uF
C38
0.1uF
AVDD_B_IN
DVDD_B_IN
J4
12-Pin, Dual Row, Right-Angle, MiniFit Jr
MOLEX
Input
Power
Connector
J28
Header, 1 X 8, 0.156CTR, Male
Input
Power
Testpoints
J5
Header, 1 X 8, 0.156CTR, Male
Post Input Fuse Testpoints
J11
JUMPER, 1/2 Inch
J12
JUMPER, 1/2 Inch
J13
JUMPER, 1/2 Inch
Jumpers to tie A/B power at input
J50
Mounting Hole
J51
Mounting Hole
J52
Mounting Hole
J53
Mounting Hole
EDL
Electronics
Design
Laboratory
Electronics Design Laboratory
124 Burt Hall
Kansas State University
Manhattan, KS 66506-0400
785-532-7826
Project:
DZero Purple Card
Project Code:
HEP040
Page Title:
Input Connectors (Channels A and B)
Approvals:
Rev.
2.0
Page Date:
Thursday, September 05, 2002
CAGE Code:
4B817
Size:
C
Design Date:
Thursday, September 05, 2002
Sheet 2 of 15

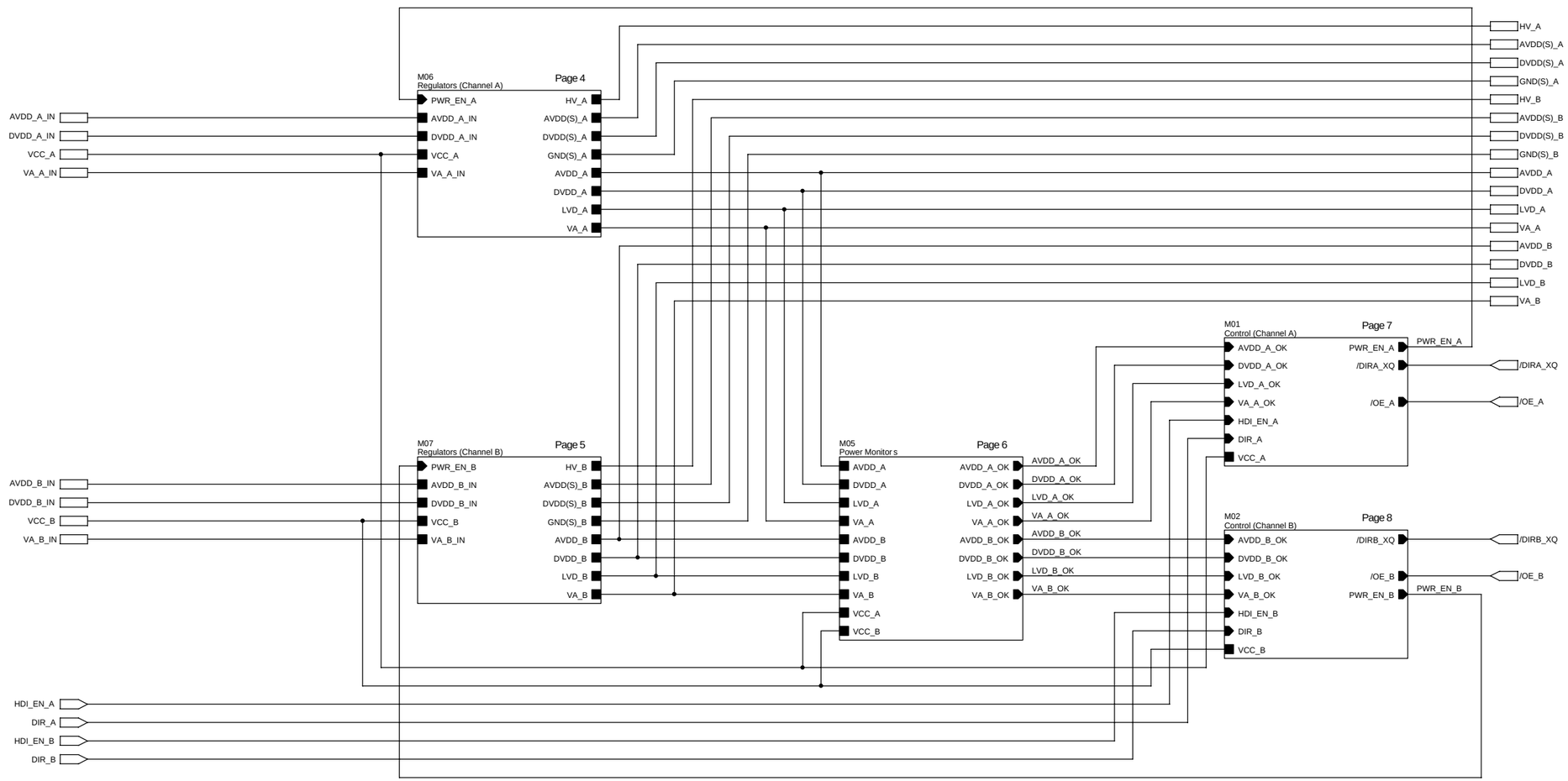

EDL
Electronics Design Laboratory

Electronics Design Laboratory
124 Burt Hall
Kansas State University
Manhattan, KS 66506-0400
785-532-7826

Project: DZero Purple Card

Project Code: HEP040

Page Title: Power, Control, and Monitoring Top Level

Approvals:

Rev. 2.0

Page Date: Tuesday, August 27, 2002

CAGE Code: 4B817

Size: C

Design Date: Tuesday, August 27, 2002

Sheet 3 of 15

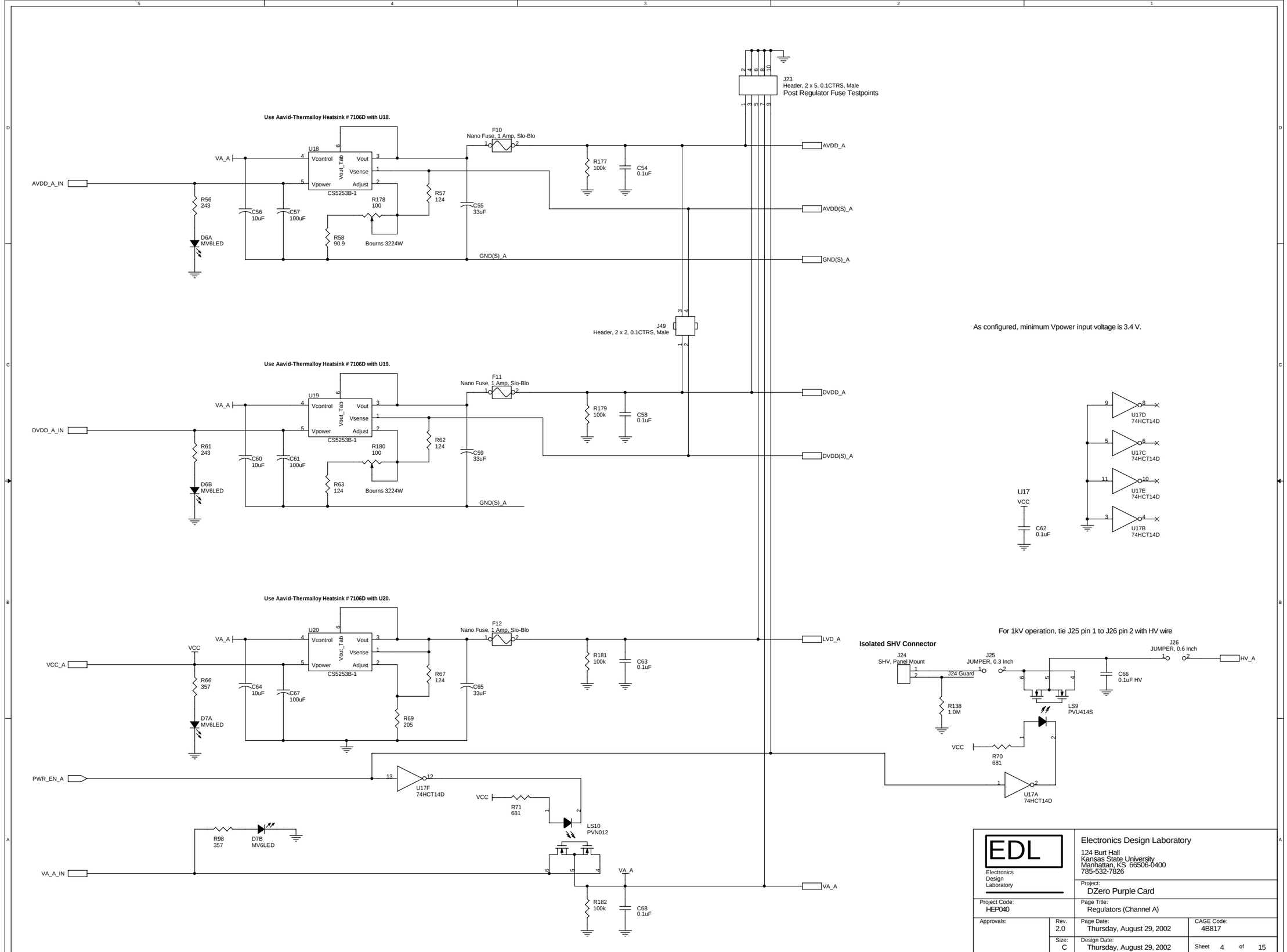
J23
Header, 2 x 5, 0.1CTRS, Male
Post Regulator Fuse Testpoints
Use Aavid-Thermalloy Heatsink # 7106D with U18.
U18
CS5253B-1
Vcontrol
Vout_Tab
Vout
Vsense
Vpower
Adjust
VA_A
AVDD_A_IN
F10
Nano Fuse, 1 Amp, Slo-Blo
R177
100k
C54
0.1uF
R56
243
C56
10uF
C57
100uF
R178
100
R57
124
C55
33uF
R58
90.9
Bourns 3224W
D6A
MV6LED
GND(S)_A
AVDD_A
AVDD(S)_A
GND(S)_A
J49
Header, 2 x 2, 0.1CTRS, Male
As configured, minimum Vpower input voltage is 3.4 V.
Use Aavid-Thermalloy Heatsink # 7106D with U19.
U19
DVDD_A_IN
F11
Nano Fuse, 1 Amp, Slo-Blo
R179
100k
C58
0.1uF
R61
243
C60
10uF
C61
100uF
R180
100
R62
124
C59
33uF
R63
124
D6B
MV6LED
DVDD_A
DVDD(S)_A
U17
VCC
C62
0.1uF
U17D
74HCT14D
U17C
74HCT14D
U17E
74HCT14D
U17B
74HCT14D
Use Aavid-Thermalloy Heatsink # 7106D with U20.
U20
VCC_A
F12
Nano Fuse, 1 Amp, Slo-Blo
R181
100k
C63
0.1uF
R66
357
C64
10uF
C67
100uF
R67
124
C65
33uF
R69
205
D7A
MV6LED
LVD_A
Isolated SHV Connector
For 1kV operation, tie J25 pin 1 to J26 pin 2 with HV wire
J24
SHV, Panel Mount
J24 Guard
J25
JUMPER, 0.3 Inch
J26
JUMPER, 0.6 Inch
HV_A
C66
0.1uF HV
R138
1.0M
LS9
PVU414S
R70
681
U17A
74HCT14D
PWR_EN_A
U17F
74HCT14D
R71
681
LS10
PVN012
R98
357
D7B
MV6LED
VA_A_IN
R182
100k
C68
0.1uF
VA_A
EDL
Electronics Design Laboratory
124 Burt Hall
Kansas State University
Manhattan, KS 66506-0400
785-532-7826
Project:
DZero Purple Card
Project Code:
HEP040
Page Title:
Regulators (Channel A)
Approvals:
Rev.
2.0
Page Date:
Thursday, August 29, 2002
CAGE Code:
4B817
Size:
C
Design Date:
Thursday, August 29, 2002
Sheet 4 of 15

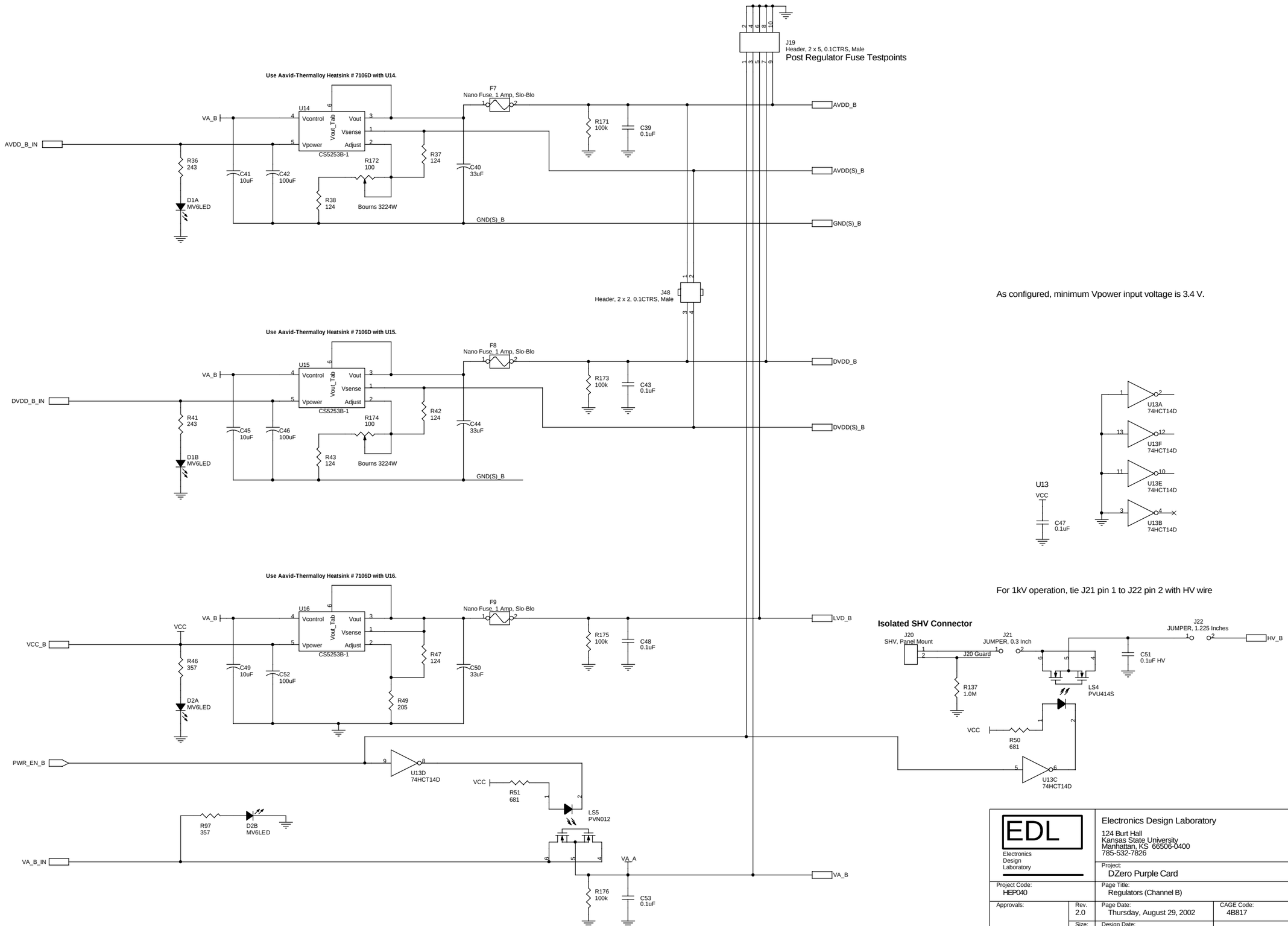
J19
Header, 2 x 5, 0.1CTRS, Male
Post Regulator Fuse Testpoints
Use Aavid-Thermalloy Heatsink # 7106D with U14.
U14
CS5253B-1
Vcontrol
Vout_Tab
Vout
Vsense
Vpower
Adjust
F7
Nano Fuse, 1 Amp, Slo-Blo
VA_B
AVDD_B_IN
R36
243
D1A
MV6LED
C41
10uF
C42
100uF
R38
124
R172
100
Bourns 3224W
R37
124
C40
33uF
R171
100k
C39
0.1uF
AVDD_B
AVDD(S)_B
GND(S)_B
J48
Header, 2 x 2, 0.1CTRS, Male
As configured, minimum Vpower input voltage is 3.4 V.
Use Aavid-Thermalloy Heatsink # 7106D with U15.
U15
F8
Nano Fuse, 1 Amp, Slo-Blo
DVDD_B_IN
R41
243
D1B
MV6LED
C45
10uF
C46
100uF
R43
124
R174
100
R42
124
C44
33uF
R173
100k
C43
0.1uF
DVDD_B
DVDD(S)_B
U13
VCC
C47
0.1uF
U13A
74HCT14D
U13F
74HCT14D
U13E
74HCT14D
U13B
74HCT14D
Use Aavid-Thermalloy Heatsink # 7106D with U16.
U16
F9
Nano Fuse, 1 Amp, Slo-Blo
VCC_B
R46
357
D2A
MV6LED
C49
10uF
C52
100uF
R49
205
R47
124
C50
33uF
R175
100k
C48
0.1uF
LVD_B
For 1kV operation, tie J21 pin 1 to J22 pin 2 with HV wire
Isolated SHV Connector
J20
SHV, Panel Mount
J20 Guard
J21
JUMPER, 0.3 Inch
J22
JUMPER, 1.225 Inches
HV_B
C51
0.1uF HV
R137
1.0M
LS4
PVU414S
R50
681
U13C
74HCT14D
PWR_EN_B
U13D
74HCT14D
R51
681
LS5
PVN012
R97
357
D2B
MV6LED
VA_B_IN
VA_A
R176
100k
C53
0.1uF
VA_B
EDL
Electronics Design Laboratory
Electronics Design Laboratory
124 Burt Hall
Kansas State University
Manhattan, KS 66506-0400
785-532-7826
Project:
DZero Purple Card
Project Code:
HEP040
Page Title:
Regulators (Channel B)
Approvals:
Rev.
2.0
Page Date:
Thursday, August 29, 2002
CAGE Code:
4B817
Size:
C
Design Date:
Thursday, August 29, 2002
Sheet 5 of 15

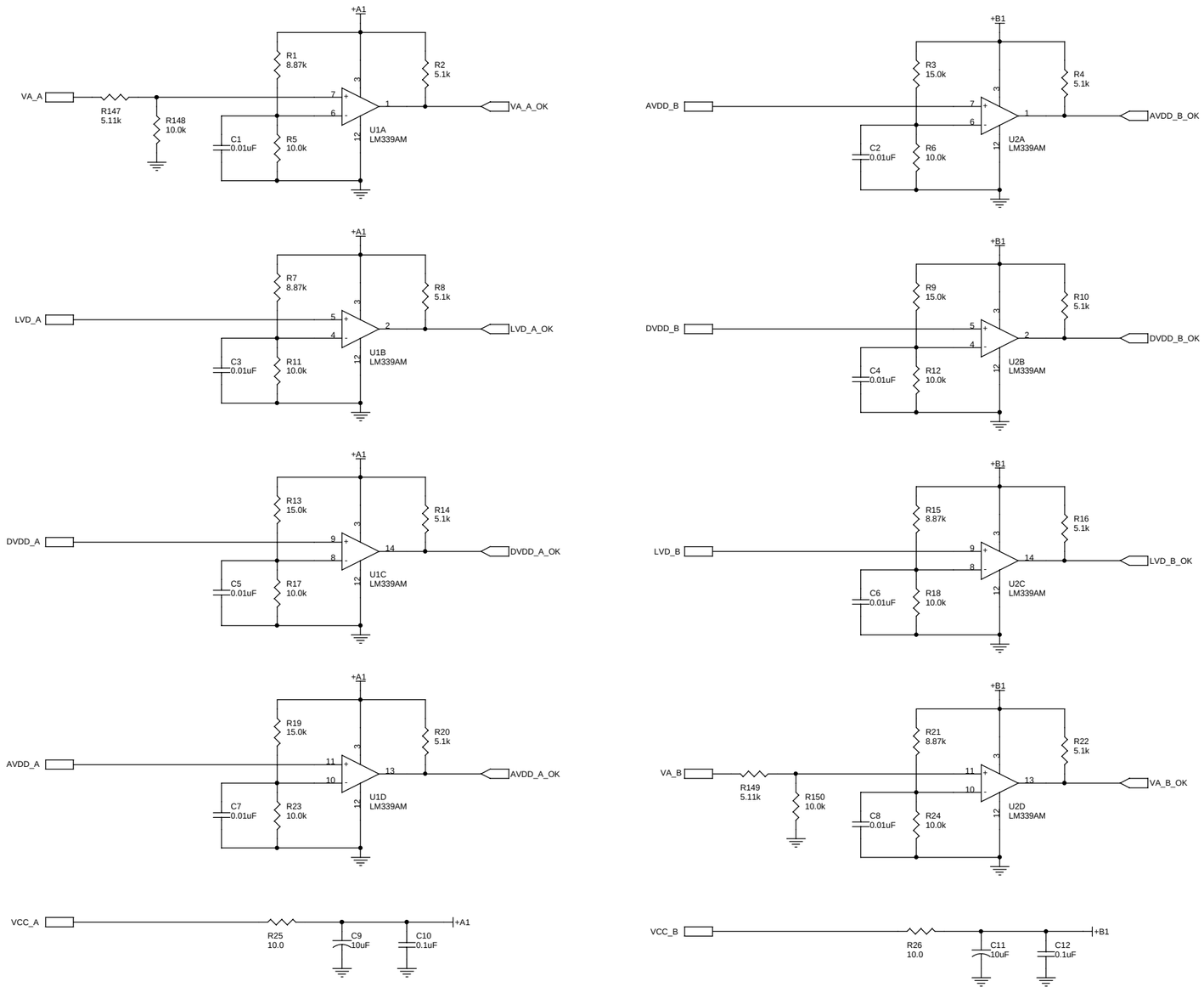

Circuits only check for nominal voltage 80% of desired

EDL Electronics Design Laboratory		Electronics Design Laboratory 124 Burt Hall Kansas State University Manhattan, KS 66506-0400 785-532-7826	
		Project: DZero Purple Card	
Project Code: HEP040		Page Title: Power Monitors (Channels A and B)	
Approvals:	Rev. 2.0	Page Date: Friday, August 30, 2002	CAGE Code: 4B817
	Size: C	Design Date: Friday, August 30, 2002	Sheet 6 of 15

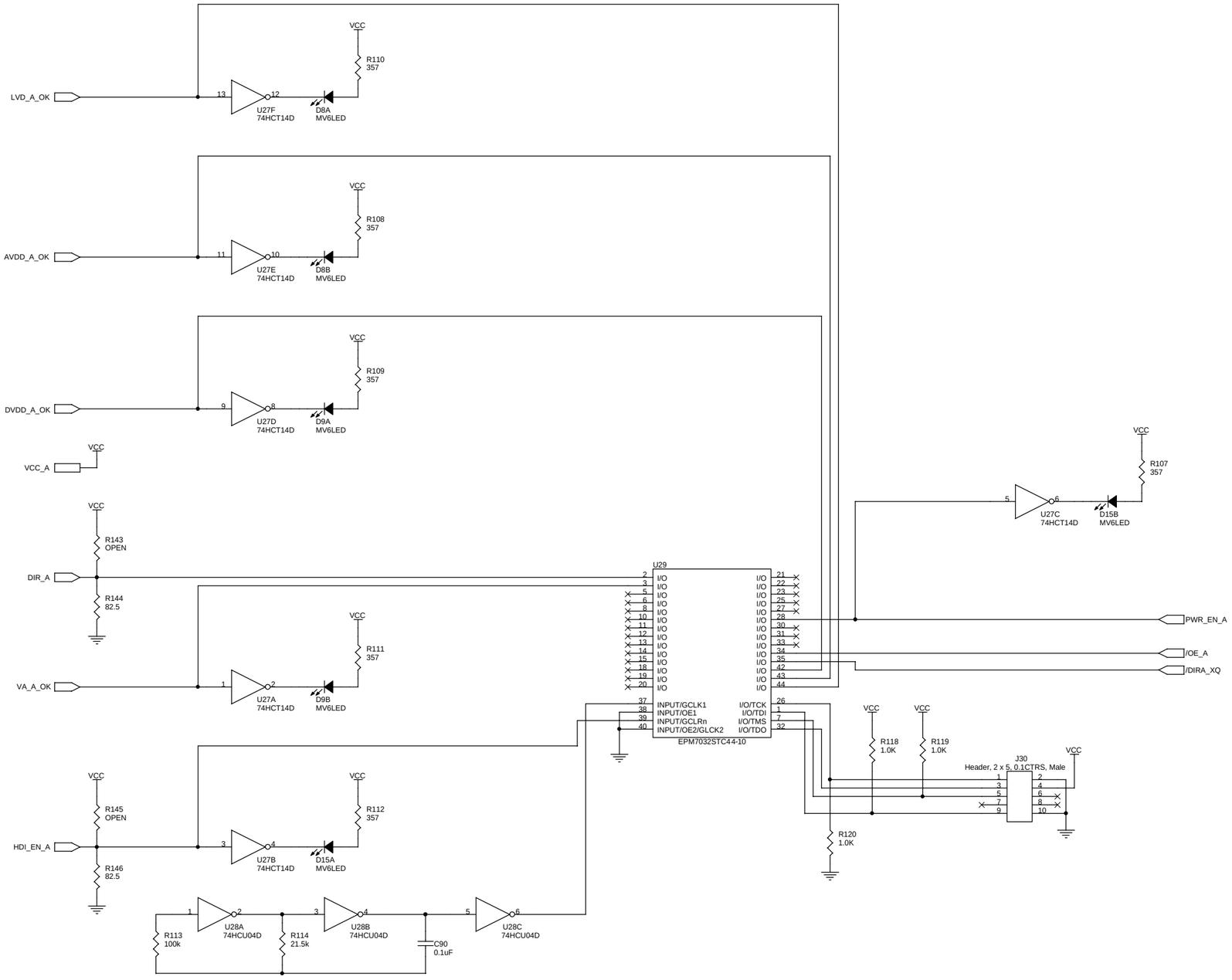

Nominal Frequency 200 Hz

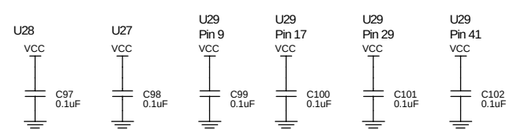

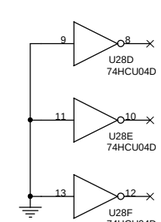

EDL Electronics Design Laboratory		Electronics Design Laboratory 124 Burt Hall Kansas State University Manhattan, KS 66506-0400 785-532-7826	
		Project: DZero Purple Card	
Project Code: HEP040		Page Title: Control (Channel A)	
Approvals:	Rev. 2.0	Page Date: Friday, August 30, 2002	CAGE Code: 4B817
	Size: C	Design Date: Friday, August 30, 2002	Sheet 7 of 15

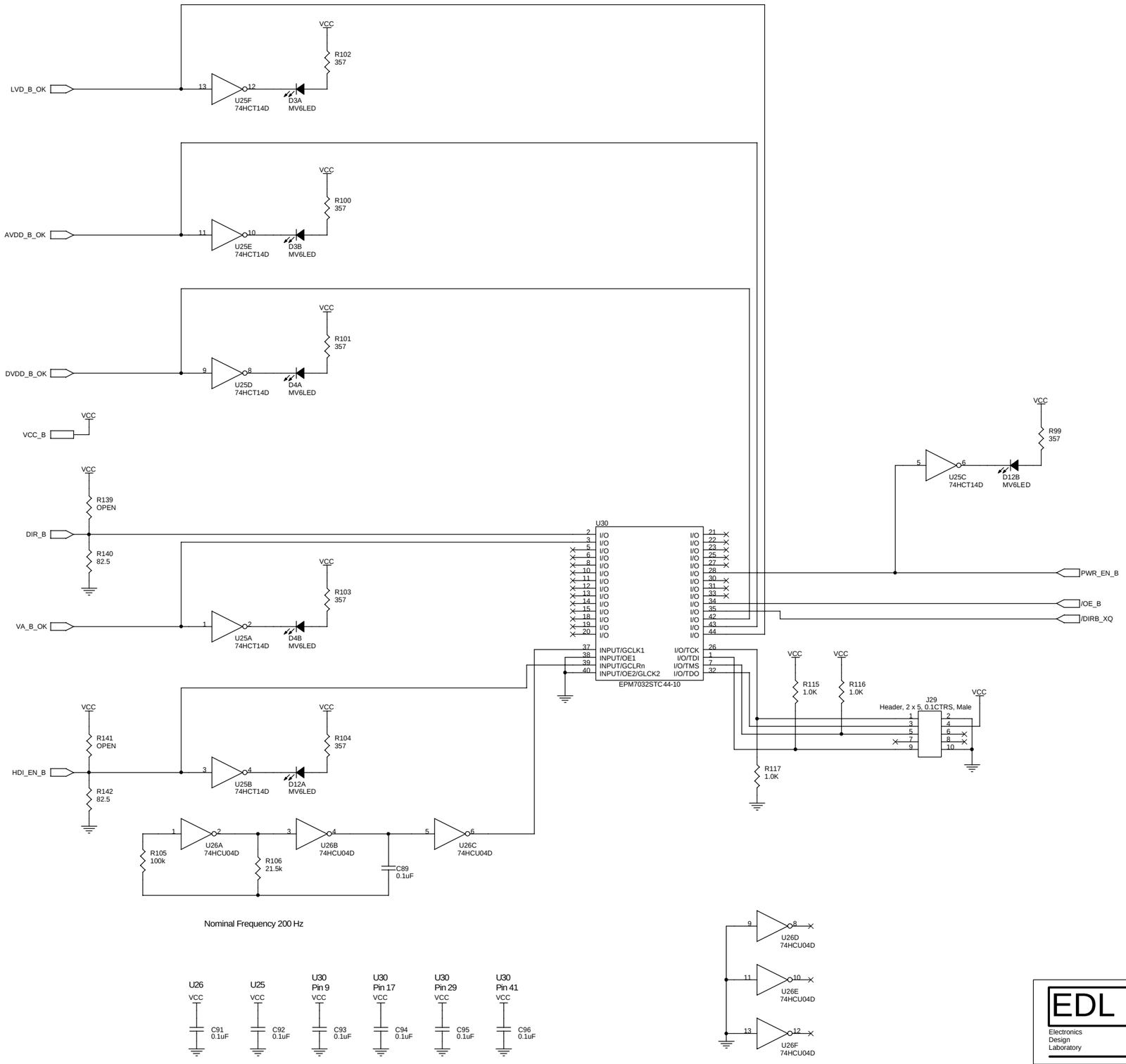

EDL
Electronics
Design
Laboratory

Electronics Design Laboratory
124 Burt Hall
Kansas State University
Manhattan, KS 66506-0400
785-532-7826

Project Code: HEP040		Project: DZero Purple Card	
		Page Title: Control (Channel B)	
Approvals:	Rev. 2.0	Page Date: Friday, August 30, 2002	CAGE Code: 4B817
	Size: C	Design Date: Friday, August 30, 2002	Sheet 8 of 15

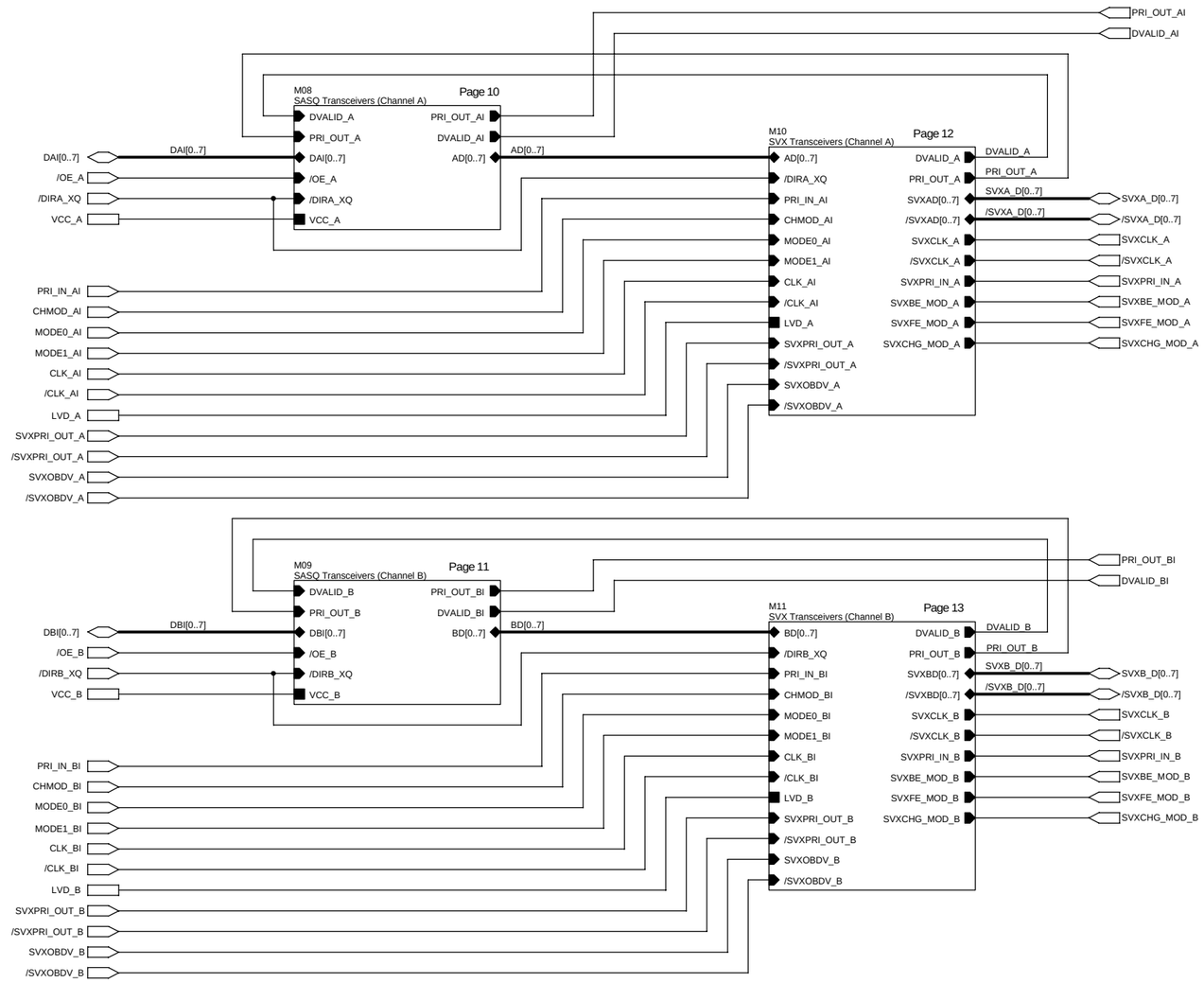

EDL Electronics Design Laboratory	Electronics Design Laboratory 124 Burt Hall Kansas State University Manhattan, KS 66506-0400 785-532-7826		
	Project: DZero Purple Card		
Project Code: HEP040	Page Title: Transceivers Top Level		
Approvals:	Rev. 2.0	Page Date: Wednesday, August 28, 2002	CAGE Code: 4B817
	Size: C	Design Date: Wednesday, August 28, 2002	Sheet 9 of 15

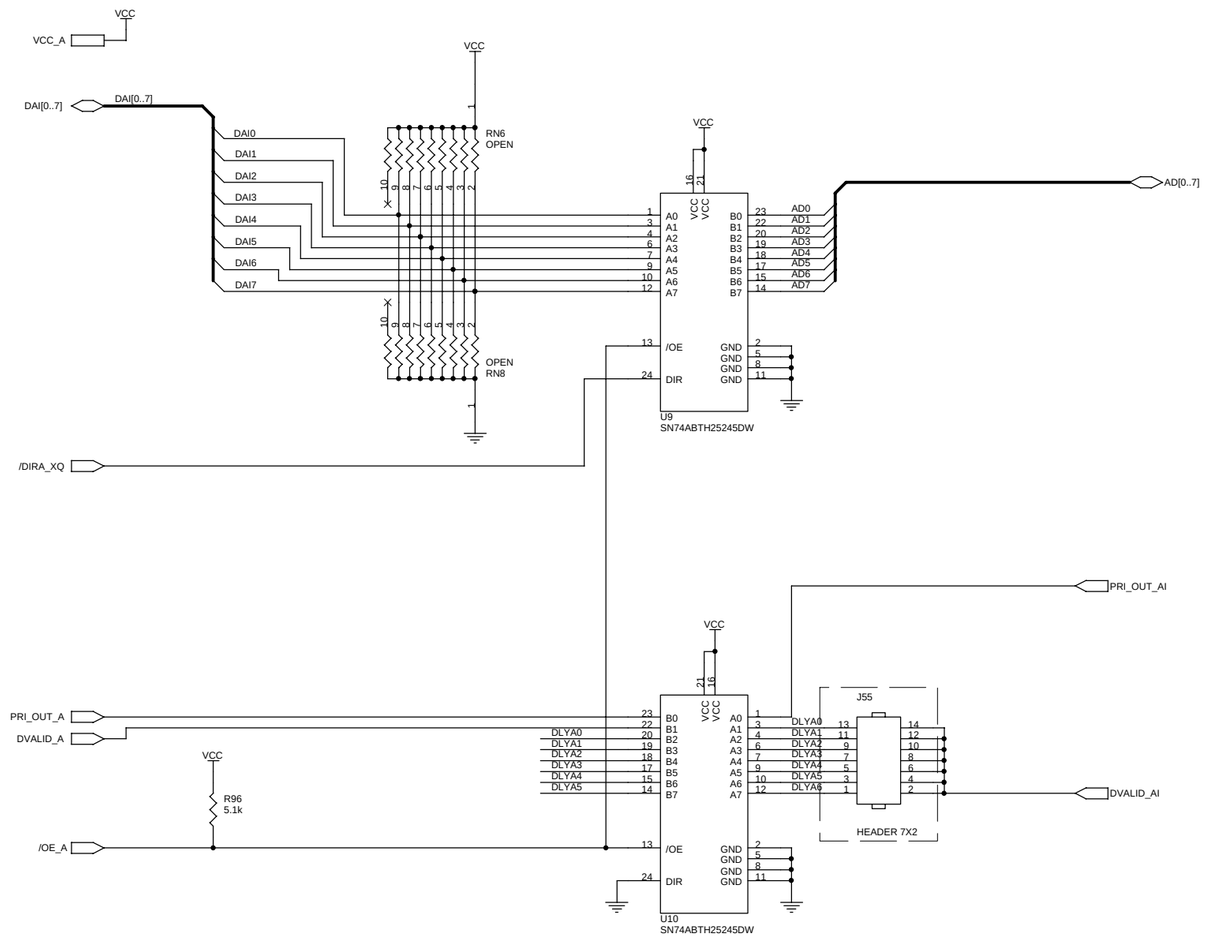

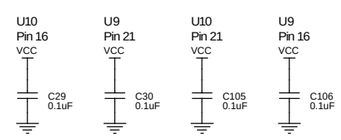

EDL Electronics Design Laboratory		Electronics Design Laboratory 124 Burt Hall Kansas State University Manhattan, KS 66506-0400 785-532-7826	
		Project: DZero Purple Card	
Project Code: HEP040		Page Title: SASQ Transceivers (Channel A)	
Approvals:	Rev. 2.0	Page Date: Thursday, September 05, 2002	CAGE Code: 4B817
	Size: C	Design Date: Thursday, September 05, 2002	Sheet 10 of 15

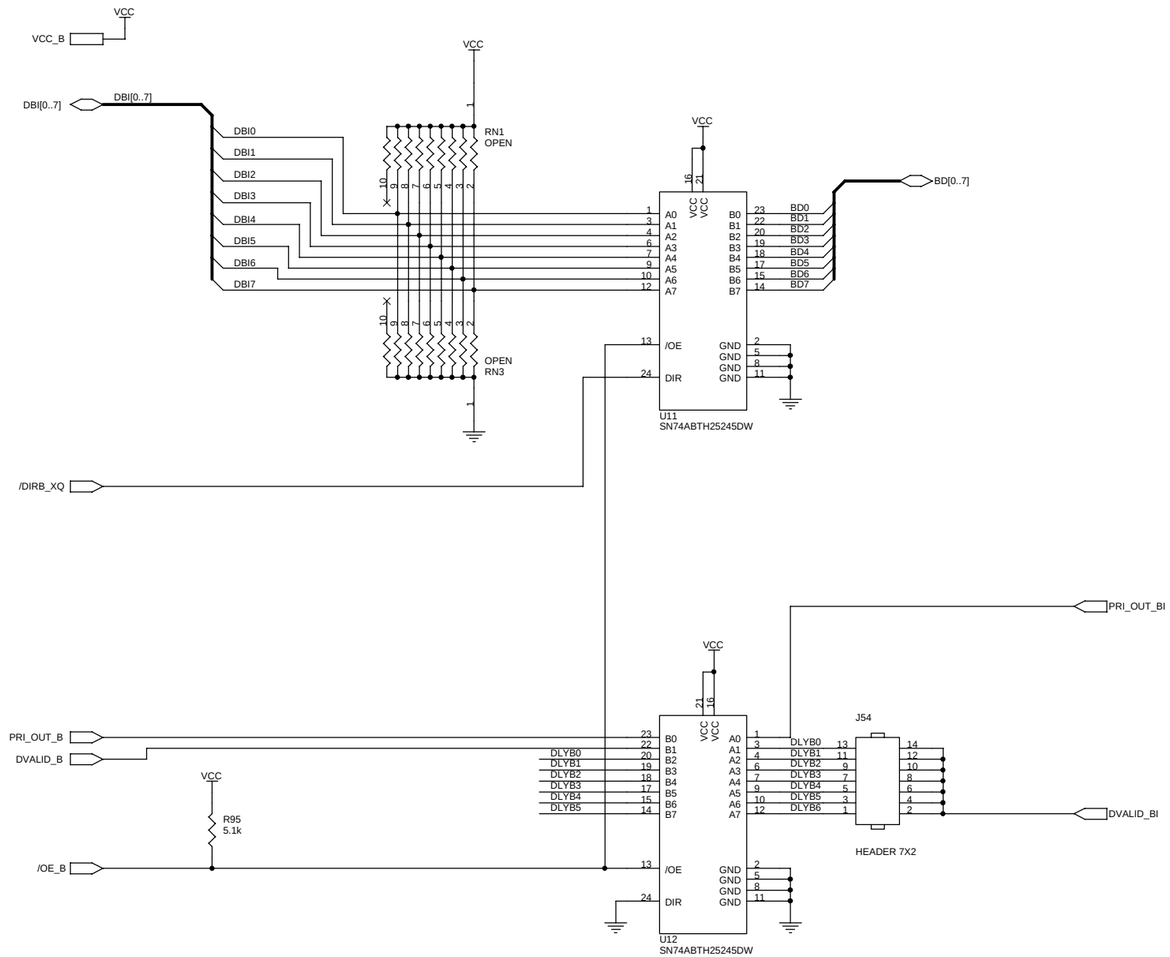

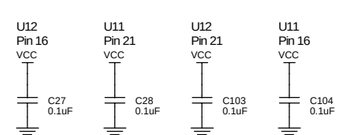

EDL
Electronics Design Laboratory

Electronics Design Laboratory
124 Burt Hall
Kansas State University
Manhattan, KS 66506-0400
785-532-7826

Project: DZero Purple Card

Project Code: HEP040

Page Title: SASQ Transceivers (Channel B)

Approvals:

Rev. 2.0

Page Date: Thursday, September 05, 2002

CAGE Code: 4B817

Size: C

Design Date: Thursday, September 05, 2002

Sheet 11 of 15

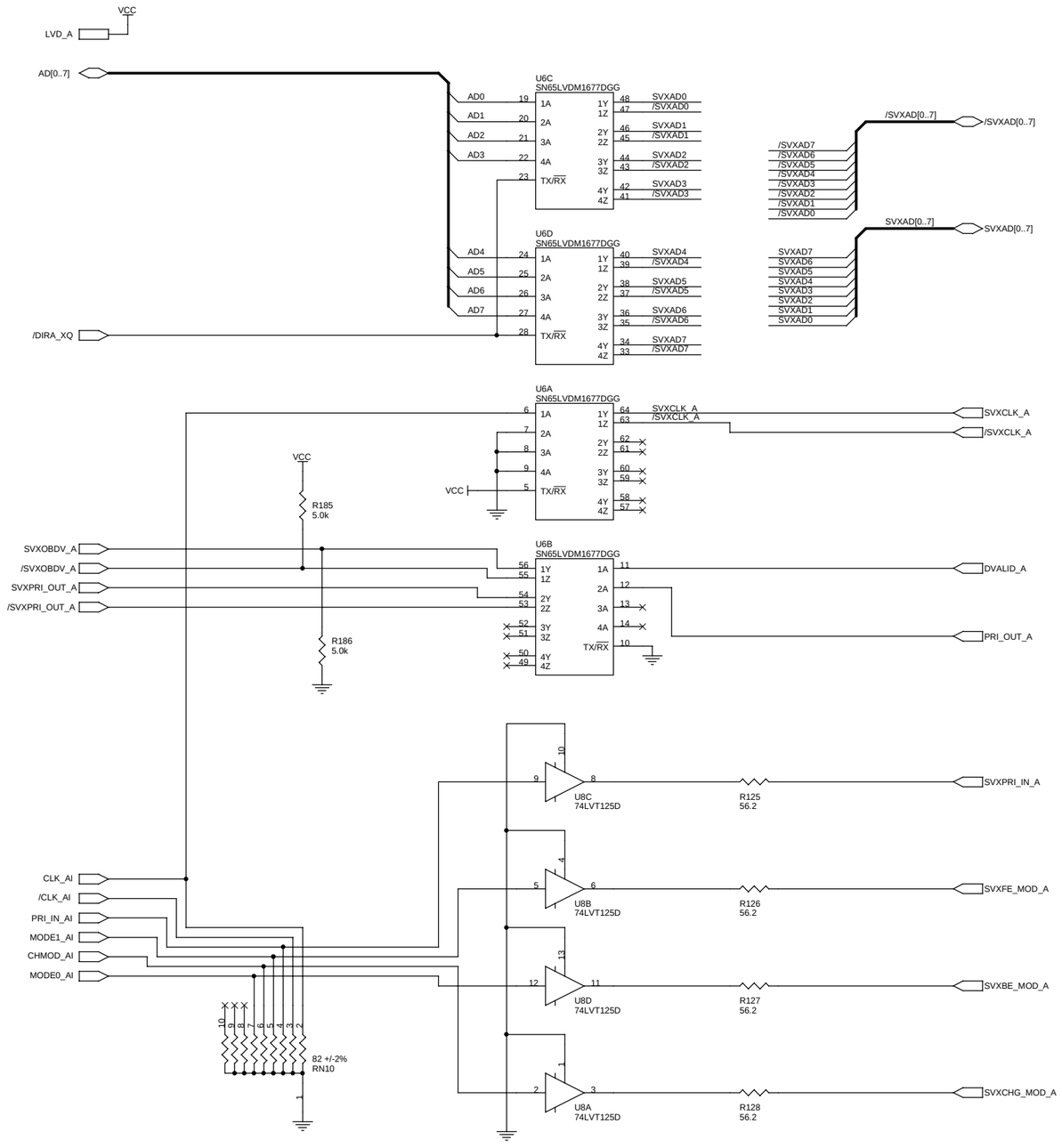

EDL
Electronics Design Laboratory

Electronics Design Laboratory
124 Burt Hall
Kansas State University
Manhattan, KS 66506-0400
785-532-7826

Project: DZero Purple Card

Project Code: HEP040

Page Title: SVX Transceivers (Channel A)

Approvals:

Rev. 2.0

Page Date: Tuesday, September 03, 2002

CAGE Code: 4B817

Size: C

Design Date: Tuesday, September 03, 2002

Sheet 12 of 15

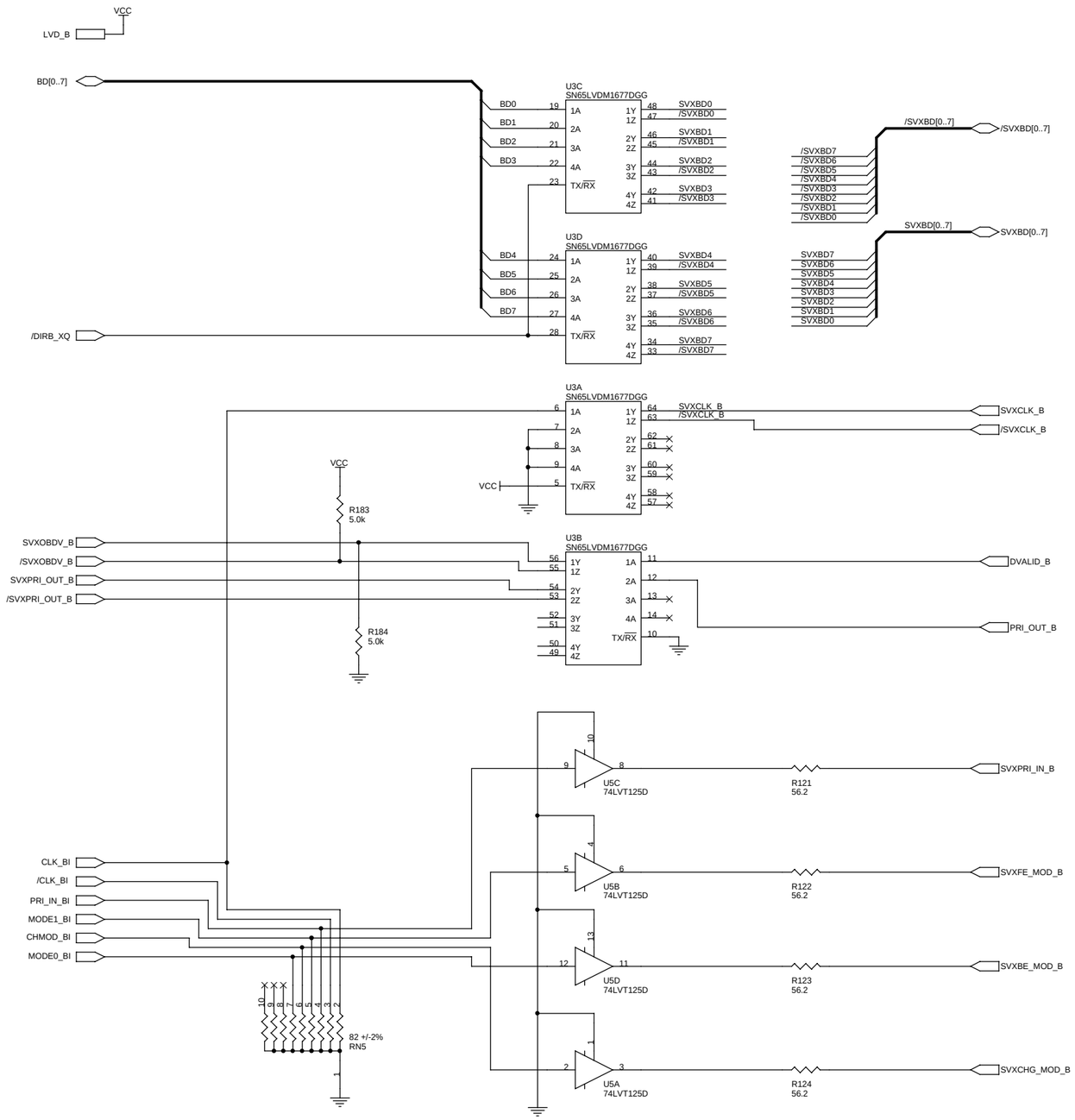

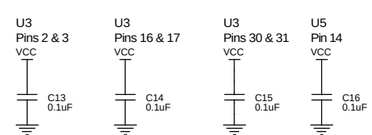

EDL
Electronics Design Laboratory

Electronics Design Laboratory
124 Burt Hall
Kansas State University
Manhattan, KS 66506-0400
785-532-7826

Project: DZero Purple Card

Project Code: HEP040

Page Title: SVX Transceivers (Channel B)

Approvals:

Rev. 2.0

Page Date: Tuesday, September 03, 2002

CAGE Code: 4B817

Size: C

Design Date: Tuesday, September 03, 2002

Sheet 13 of 15

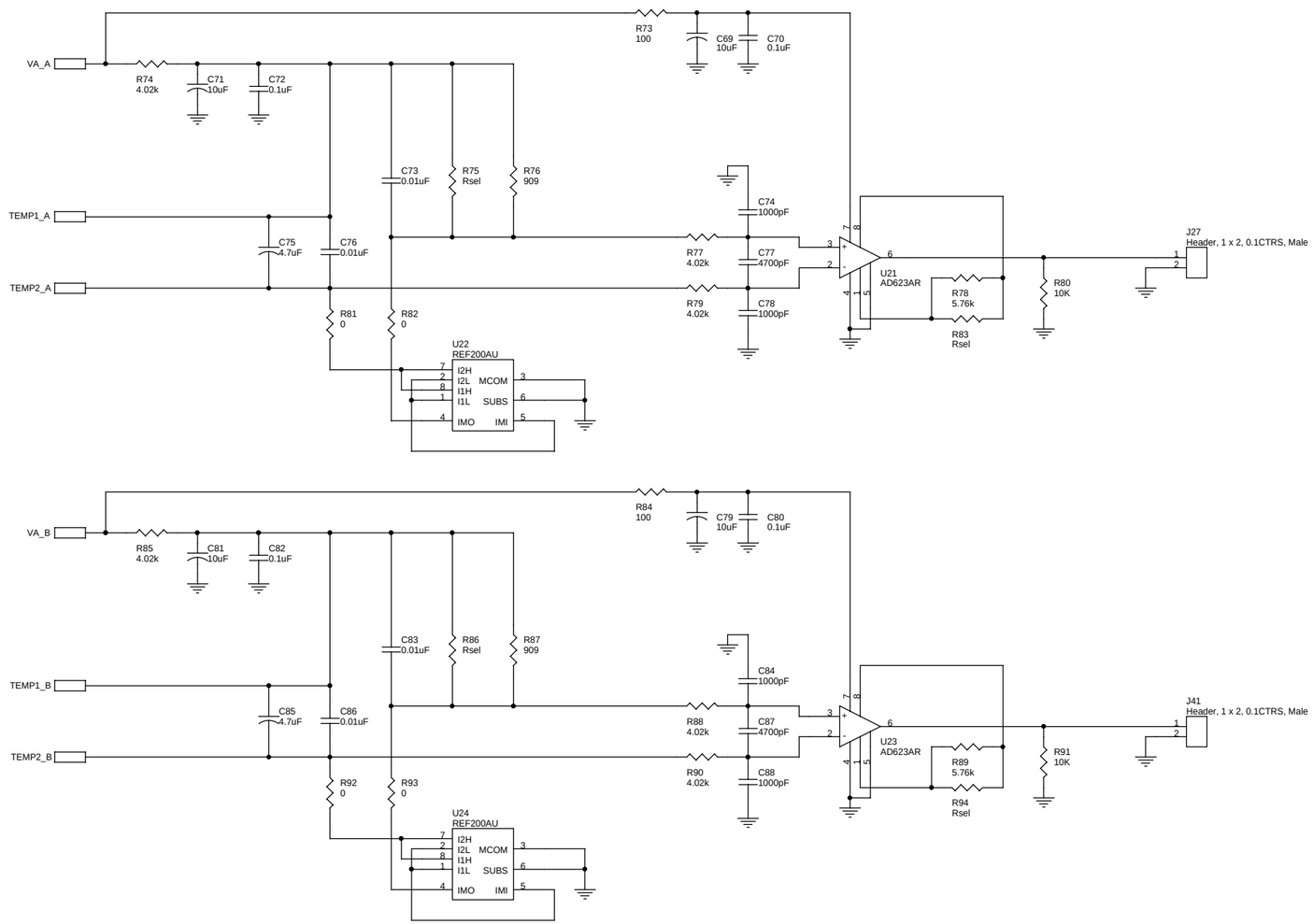

EDL
Electronics Design Laboratory

Electronics Design Laboratory
124 Burt Hall
Kansas State University
Manhattan, KS 66506-0400
785-532-7826

Project: DZero Purple Card

Project Code: HEP040

Page Title: Temperature Monitors (Channels A and B)

Approvals:

Rev. 2.0

Size: C

Page Date: Tuesday, August 27, 2002

Design Date: Tuesday, August 27, 2002

CAGE Code: 4B817

Sheet 14 of 15

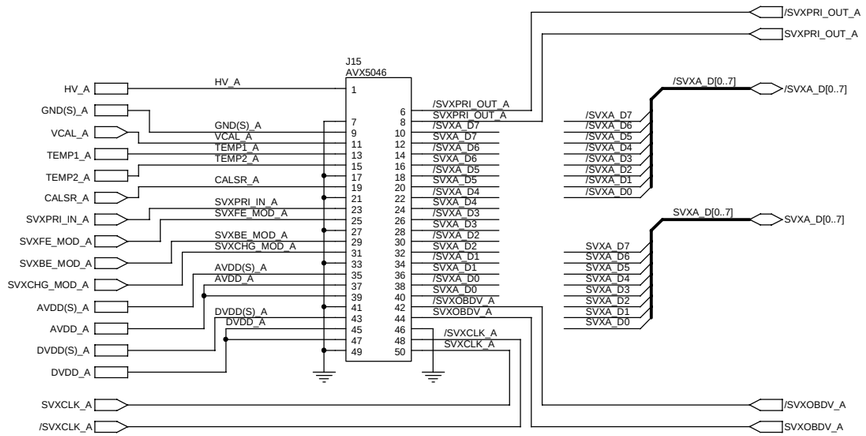

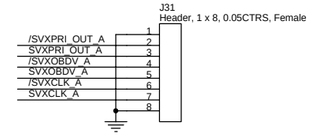

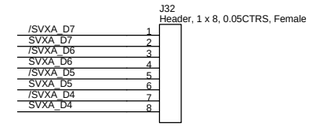

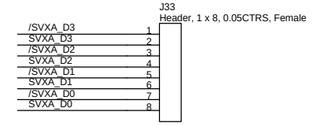

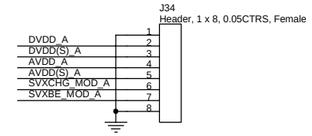

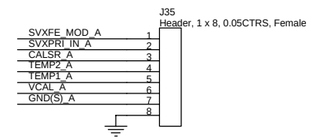

J35 pins 7 and 8 must be connected if testing regulators when SVX is not connected.

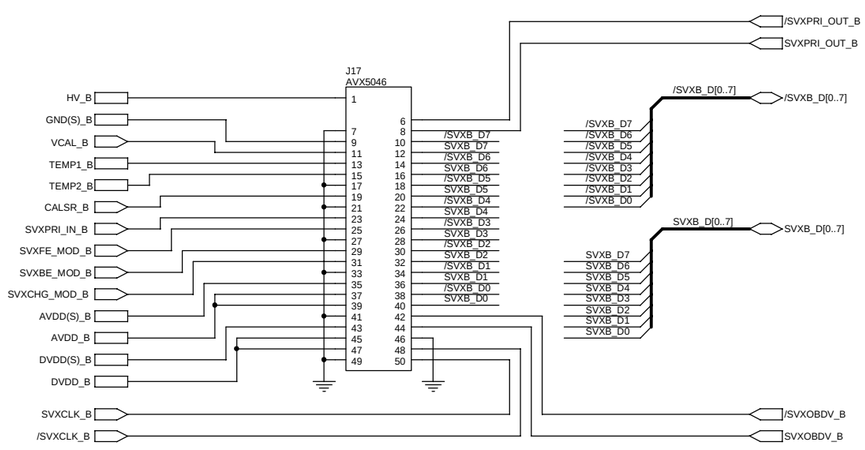

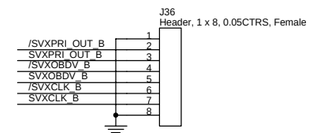

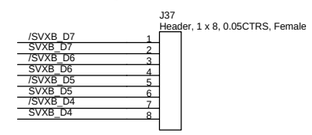

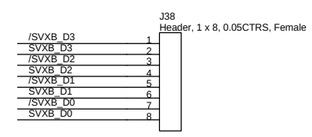

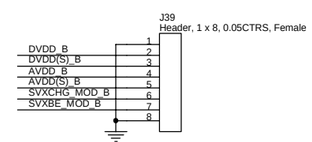

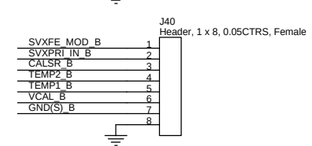

J40 pins 7 and 8 must be connected if testing regulators when SVX is not connected.

EDL
Electronics Design Laboratory

Electronics Design Laboratory
124 Burt Hall
Kansas State University
Manhattan, KS 66506-0400
785-532-7826

Project: DZero Purple Card			
Project Code: HEP040		Page Title: Output Connectors (Channels A and B)	
Approvals:	Rev. 2.0	Page Date: Tuesday, August 27, 2002	CAGE Code: 4B817
	Size: C	Design Date: Tuesday, August 27, 2002	Sheet 15 of 15