DZero Update

- I spent the last three weeks of August at LBL/UC Davis using their SVX4 testing setup and helping/consulting on the SEU radiation test.
- My top priority right now is writing a description of the stimulus test stand and the results that we have obtained for the TDR.

Pedestal Bowing and Pipeline Slope

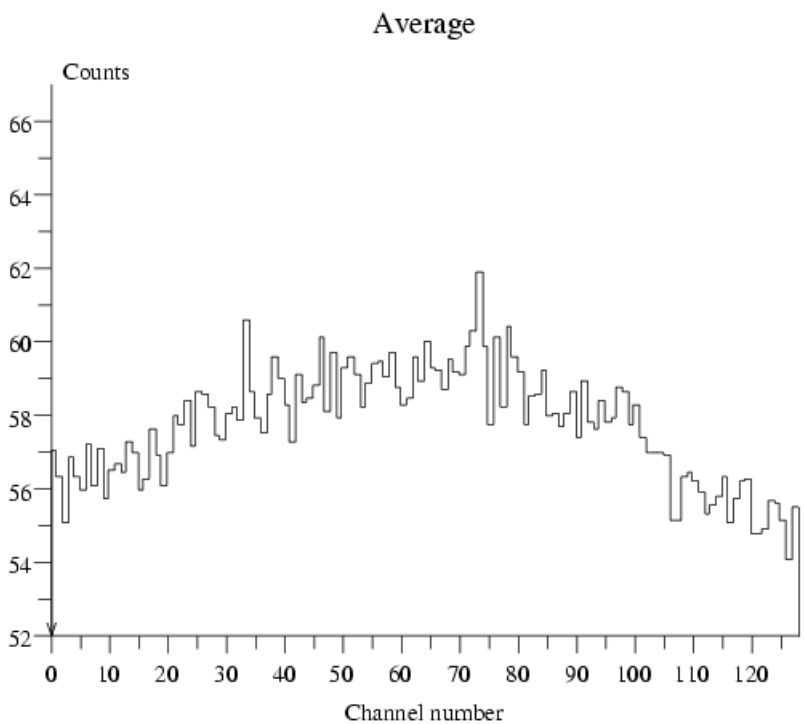

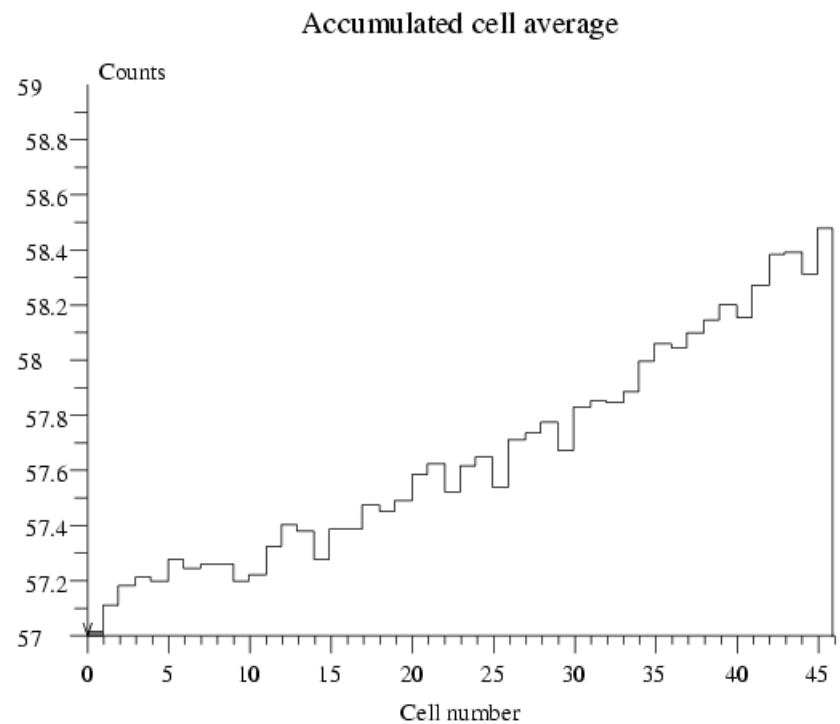

Qualitative Effects of Timing

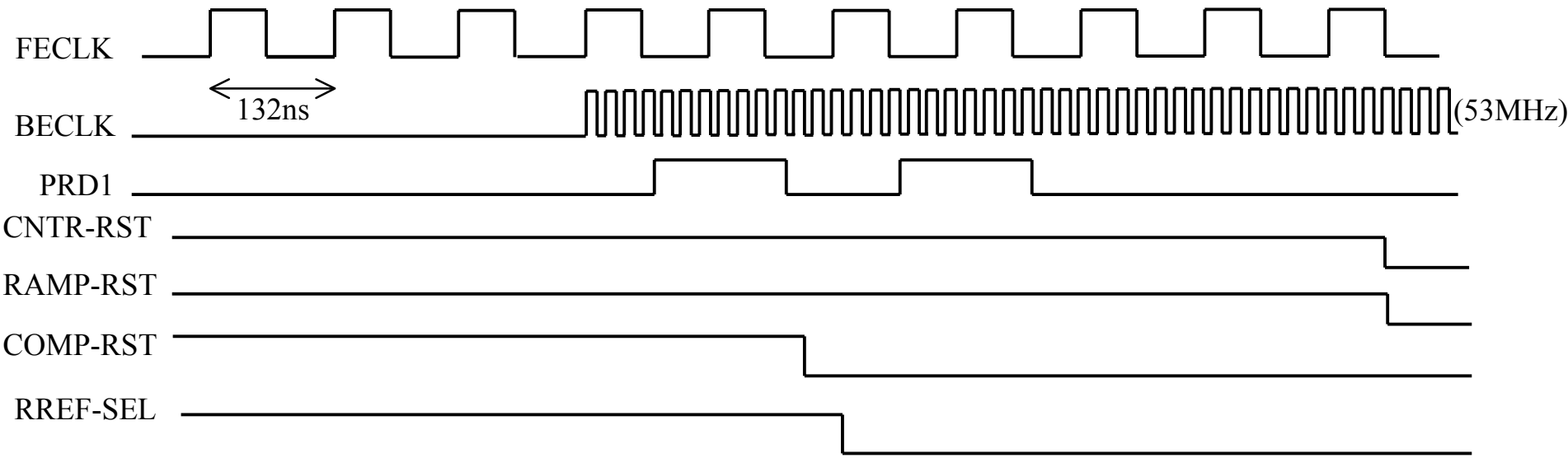

Moving COMP-RST relative to RAMP-RST we alter the right-hand side of the pedestal bowing to make it flatter. Moving RAMP_RST relative to COMP-RST & RAMP-RST makes the left-hand side flatter. We presently have no explanation. Cannot conclude that it is not a dynamic effect.

Pedestal Bowing (RP=9)

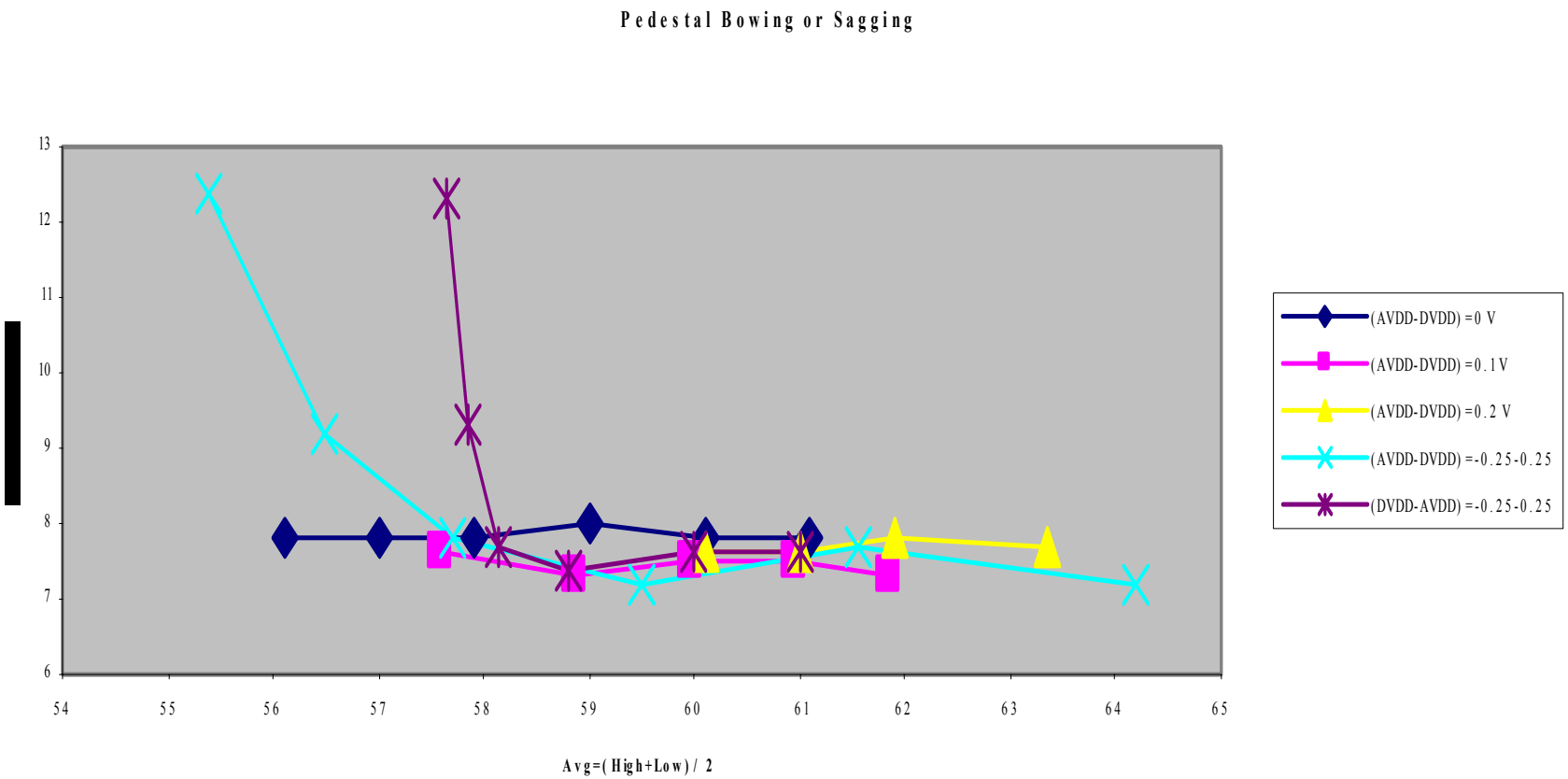

Pedestal Bowing (RP=5)

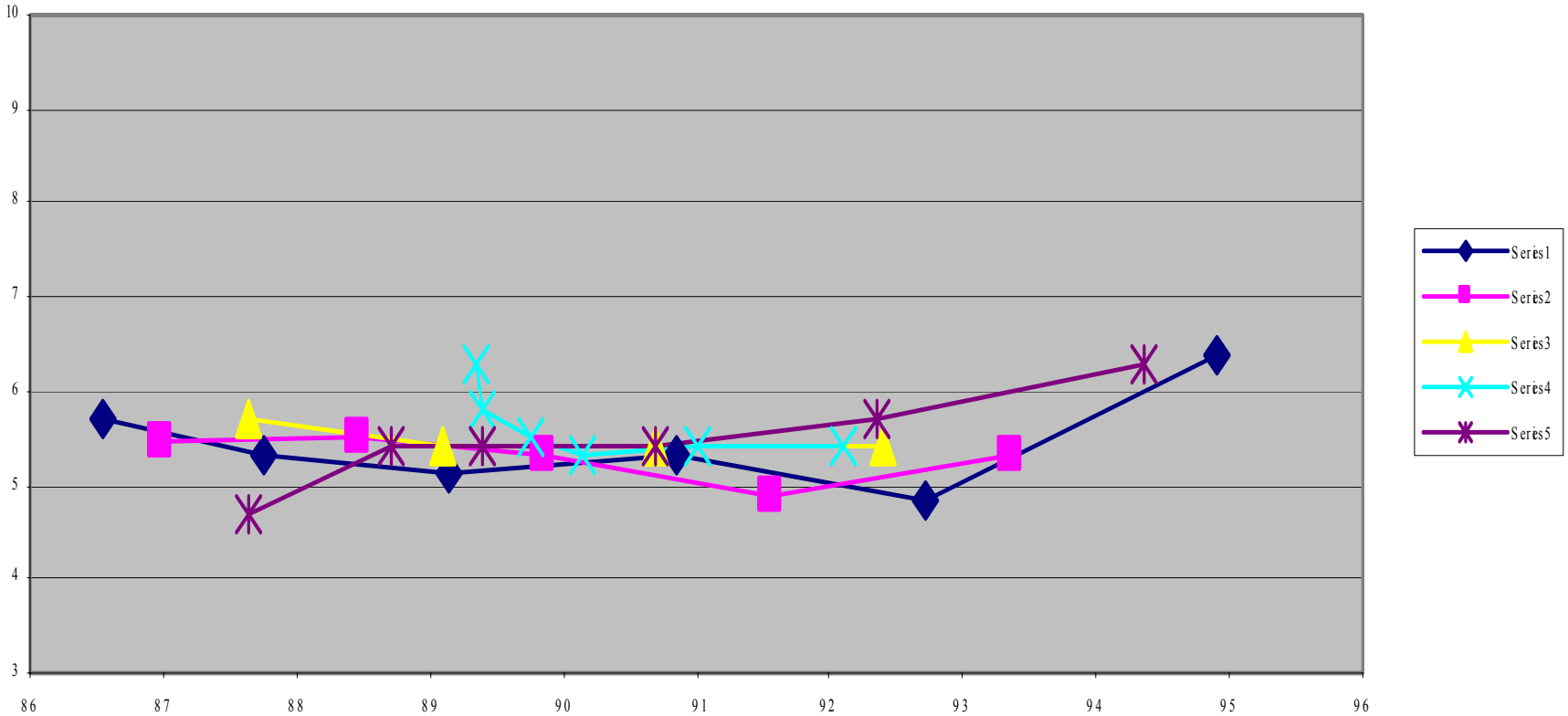

Pipeline Slope (RP=9)

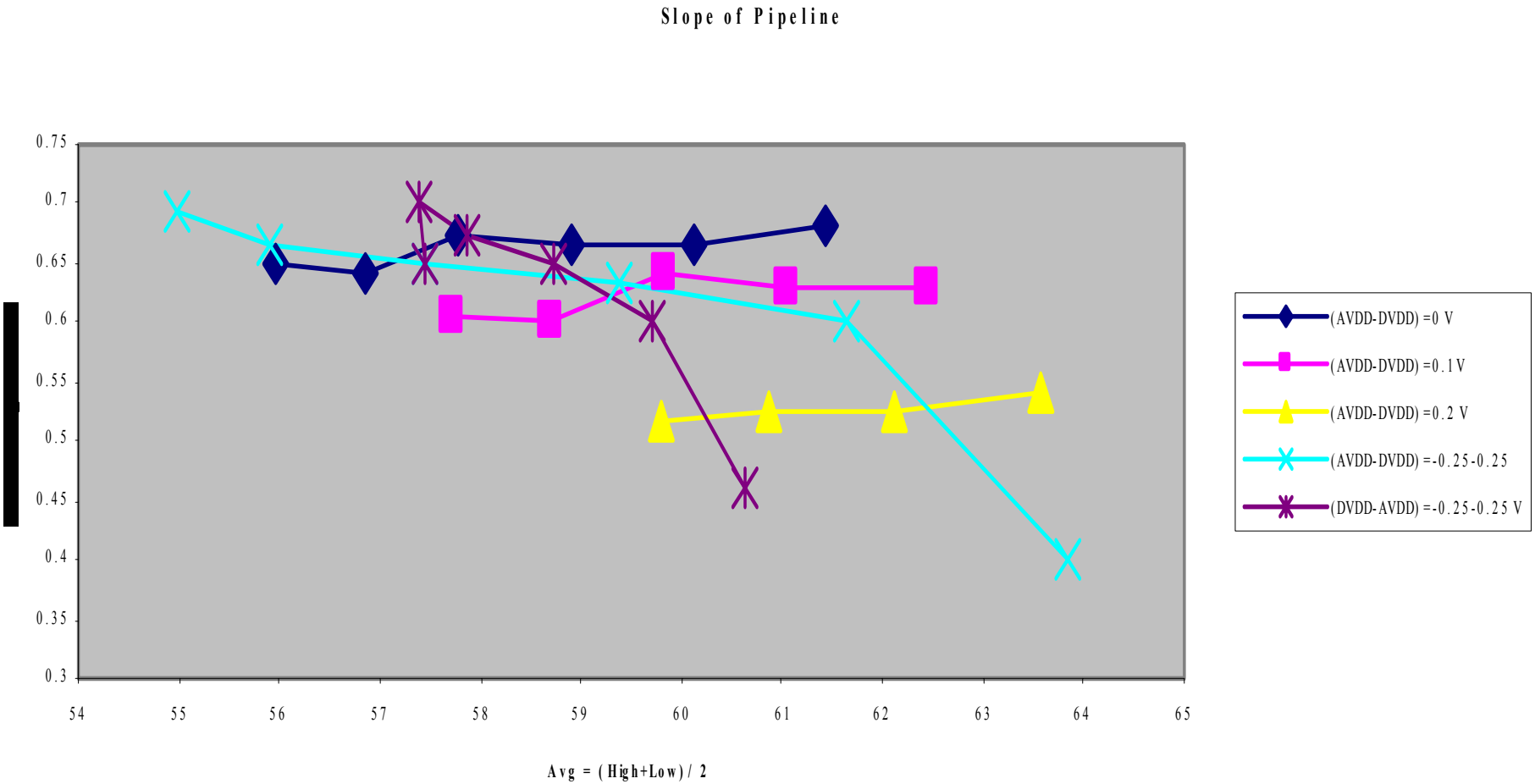

Pipeline Slope (RP=5)

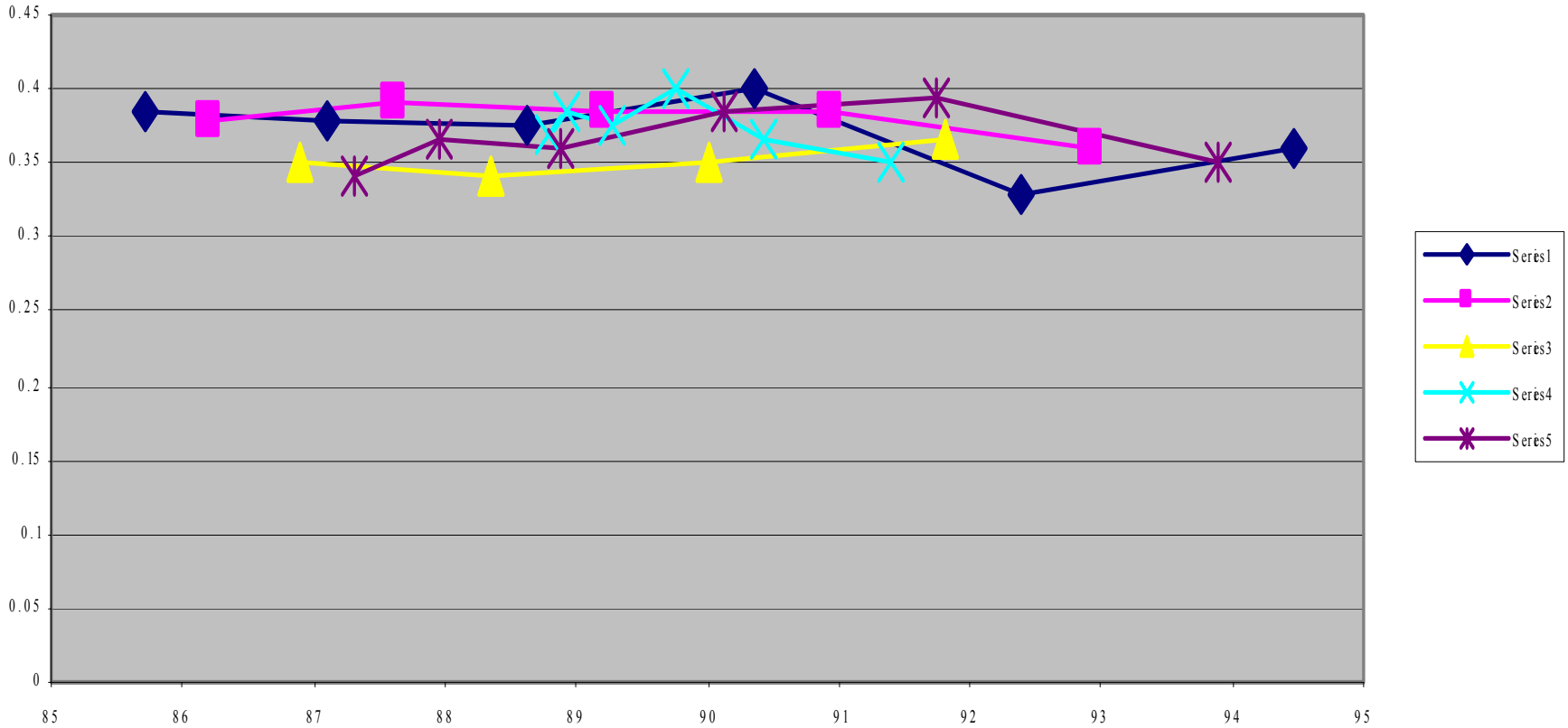

SVX4 ADC Diagram

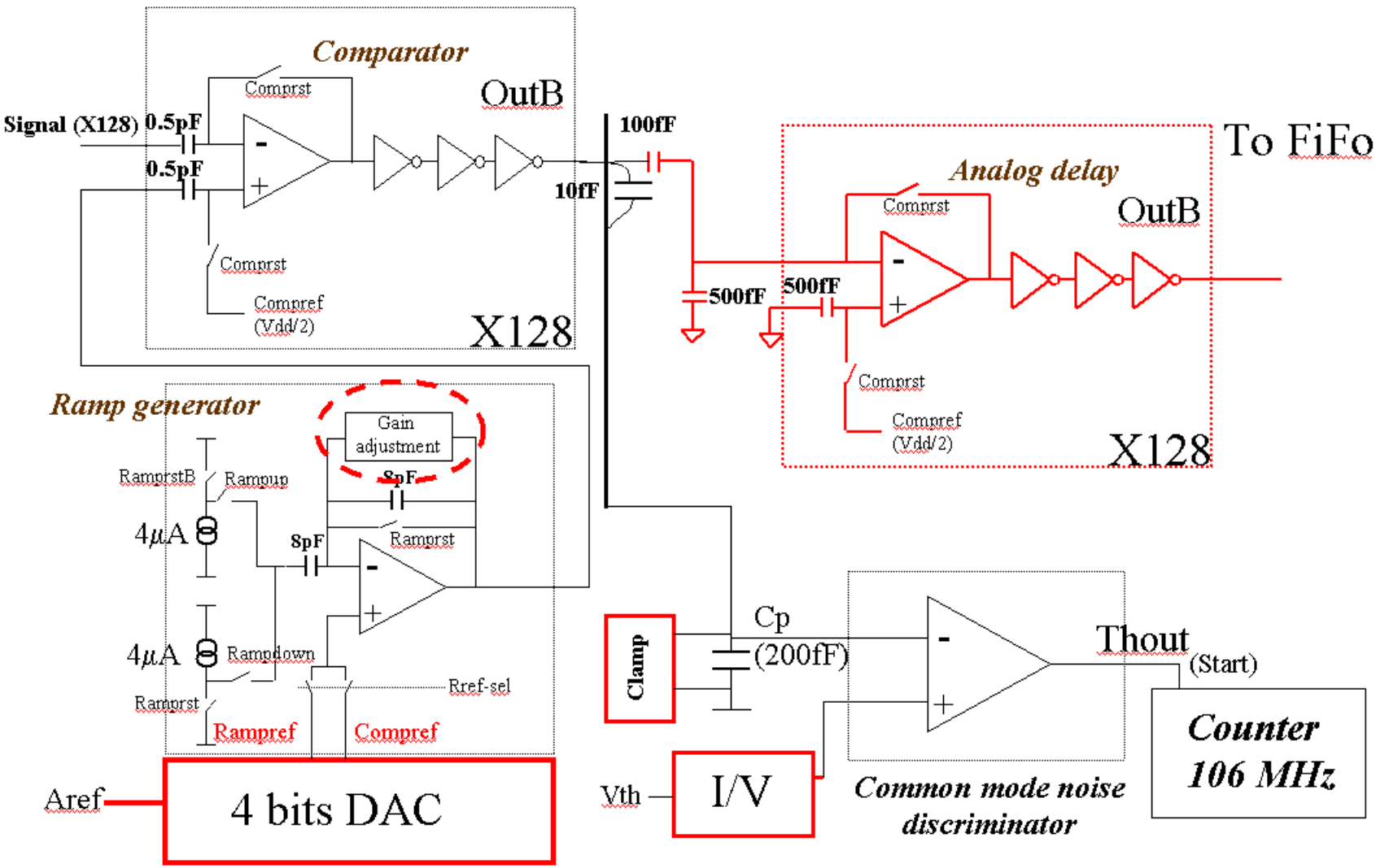

DPS Threshold

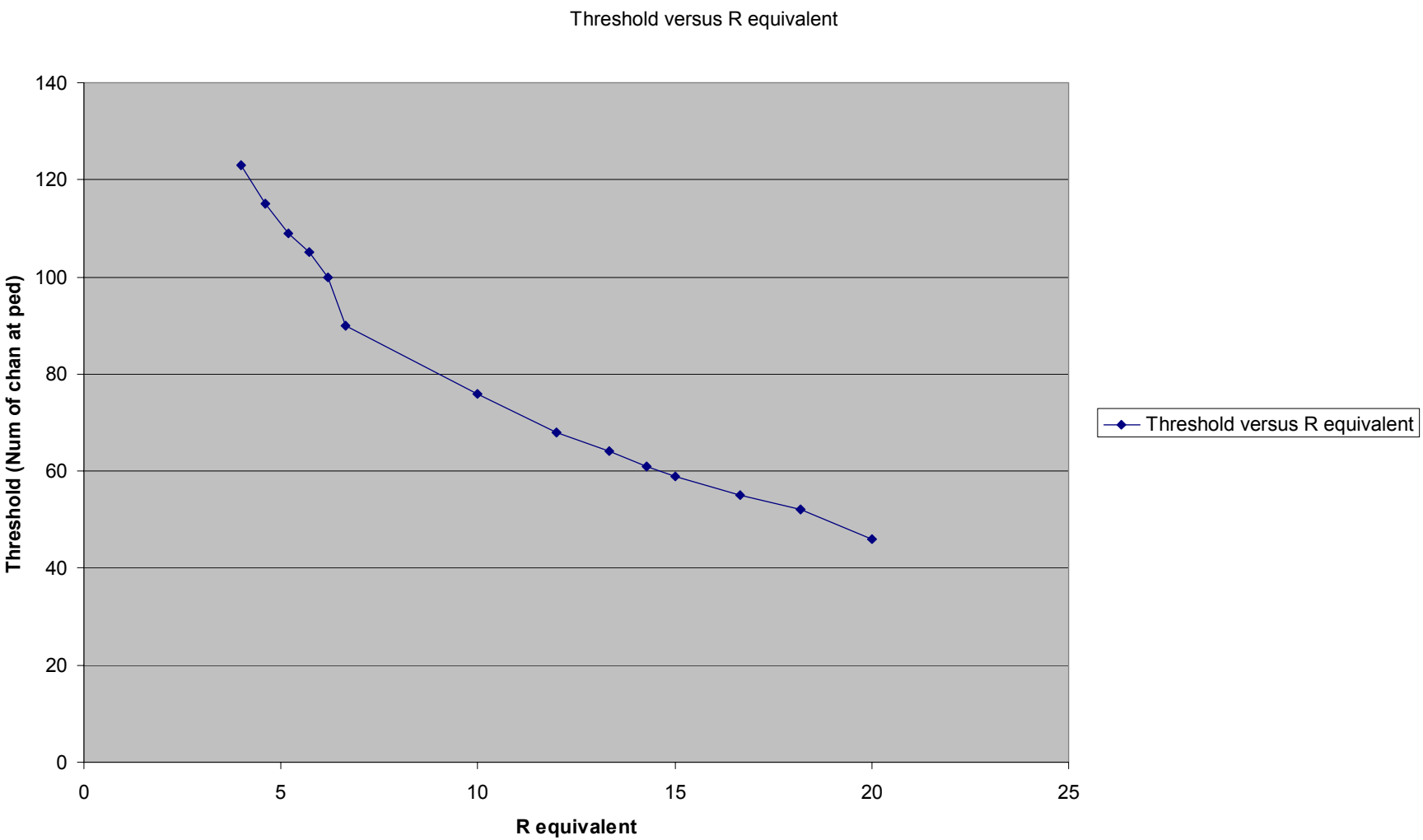

DPS Relative Gain

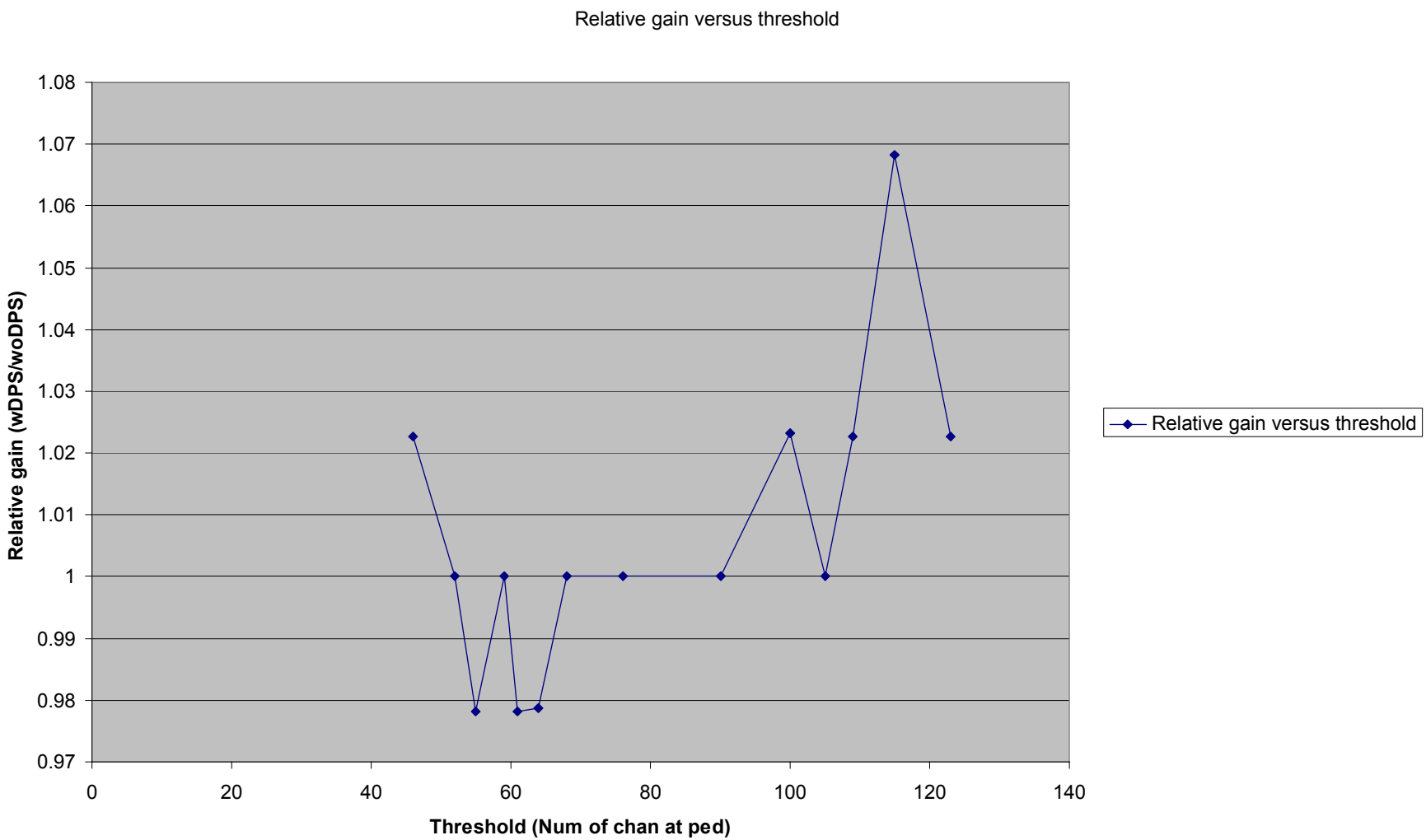

DPS Relative Noise

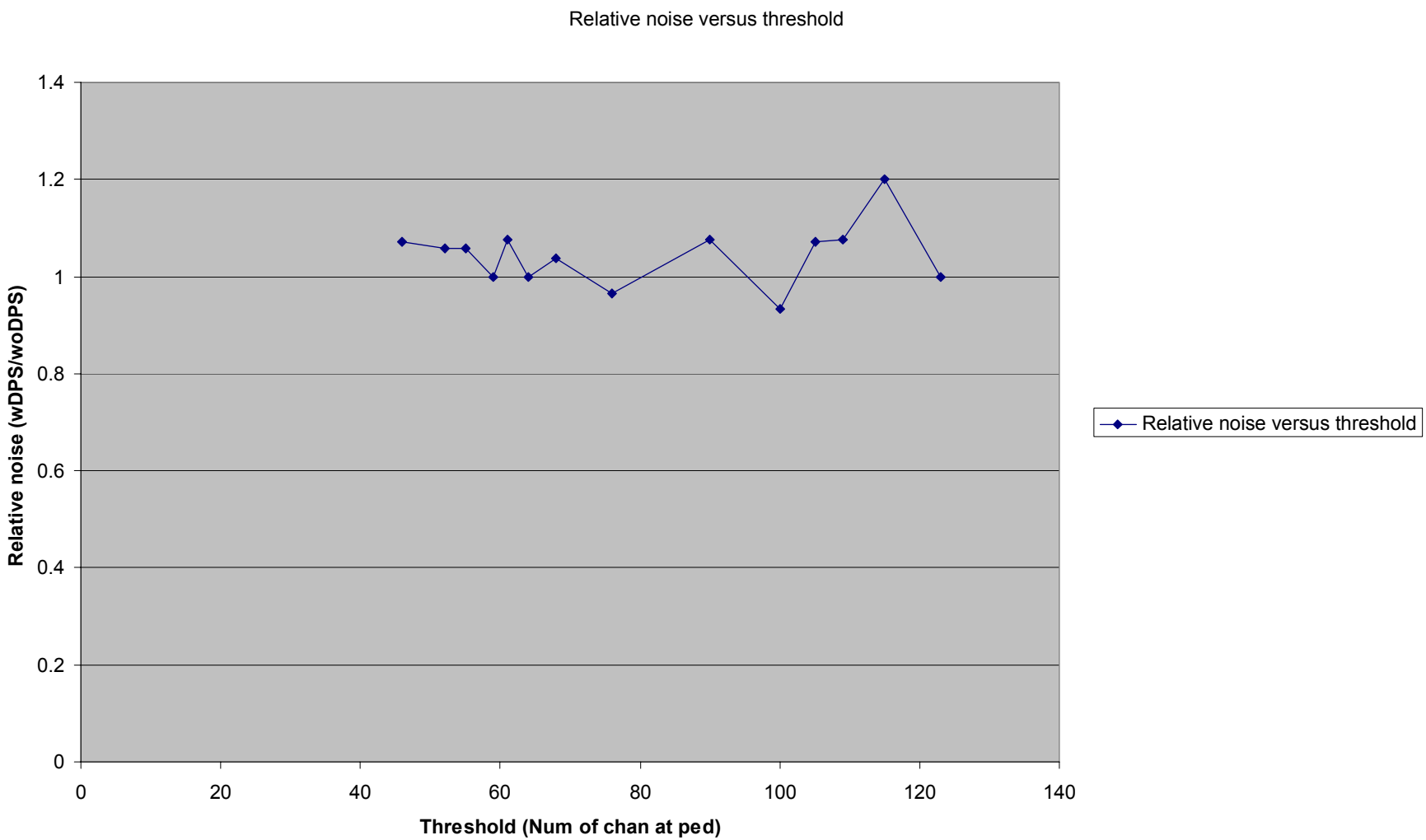

Noise Comparison

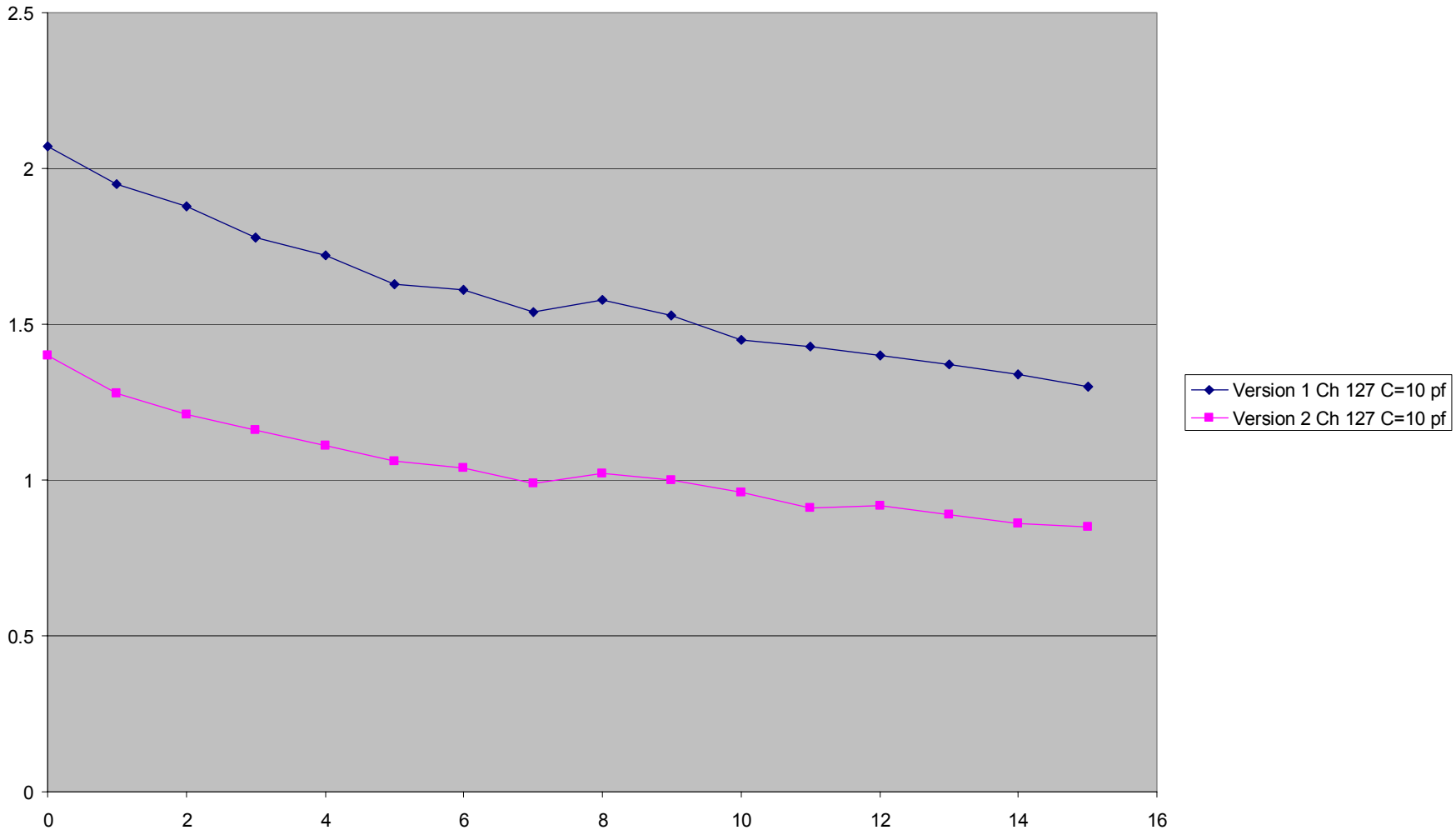

Comparing against simulation

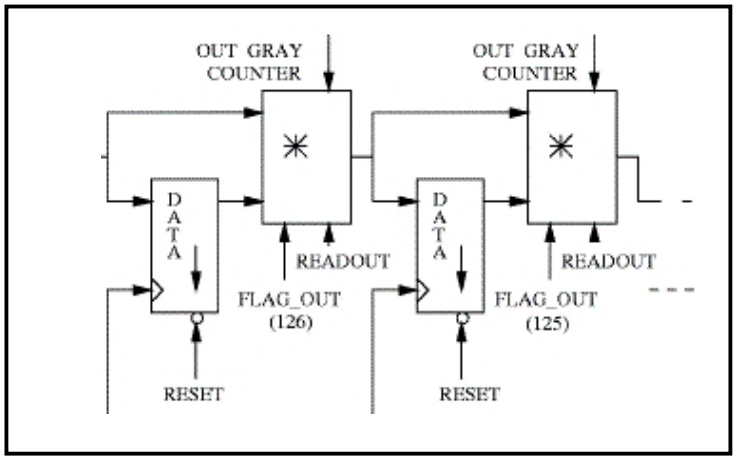

Double readout occurs at 66 MHz

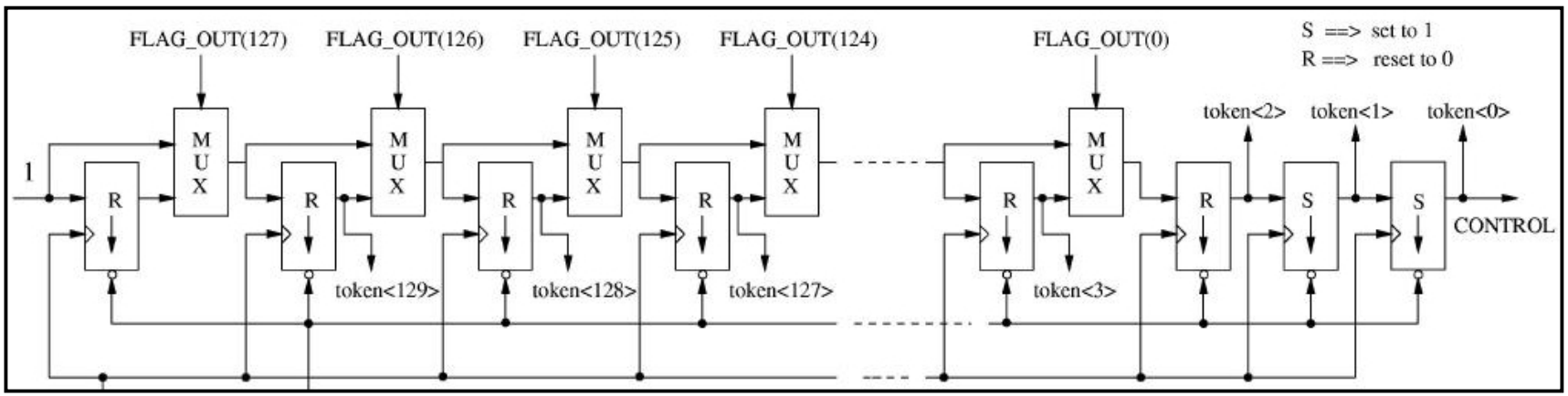

Current Measurement/Power Consumption of the SVX4

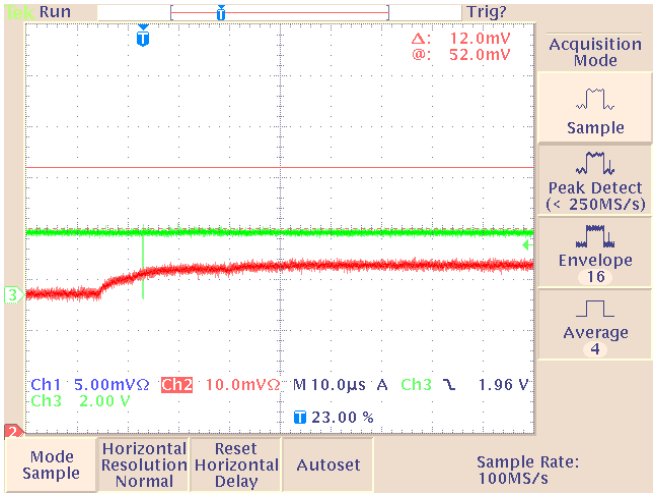

AVDD only

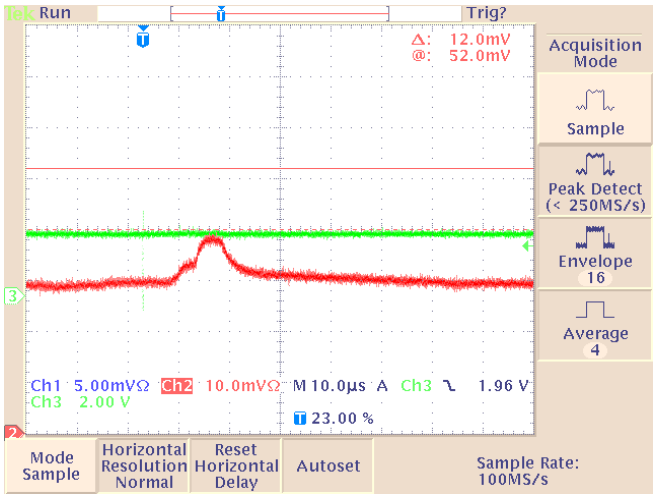

DVDD only

AVDD+ DVDD

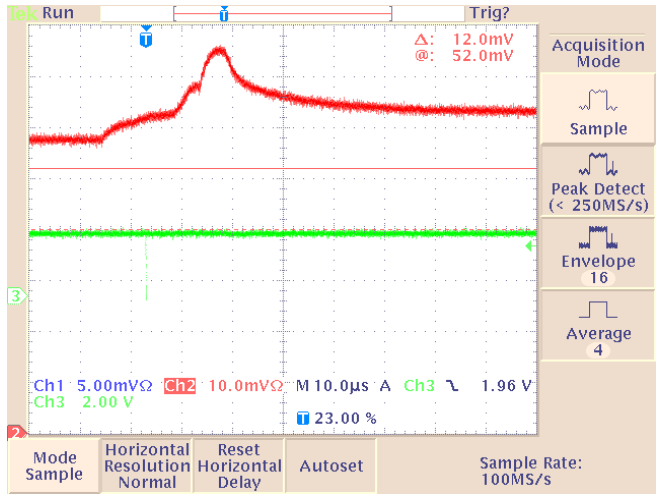

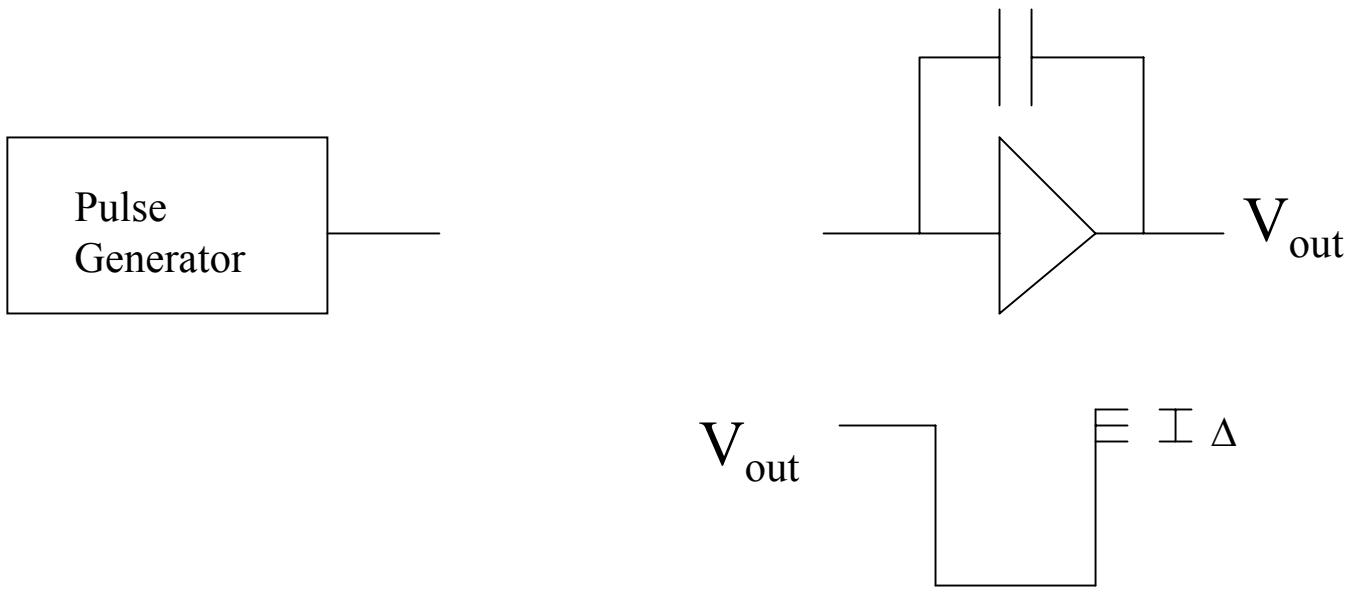

Reset Preamp