Layer 0 Section View
Section at Sensor farthest
away from Z=0
Scale: 3/2
18 May 2002
Joshua Wang

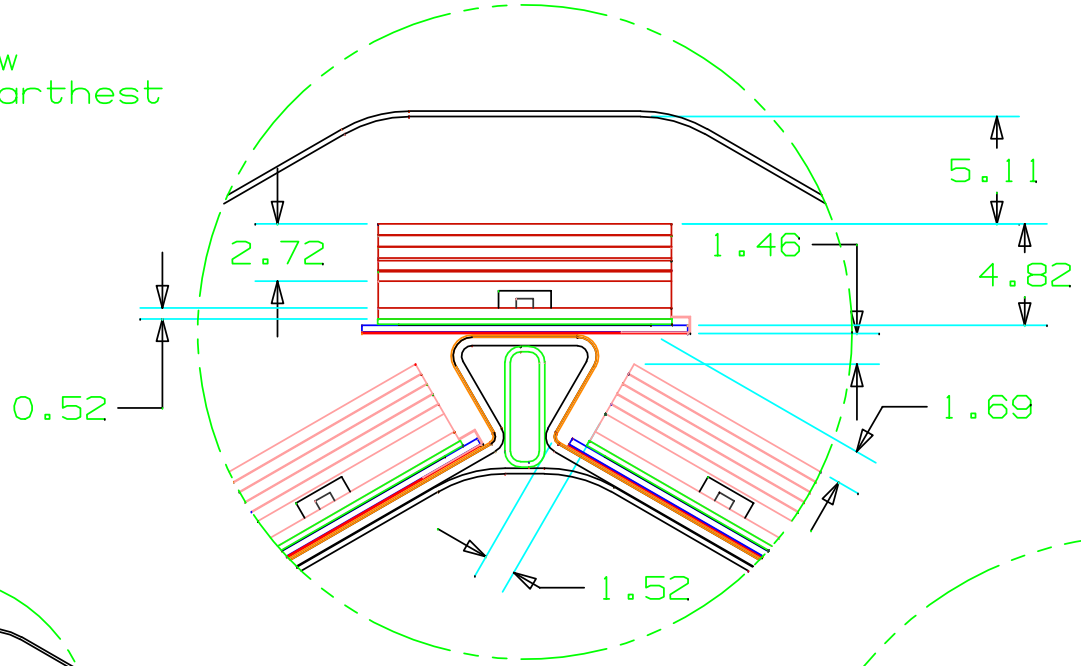

SCALE $\frac{3}{1}$

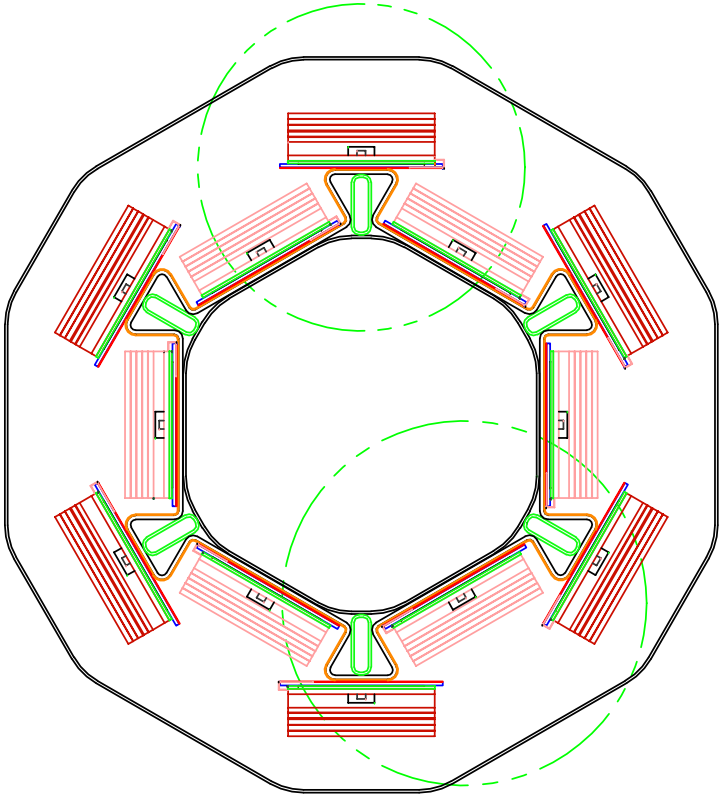

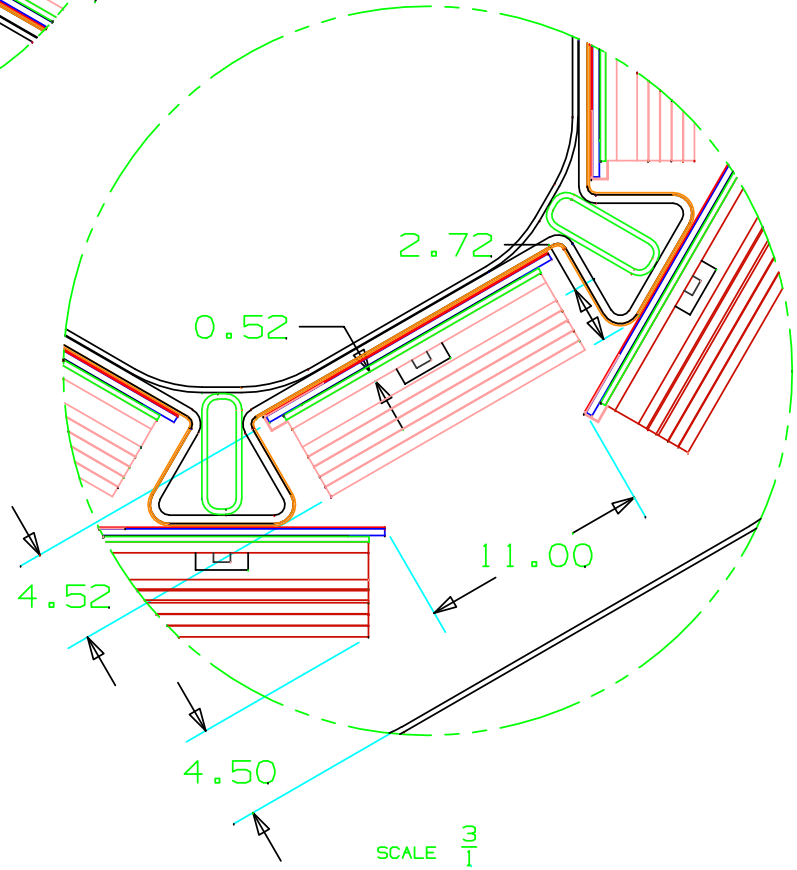

SCALE $\frac{3}{1}$