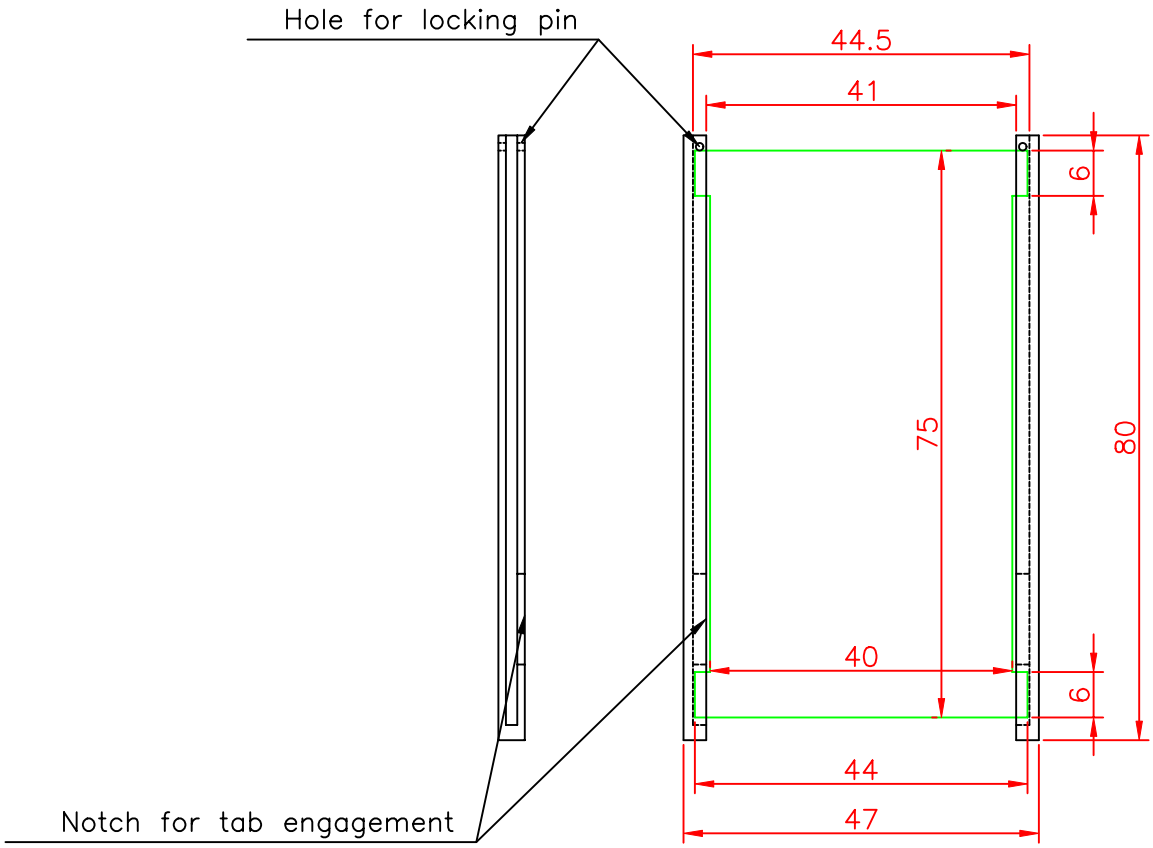
Hole for locking pin
Notch for tab engagement
44.5
41
6
75
80
40
6
44
47