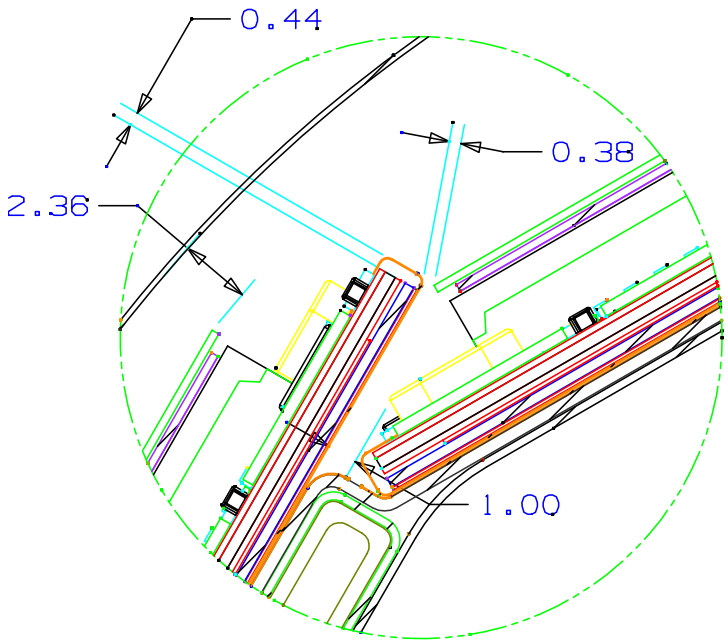

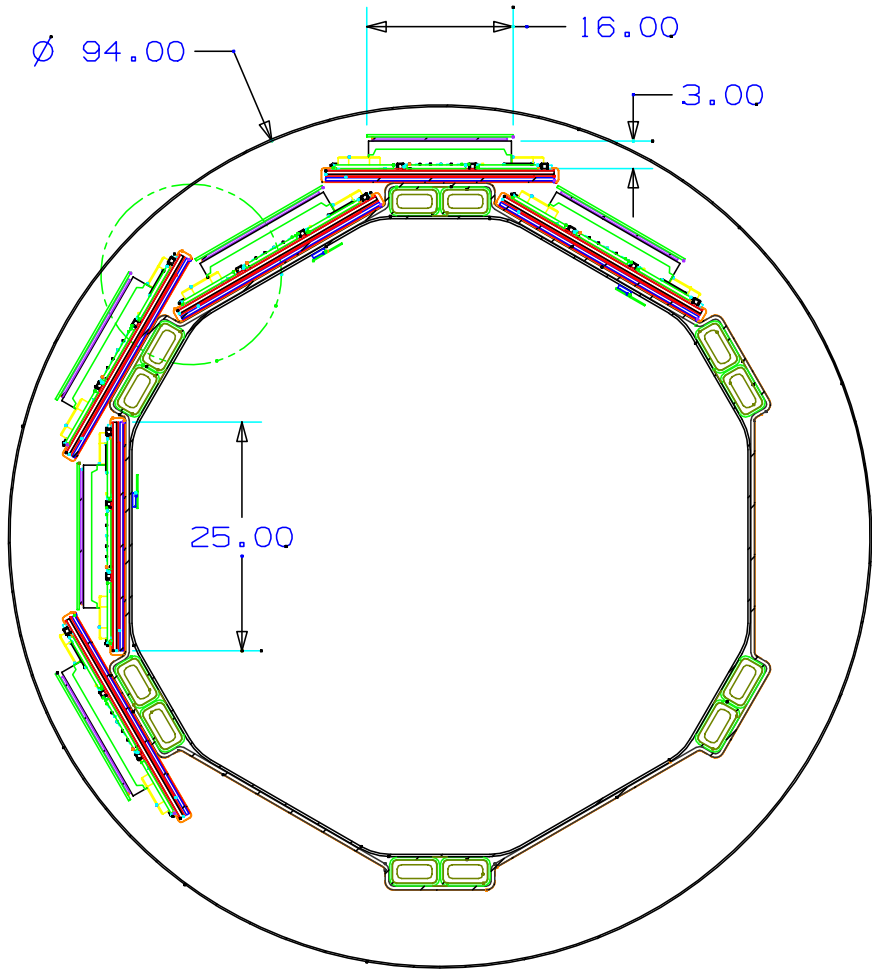

Layer 1 Hybrid Connector
and Cable Backing Options

Option 1:
3 mm connector
16 mm wide backing

Note:
Current Design

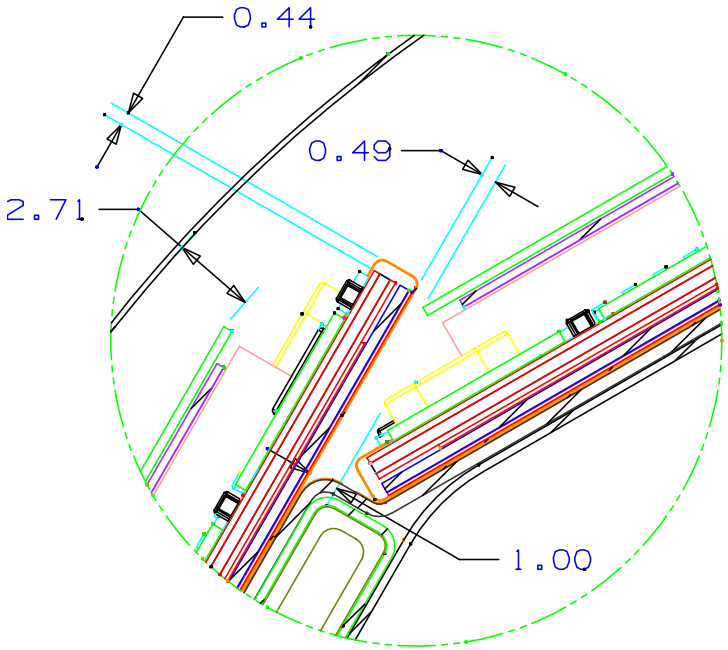

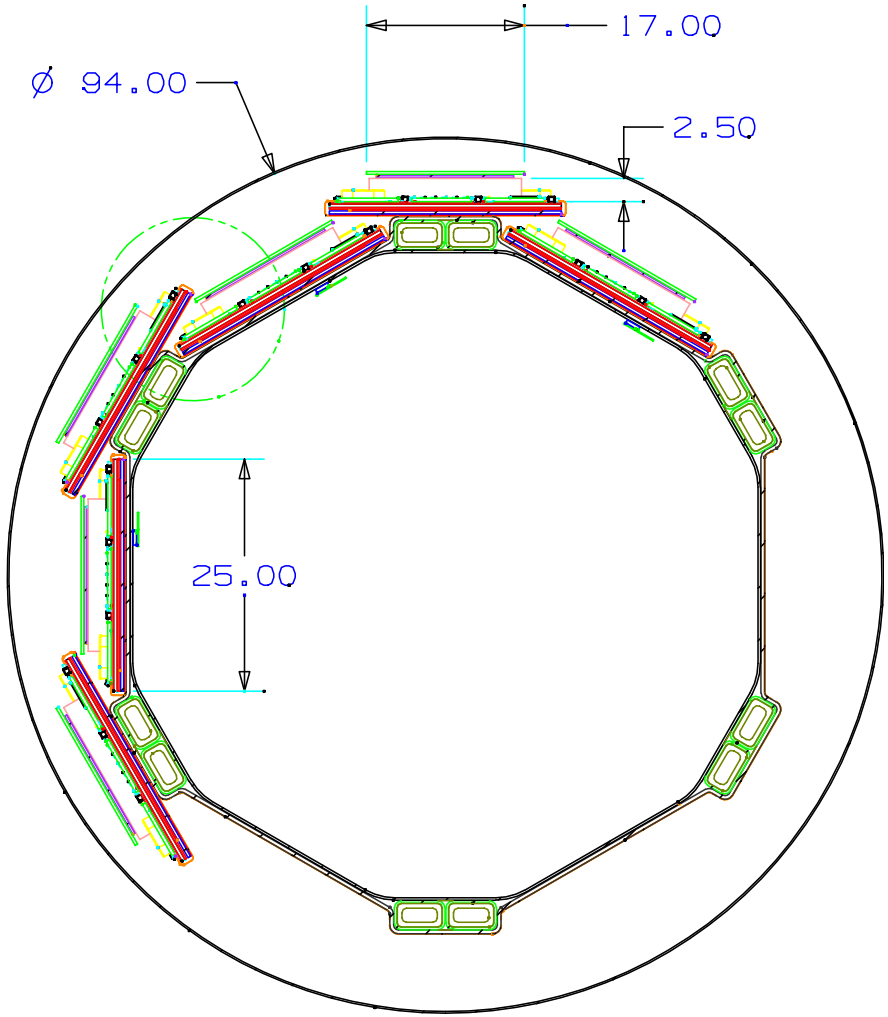

Layer 1 Hybrid Connector
and Cable Backing Options

Option 2:
2.5 mm connector
17 mm wide backing