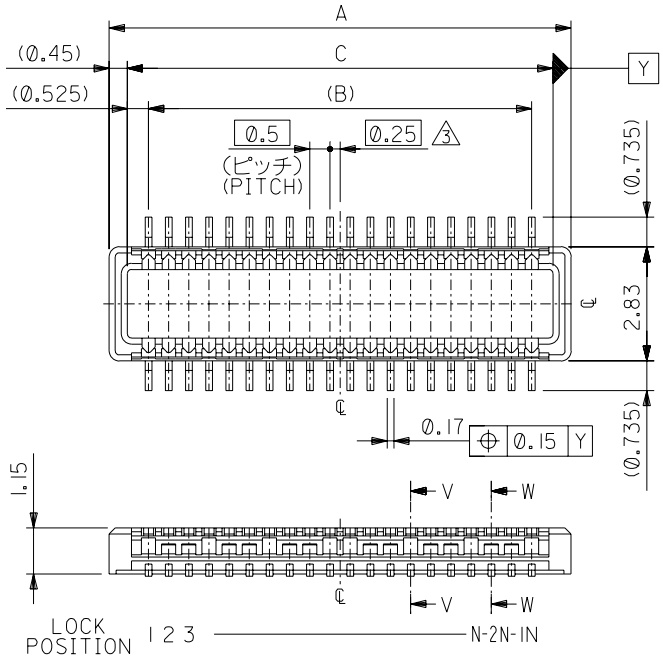

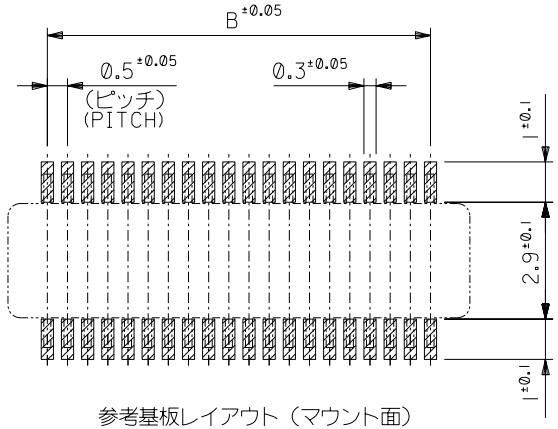

参考基板レイアウト（マウント面）

P.C.BOARD PATTERN DIMENSION. (REF.) (MOUNTING AREA)

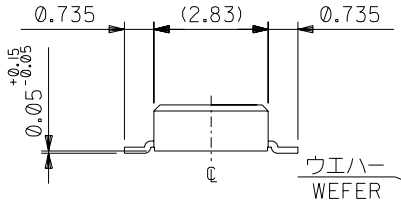

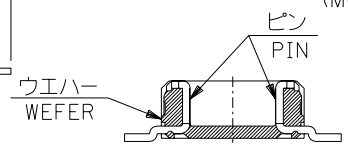

SECT.W-W(LOCK PART)

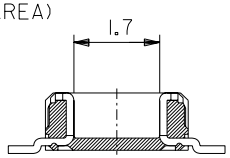

SECT.V-V(W/O LOCK PART)

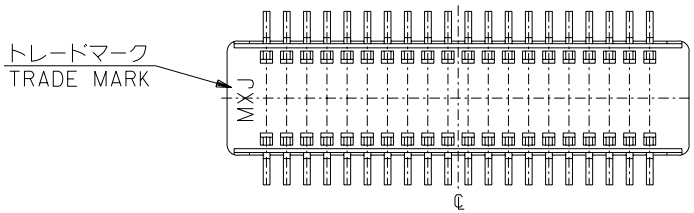

NON	20.55	19.5	21.45	55560-0801	80
10,21	15.55	14.5	16.45	-0601	60
2,4,8,10,16,18,22,24	13.05	12.0	13.95	-0501	50
2,4,8,10,14,16,20,22	12.05	11.0	12.95	-0461	46
2,3,5,6,8,9,12,13,15,16,18,19	10.55	9.5	11.45	-0401	40
2,3,4,5,7,8,9,10,11,13,14,15,16	9.05	8.0	9.95	-0341	34
ALL	8.05	7.0	8.95	-0301	30
	6.55	5.5	7.45	-0241	24
	6.05	5.0	6.95	-0221	22
	5.55	4.5	6.45	-0201	20
	4.55	3.5	5.45	55560-0161	16
LOCK POSITION	C	B	A	MATERIAL NO.	極数 CIRCUIT

MODEL NO. 55560-***1

DIMENSIONS: ☐ mm/INCH ☐ INCH/mm ☒ mm ONLY

SHT | REV

REVISE ON CAD ONLY

DO NOT SCALE DRAWING

REV	DESCRIPTION	DRWN	CH'K	APPR
G	REVISED J2003-2517	S.AIHARA '03/03/31	M.SASAO	M.SASAO
F	REVISED J2003-1929	T.YASUI '03/1/23	T.ITO	T.ITO
E	REVISED J2003-1468	T.YASUI '02/11/25	T.ITO	T.YAMAGUCHI

MATERIAL 材料: 注記参照 SEE NOTES

FINISH 仕上げ: //

WIRE RANGE 適用電線範囲: //

INS. RANGE 被覆外径: //

GENERAL TOLERANCES: (UNLESS SPECIFIED) 一般公差

10 UNDER 未満	±0.2	
10 OVER 以上 30 UNDER 未満	±0.25	
30 OVER 以上	±0.3	
ANGLE 角度	±3°	

SCALE: //

DESIGN UNITS: ☒ mm ☐ INCH

THIRD ANGLE PROJECTION

DRAWN BY & DATE: S.AIHARA '00/10/5

CHECKED BY & DATE: M.SASAO '03/03/31

APPROVED BY & DATE: M.SASAO '03/03/31

TITLE: 0.5 B-To-B Conn PLUG Assy(Hgt=1.5mm)

molex MOLEX INCORPORATED

CAD FILENAME: 55560006.S01

MATERIAL NO.: SEE CHART

DRAWING NO.: SD-55560-006

SHEET NO.: 1 OF 2

THIS DRAWING CONTAINS INFORMATION THAT IS PROPRIETARY TO MOLEX INCORPORATED AND SHOULD NOT BE USED WITHOUT WRITTEN PERMISSION.

SIZE B

DWG. NO. SD-55560-006

55560006.S01

EN-02J(097) MXJ-54

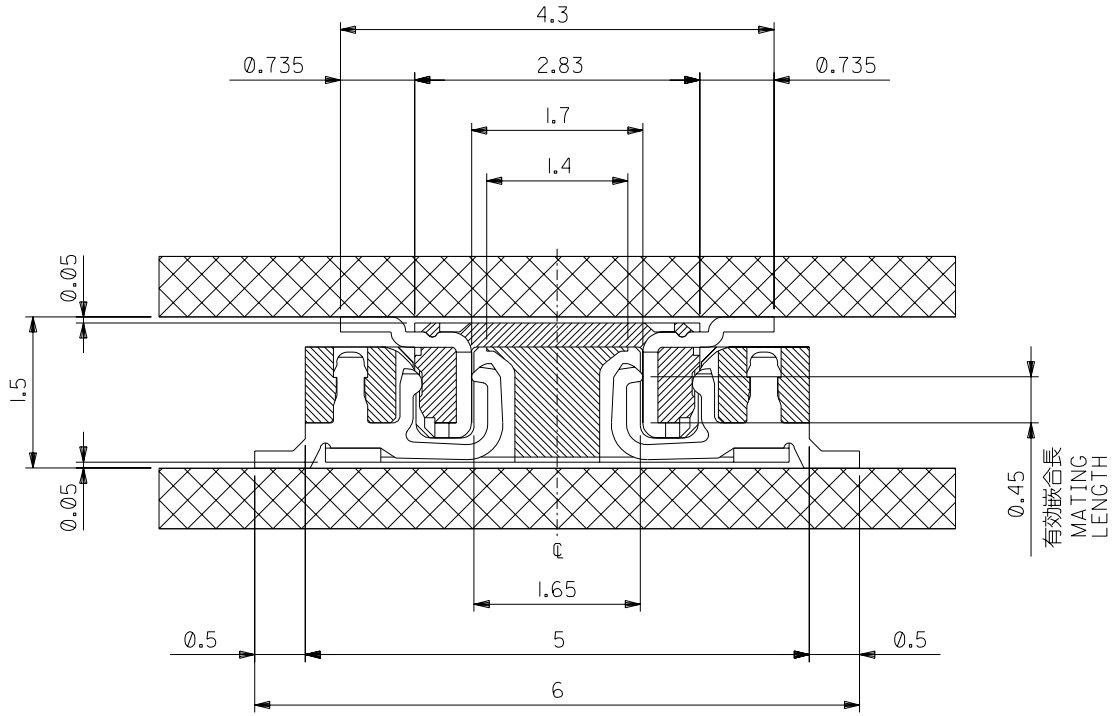

嵌合断面図（参考）

MATED DRAWING (REF.)

注記 NOTES:

1. 使用材料 MATERIAL
   ウェハー：液晶ポリマー　ガラス充填 ,UL94V-0(黒)
   WAFER :LIQUID CRYSTRAL POLYMER
   (GLASS FILLED), UL94V-0 (COLOR:BLACK)
   ピン　：黄銅（t＝0．15）
   PIN　:BRASS(t=0.15)
2. メッキ仕様 PLATING
   金メッキ 0.25 MICROMETER MINIMUM（コンタクト部）
   GOLD 0.25 MICROMETER MINIMUM (CONTACT AREA).
   金メッキ 0.4 MICROMETER MAXIMUM（テール部）
   GOLD 0.4 MICROMETER MAXIMUM (TAIL AREA).
   下地メッキ：ニッケルメッキ 1.5 MICROMETER MINIMUM
   UNDER PLATING : NICKEL 1.5 MICROMETER MINIMUM.
   △3（全極数／2）＝偶数の場合に適用。
   APPLY FOR (CIRCUIT/2)=EVEN.
4. 嵌合相手：54722 シリーズ，54037 シリーズ
   MATE WITH : 54722 SERIES, 54037 SERIES.
5. テール平坦度は、0.1 MAXIMUM
   TAIL COPLANARITY TO BE 0.1 MAXIMUM.

DWG. NO. SD-55560-006

DO NOT SCALE DRAWING

REV	DESCRIPTION	DRWN	CH'K	APPR
G	REVISED 2ECNO. J2003-2517	S.AIHARA '03/03/31	M.SASAO	M.SASAO
F	REVISED 2ECNO. J2003-1929	T.YASUI '03/1/23	T.ITO	T.ITO
E	REVISED 2ECNO. J2003-1468	T.YASUI '02/11/25	T.ITO	T.YAMAGUCHI

MATERIAL 材料: 注記参照 SEE NOTES

FINISH 仕上げ: —//—

WIRE RANGE 適用電線範囲: —//—

INS. RANGE 被覆外径: —//—

GENERAL TOLERANCES: (UNLESS SPECIFIED) 一般公差

10 UNDER 未満	±0.2
10 OVER 以上 30 UNDER 未満	±0.25
30 OVER 以上	±0.3
ANGLE 角度	±3°

SCALE —//—

DESIGN UNITS ☒mm ☐INCH

THIRD ANGLE PROJECTION

DIMENSIONS: ☐mm/INCH ☐INCH/mm ☒mm ONLY

SHT | REV

REVISE ON CAD ONLY

DRAWN BY & DATE: S.AIHARA '00/10/5

CHECKED BY & DATE: M.SASAO '03/03/31

APPROVED BY & DATE: M.SASAO '03/03/31

TITLE: 0.5 B-To-B Conn PLUG Assy(Hgt=1.5mm)

MOLEX INCORPORATED

CAD FILENAME: 55560006.S02

MATERIAL NO.: SEE CHART

DRAWING NO.: SD-55560-006

SHEET NO.: 2 OF 2

THIS DRAWING CONTAINS INFORMATION THAT IS PROPRIETARY TO MOLEX INCORPORATED AND SHOULD NOT BE USED WITHOUT WRITTEN PERMISSION.

SIZE B

55560006.S02

EN-02J(097) MXJ-54

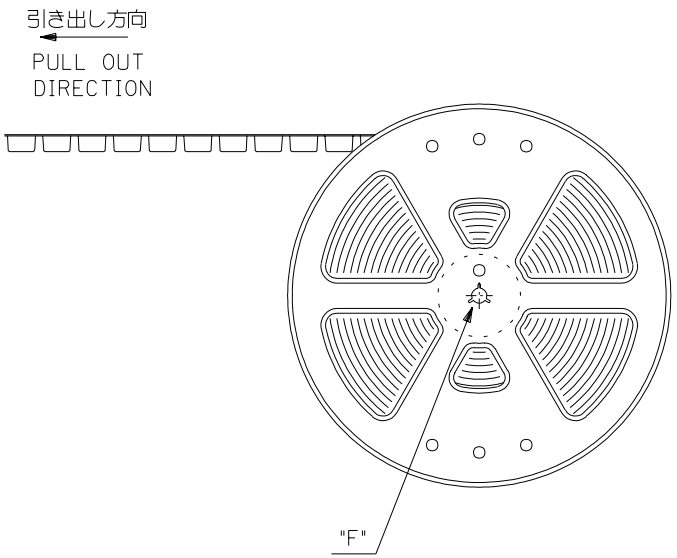

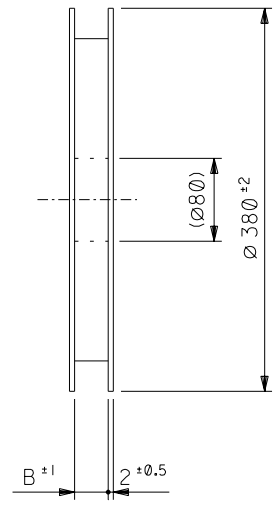

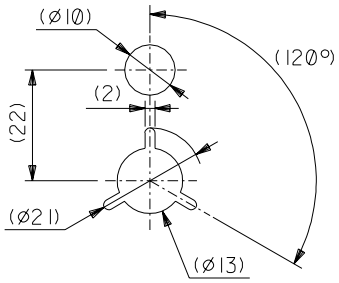

DETAIL "F"

NOTES

1. 製品詳細寸法については図面 SD-55560-006 を参照下さい。
   RE DETAILED DIMENSION, SEE SD-55560-006
2. 梱包数量：３０００個／リール
   NUMBER OF CONNECTORS : 3000PCS/REEL
3. リードテープ長さ LEAD TAPE LENGTH

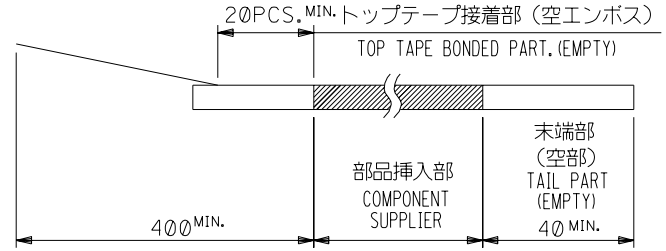

4. トップテープの剥離強度：0.1N ～ 0.7N(10.2gf ～ 71.4gf)
   （剥離方向は下図参照）
   尚、本規格値は出荷時に適用。（但し、輸送時に剥離が発生しないこと。）
   PEELING OFF FORCE OF TOP TAPE : 0.1N ～0.7N(10.2gf ～ 71.4gf)
   (PEELING DIRECTION AS SHOWN IN FOLLOWING FIG,)
   THIS REQUIREMENT SHOULD BE APPLIED AT SHIPMENT.
   PEEL OFF SHOULD NOT BE ALLOWED , DURING TRANSPORTATION.

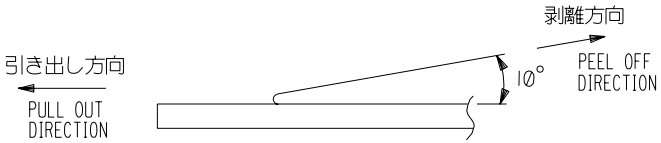

5. 材料　キャリアテープ：ポリプロピレン（ＰＰ）
   トップテープ：ＰＥＴ，ＰＥ，ＰＥＦ
   リール：ポリスチレン（ＰＳ）<リサイクル材を含む>

MATERIAL CARRIER TAPE:POLYPROPYLENE
TOP TAPE:PET,PE,PEF
REEL:POLYSTYRENE (PS)
<RECYCLE MATERIAL CONTAINED>

MODEL NO.	55560-***7	DIMENSIONS:	SHT	REV	MATERIAL 材料	注記参照 SEE NOTES	GENERAL TOLERANCES: (UNLESS SPECIFIED) 一般公差		SCALE -/-	DESIGN UNITS ☒mm ☐INCH	2nd ANGLE PROJECTION
		☐mm/INCH ☐INCH/mm ☒mm ONLY					10 UNDER 未満	±0.2	DRAWN BY & DATE	S.AIHARA '00/10/ 6	
					FINISH 仕上げ	-/-	10 OVER 以上 30 UNDER 未満	±0.25	CHECKED BY & DATE	M.SASAO '03/03/31	
							30 OVER 以上	±0.3	APPROVED BY & DATE	M.SASAO '03/03/31	
					WIRE RANGE 適用電線範囲	-/-	ANGLE 角度	±3°	CAD FILENAME	55560007.S01	
					INS. RANGE 被覆外径	-/-					

DESCRIPTION	REV	2nd NO. DRWN: CH'K: APPR:	2nd NO. DRWN: CH'K: APPR:	2nd NO. DRWN: CH'K: APPR:	REVISED 2nd NO. J2003-2517 DRWN: S.AIHARA '03/03/31 CH'K: M.SASAO APPR: M.SASAO	REVISED 2nd NO. J2003-1929 DRWN: T.YASUI '03/1/23 CH'K: T.ITO APPR: T.ITO					
					F	E					

TITLE: 0.5 B-To-B Conn PLUG Assy (Hgt=1.5) Embstp Pkg

molex MOLEX INCORPORATED

MATERIAL NO.	DRAWING NO.	SHEET NO.
SEE CHART	SD-55560-007	1 OF 5

THIS DRAWING CONTAINS INFORMATION THAT IS PROPRIETARY TO MOLEX INCORPORATED AND SHOULD NOT BE USED WITHOUT WRITTEN PERMISSION.

SIZE B

DWG. NO. SD-55560-007

DO NOT SCALE DRAWING

55560007.S01

EN-02J(097) MXJ-54

DWG. NO. SD-55560-007

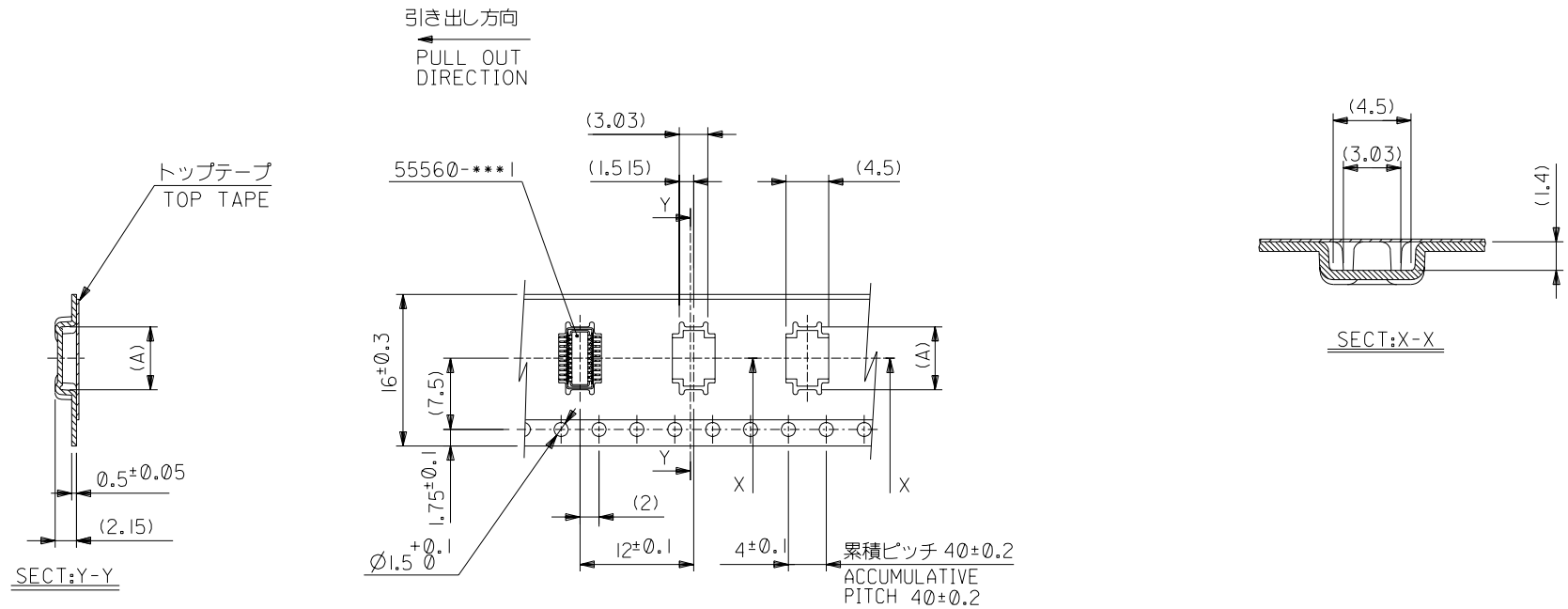

16mm幅キャリアテープ

16mm WIDTH CARRIER TAPE

16	17.5	6.65	55560-0207	20
キャリアテープ幅 CARRIER TAPE WIDTH	B	(A)	MATERIAL NO.	極数 CIRCUIT

MODEL NO. 55560-***7

DIMENSIONS: ☐ mm/INCH ☐ INCH/mm ☒ mm ONLY

SHT | REV

DO NOT SCALE DRAWING

234NO. DRWN: CH'K: APPR:	233NO. DRWN: CH'K: APPR:	232NO. DRWN: CH'K: APPR:	REVISED 231NO. J2003-2517 DRWN: S.AIHARA '03/03/31 CH'K: M.SASAO APPR: M.SASAO	REVISED 230NO. J2003-1929 DRWN: T.YASUI '03/1/23 CH'K: T.ITO APPR: T.ITO	DESCRIPTION
			F	E	REV

MATERIAL 材料: SHEET 1 OF 5 参照 REFER TO SHEET 1 OF 5

FINISH 仕上げ: //

WIRE RANGE 適用電線範囲: //

INS. RANGE 被覆外径: //

GENERAL TOLERANCES: (UNLESS SPECIFIED) 一般公差

10 UNDER 未満	±0.2
10 OVER 以上 30 UNDER 未満	±0.25
30 OVER 以上	±0.3
ANGLE 角度	±3°

SCALE: //

DESIGN UNITS: ☒mm ☐INCH

THIRD ANGLE PROJECTION

REVISE ON CAD ONLY

DRAWN BY & DATE: S.AIHARA '00/10/ 6

CHECKED BY & DATE: M.SASAO '03/03/31

APPROVED BY & DATE: M.SASAO '03/03/31

TITLE: 0.5 B-To-B Conn PLUG Assy (Hgt=1.5) Embstp Pkg

MOLEX INCORPORATED

CAD FILENAME: 55560007.S02

MATERIAL NO.: SEE CHART

DRAWING NO.: SD-55560-007

SHEET NO.: 2 OF 5

SIZE: B

THIS DRAWING CONTAINS INFORMATION THAT IS PROPRIETARY TO MOLEX INCORPORATED AND SHOULD NOT BE USED WITHOUT WRITTEN PERMISSION.

55560007.S02

EN-02J(097) MXJ-54

DWG. NO. SD-55560-007

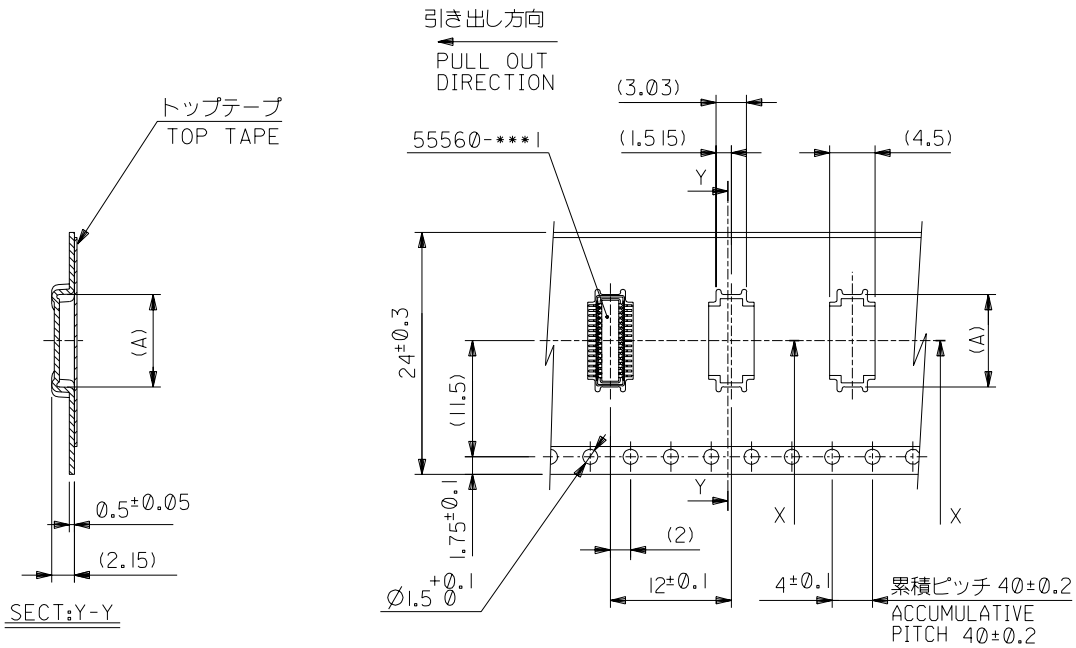

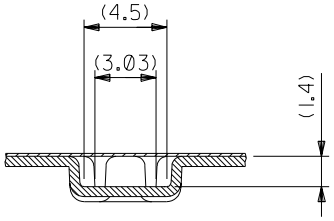

24mm幅キャリアテープ

24mm WIDTH CARRIER TAPE

キャリアテープ幅 CARRIER TAPE WIDTH	B	(A)	MATERIAL NO.	極数 CIRCUIT
24	25.5	14.15	55560-0507	50
		13.15	55560-0467	46
		11.65	55560-0407	40
		10.15	55560-0347	34
		9.15	55560-0307	30
		7.65	55560-0247	24

MODEL NO. 55560-***7

DIMENSIONS: ☐ mm/INCH ☐ INCH/mm ☒ mm ONLY

SHT REV

REVISE ON CAD ONLY

234NO. DRWN: CH'K: APPR:	233NO. DRWN: CH'K: APPR:	232NO. DRWN: CH'K: APPR:	REVISED 231NO. J2003-2517 DRWN: S.AIHARA '03/03/31 CH'K: M.SASAO APPR: M.SASAO	REVISED 230NO. J2003-1929 DRWN: T.YASUI '03/1/23 CH'K: T.ITO APPR: T.ITO
			F	E

REV DESCRIPTION

MATERIAL 材料: SHEET 1 OF 5 参照 REFER TO SHEET 1 OF 5

FINISH 仕上げ: //

WIRE RANGE 適用電線範囲: //

INS. RANGE 被覆外径: //

GENERAL TOLERANCES: (UNLESS SPECIFIED) 一般公差

10 UNDER 未満	±0.2
10 OVER 以上 30 UNDER 未満	±0.25
30 OVER 以上	±0.3
ANGLE 角度	±3°

SCALE: //

DESIGN UNITS: ☒mm ☐INCH

THIRD ANGLE PROJECTION

DRAWN BY & DATE: S.AIHARA '00/10/ 6

CHECKED BY & DATE: M.SASAO '03/03/31

APPROVED BY & DATE: M.SASAO '03/03/31

TITLE: 0.5 B-To-B Conn PLUG Assy (Hgt=1.5) Embstp Pkg

MOLEX INCORPORATED

CAD FILENAME: 55560007.S03

MATERIAL NO.: SEE CHART

DRAWING NO.: SD-55560-007

SHEET NO.: 3 OF 5

SIZE: B

THIS DRAWING CONTAINS INFORMATION THAT IS PROPRIETARY TO MOLEX INCORPORATED AND SHOULD NOT BE USED WITHOUT WRITTEN PERMISSION.

DO NOT SCALE DRAWING

55560007.S03

EN-02J(097) MXJ-54

DWG. NO. SD-55560-007

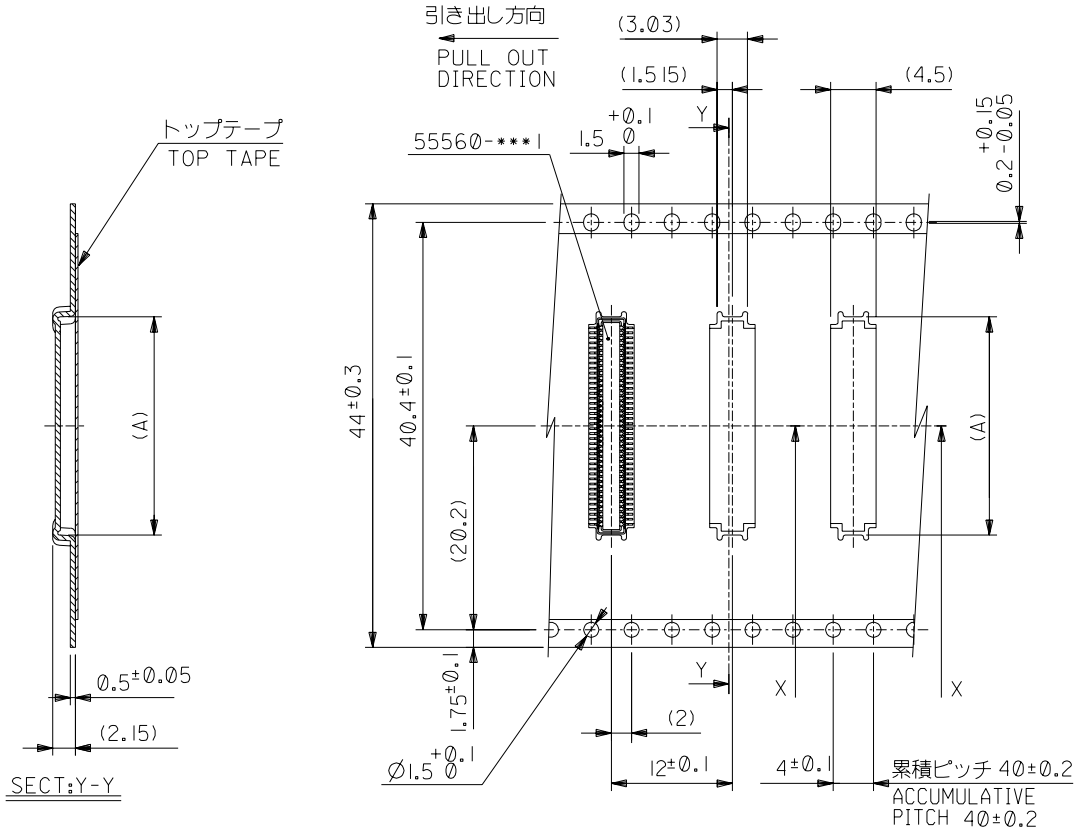

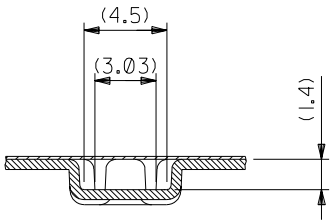

44mm幅キャリアテープ

44mm WIDTH CARRIER TAPE

44	45.5	21.65	55560-0807	80
キャリアテープ幅 CARRIER TAPE WIDTH	B	(A)	MATERIAL NO.	極数 CIRCUIT

MODEL NO. 55560-***7

REV	DESCRIPTION	DRAWN	CH'K	APPR
04				
03	REVISED J2003-2517	S.AIHARA '03/03/31	M.SASAO	M.SASAO
02	REVISED J2003-1929	T.YASUI '03/1/23	T.ITO	T.ITO
01	REVISED J2003-1468	T.YASUI '02/11/25	T.ITO	T.YAMAGUCHI
00	REVISED J2002-2268	T.YASUI '02/03/06	T.ITO	T.YAMAGUCHI

MATERIAL 材料: SHEET 1 OF 5 参照 REFER TO SHEET 1 OF 5

FINISH 仕上げ: //

WIRE RANGE 適用電線範囲: //

INS. RANGE 被覆外径: //

GENERAL TOLERANCES: (UNLESS SPECIFIED) 一般公差

10 UNDER 未満		±0.2
10 OVER 以上	30 UNDER 未満	±0.25
30 OVER 以上		±0.3
ANGLE 角度		±3°

SCALE: //

DESIGN UNITS: ☒mm ☐INCH

THIRD ANGLE PROJECTION

DIMENSIONS: ☐ mm/INCH ☐ INCH/mm ☒ mm ONLY

SHT | REV

REVISE ON CAD ONLY

DRAWN BY & DATE: T.YASUI '02/03/06

CHECKED BY & DATE: M.SASAO '03/03/31

APPROVED BY & DATE: M.SASAO '03/03/31

TITLE: 0.5 B-To-B Conn PLUG Assy (Hgt=1.5) Embstp Pkg

MOLEX INCORPORATED

CAD FILENAME: 55560007.S04

MATERIAL NO.: SEE CHART

DRAWING NO.: SD-55560-007

SHEET NO.: 5 OF 5

THIS DRAWING CONTAINS INFORMATION THAT IS PROPRIETARY TO MOLEX INCORPORATED AND SHOULD NOT BE USED WITHOUT WRITTEN PERMISSION.

SIZE B

DO NOT SCALE DRAWING

55560007.S04

EN-02J(097) MXJ-54

DWG. NO. SD-55560-007

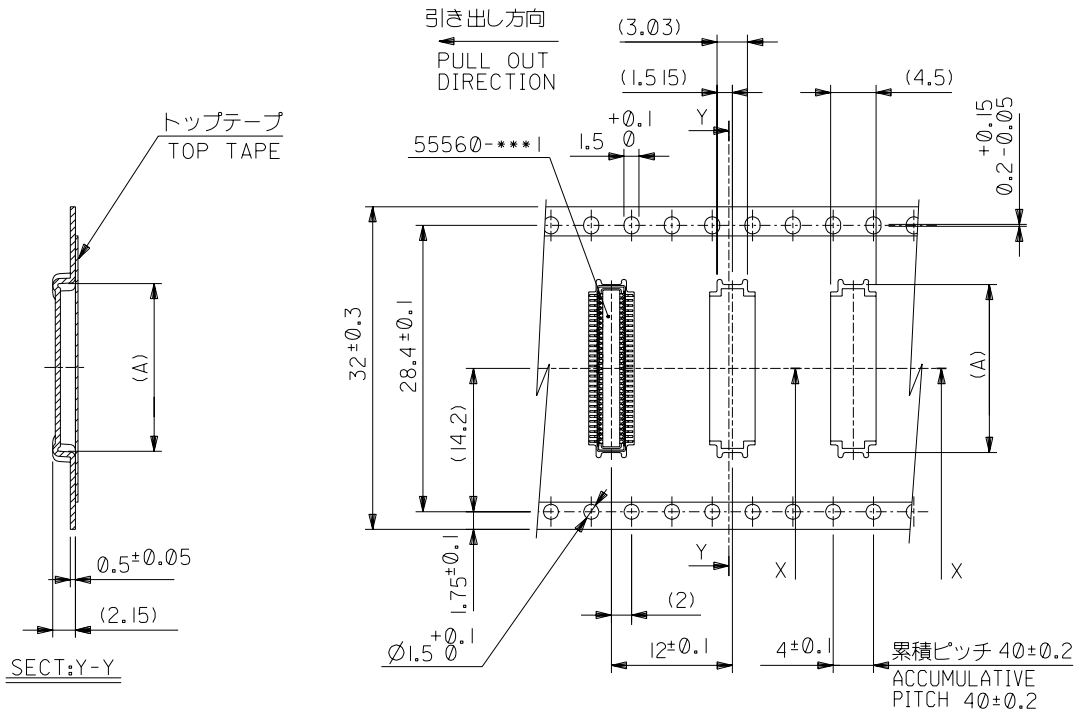

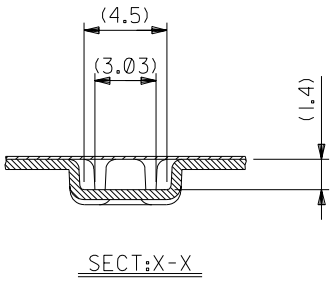

32mm幅キャリアテープ

32mm WIDTH CARRIER TAPE

32	33.5	16.65	55560-0607	60
キャリアテープ幅 CARRIER TAPE WIDTH	B	(A)	MATERIAL NO.	極数 CIRCUIT

MODEL NO. 55560-***7

REV	DESCRIPTION	DRWN	CH'K	APPR
F	REVISED J2003-2517	S.AIHARA '03/03/31	M.SASAO	M.SASAO
E	REVISED J2003-1929	T.YASUI '03/1/23	T.ITO	T.ITO
D	REVISED J2003-1468	T.YASUI '02/11/25	T.ITO	T.YAMAGUCHI

MATERIAL 材料: SHEET 1 OF 5 参照 REFER TO SHEET 1 OF 5

FINISH 仕上げ: //

WIRE RANGE 適用電線範囲: //

INS. RANGE 被覆外径: //

GENERAL TOLERANCES: (UNLESS SPECIFIED) 一般公差

10 UNDER 未満		±0.2
10 OVER 以上 30 UNDER 未満		±0.25
30 OVER 以上		±0.3
ANGLE 角度		±3°

SCALE: //

DESIGN UNITS: ☒mm ☐INCH

THIRD ANGLE PROJECTION

DIMENSIONS: ☐ mm/INCH ☐ INCH/mm ☒ mm ONLY

SHT | REV

REVISE ON CAD ONLY

DRAWN BY & DATE: T.YASUI '02/11/25

CHECKED BY & DATE: M.SASAO '03/03/31

APPROVED BY & DATE: M.SASAO '03/03/31

TITLE: 0.5 B-To-B Conn PLUG Assy (Hgt=1.5) Embstp Pkg

MOLEX INCORPORATED

CAD FILENAME: 55560007.S05

MATERIAL NO.: SEE CHART

DRAWING NO.: SD-55560-007

SHEET NO.: 4 OF 5

THIS DRAWING CONTAINS INFORMATION THAT IS PROPRIETARY TO MOLEX INCORPORATED AND SHOULD NOT BE USED WITHOUT WRITTEN PERMISSION.

SIZE B

DO NOT SCALE DRAWING

55560007.S05

EN-02J(097) MXJ-54