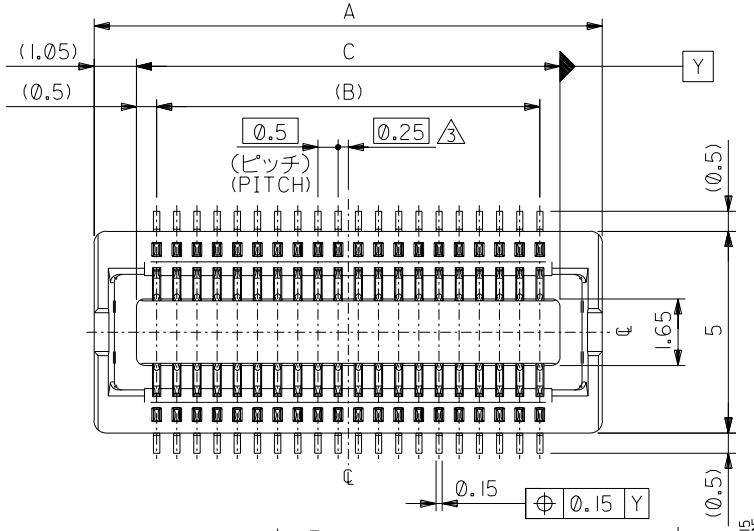

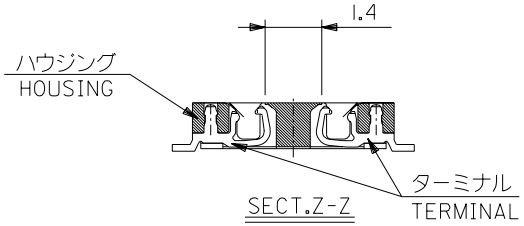

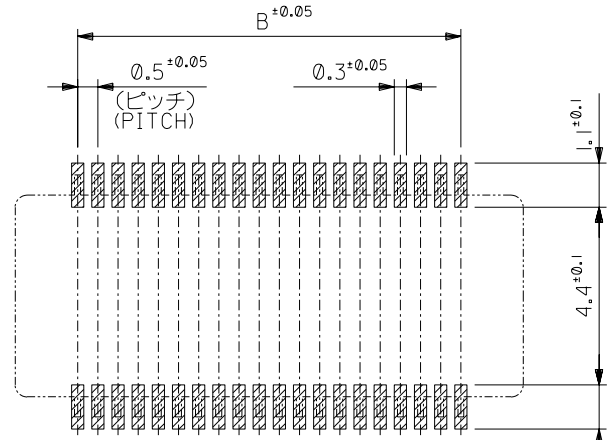

参考基板レイアウト（マウント面）

P.C.BOARD PATTERN
DIMENSION.(REF.)
(MOUNTING AREA)

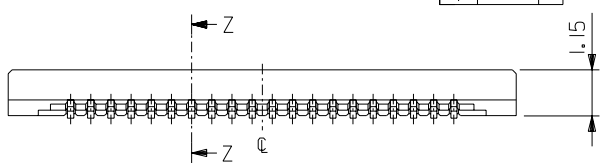

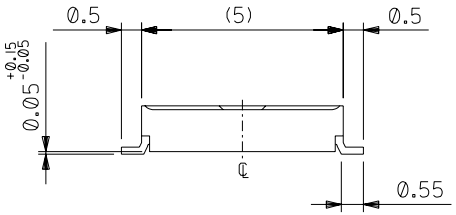

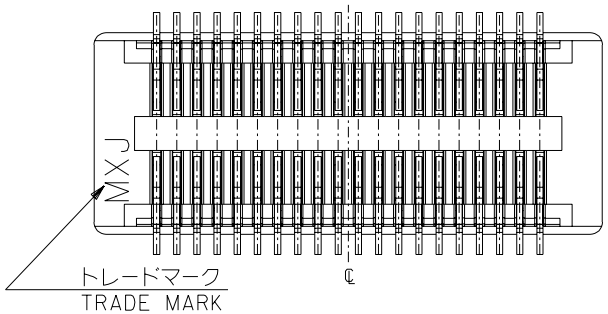

30極以下品形状
SHAPE OF 30CIRCUITS OR LESS

注記 NOTES:

1. 使用材料 MATERIAL
   ハウジング：液晶ポリマー　ガラス充填,UL94V-0（黒）
   HOUSING:LIQUID CRYSTRAL POLYMER (GLASS FILLED)
   UL94V-0,(COLOR:BLACK)
   ターミナル：リン青銅（t＝0．15）
   TERMINAL:PHOSPHOR BRONZE(t=0.15)
2. メッキ仕様 PLATING
   金メッキ 0.25 MICROMETER MINIMUM（コンタクト部）
   GOLD 0.25 MICROMETER MINIMUM.(CONTACT AREA)
   金メッキ 0.4 MICROMETER MAXIMUM（テール部）
   GOLD 0.4 MICROMETER MAXIMUM.(TAIL AREA)
   下地メッキ：ニッケルメッキ 1.5 MICROMETER MINIMUM
   UNDER PLATING : NICKEL 1.5 MICROMETER MINIMUM

3 （全極数／2）＝偶数の場合に適用。
APPLY FOR (CIRCUIT/2)=EVEN.
4 嵌合相手：55560 シリーズ, 53794 シリーズ
MATE WITH : 55560 SERIES,53794 SERIES.
5 テール平坦度は、0.1 MAXIMUM.
TAIL COPLANARITY TO BE 0.1 MAXIMUM.

C	B	A	MATERIAL. NO	極数 CIRCUIT
8.0	7.0	10.1	54722-0301	30
6.5	5.5	8.6	54722-0241	24
6.0	5.0	8.1	54722-0221	22
5.5	4.5	7.6	54722-0201	20
4.5	3.5	6.6	54722-0161	16

MODEL NO. 54722-***1

REV	DESCRIPTION	DRWN:	CH'K:	APPR:
G	REVISED 2002NO. J2003-2517	S.AIHARA '03/03/31	M.SASAO	M.SASAO
F	REVISED 2001NO. J2003-1929	T.YASUI '03/ 1/23	T.ITO	T.ITO
E	REVISED 2000NO. J2003-1468	T.YASUI '02/11/25	T.ITO	T.YAMAGUCHI

MATERIAL 材料: 注記参照 SEE NOTES
FINISH 仕上げ: —//—
WIRE RANGE 適用電線範囲: —//—
INS. RANGE 被覆外径: —//—

GENERAL TOLERANCES: (UNLESS SPECIFIED) 一般公差

10 UNDER 未満	±0.2
10 OVER 以上 30 UNDER 未満	±0.25
30 OVER 以上	±0.3
ANGLE 角度	±3°

SCALE —//—
DESIGN UNITS ☒mm ☐INCH
THIRD ANGLE PROJECTION
DIMENSIONS: ☐mm/INCH ☐INCH/mm ☒mm ONLY
SHT REV
REVISE ON CAD ONLY

DRAWN BY & DATE S.AIHARA '00/10/5
CHECKED BY & DATE M.SASAO '03/03/31
APPROVED BY & DATE M.SASAO '03/03/31

TITLE:
0.5 B-To-B Conn
Rec HOUSING Assy (Hgt=1.5mm)

molex MOLEX INCORPORATED

CAD FILENAME 54722007.S01
MATERIAL NO. SEE CHART
DRAWING NO. SD-54722-007
SHEET NO. 1 OF 2

THIS DRAWING CONTAINS INFORMATION THAT IS PROPRIETARY TO MOLEX INCORPORATED AND SHOULD NOT BE USED WITHOUT WRITTEN PERMISSION.

SIZE B

DWG. NO. SD-54722-007

DO NOT SCALE DRAWING

54722007.S01

EN-02J(097) MXJ-54

DWG. NO. SD-54722-007

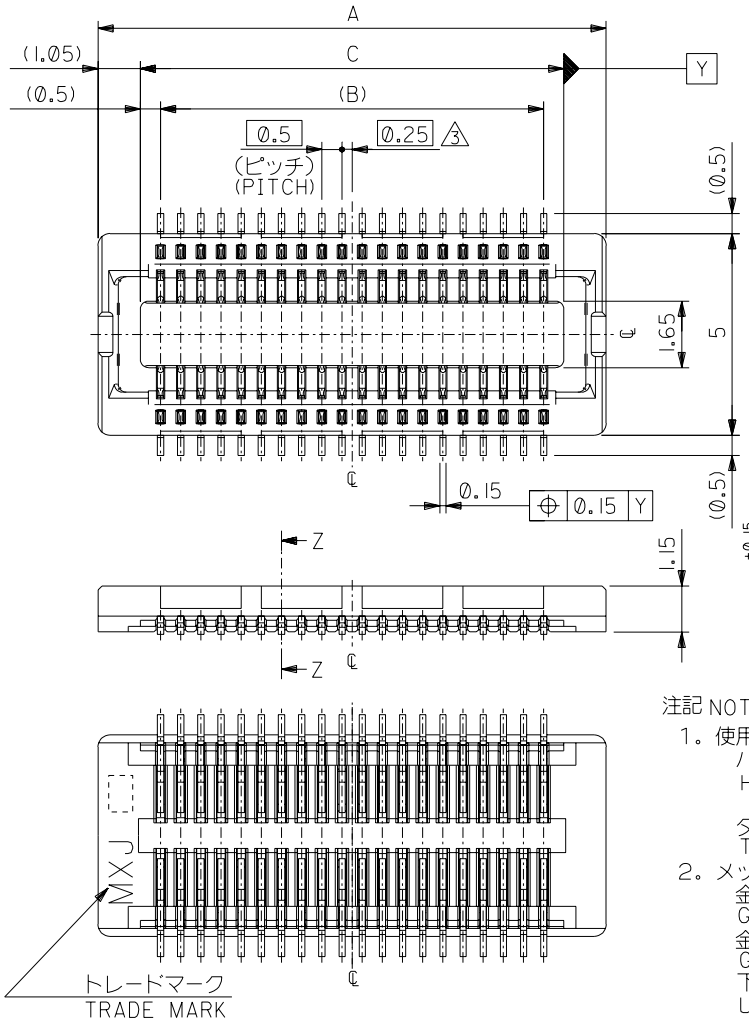

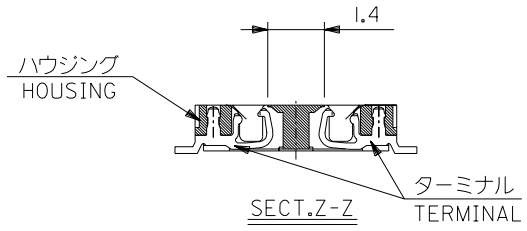

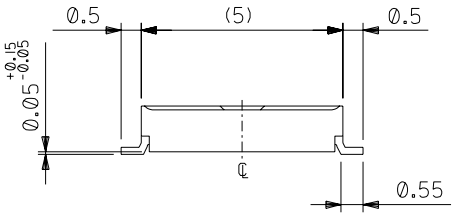

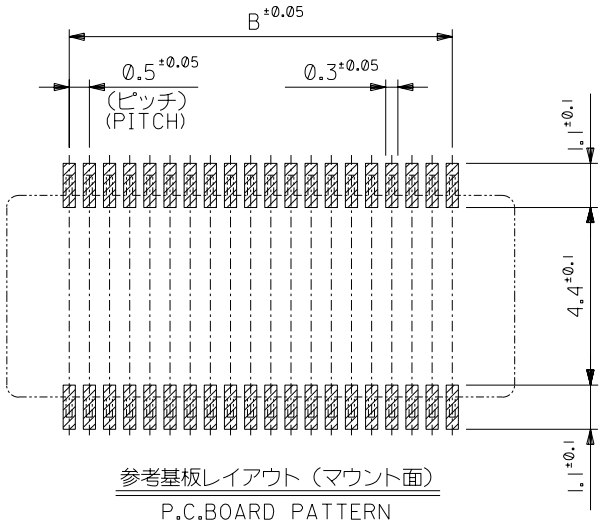

参考基板レイアウト（マウント面）

P.C.BOARD PATTERN
DIMENSION. (REF.)
(MOUNTING AREA)

３４極以上品形状
SHAPE OF 34CIRCUITS OR MORE

注記 NOTES:

1. 使用材料 MATERIAL
   ハウジング：液晶ポリマー　ガラス充填 ,UL94V-0（黒）
   HOUSING:LIQUID CRYSTRAL POLYMER (GLASS FILLED)
   UL94V-0,(COLOR:BLACK)
   ターミナル：リン青銅（t＝0．15）
   TERMINAL:PHOSPHOR BRONZE(t=0.15)
2. メッキ仕様 PLATING
   金メッキ 0.25 MICROMETER MINIMUM（コンタクト部）
   GOLD 0.25 MICROMETER MINIMUM.(CONTACT AREA)
   金メッキ 0.4 MICROMETER MAXIMUM（テール部）
   GOLD 0.4 MICROMETER MAXIMUM.(TAIL AREA)
   下地メッキ：ニッケルメッキ 1.5 MICROMETER MINIMUM
   UNDER PLATING : NICKEL 1.5 MICROMETER MINIMUM

3 （全極数／2）＝偶数の場合に適用。
APPLY FOR (CIRCUIT/2)=EVEN.
4 嵌合相手：55560 シリーズ, 53794 シリーズ
MATE WITH : 55560 SERIES,53794 SERIES.
5 テール平坦度は、0.1 MAXIMUM.
TAIL COPLANARITY TO BE 0.1 MAXIMUM.

C	B	A	MATERIAL. NO	極数 CIRCUIT
20.5	19.5	22.6	54722-0801	80
15.5	14.5	17.6	54722-0601	60
13.0	12.0	15.1	54722-0501	50
12.0	11.0	14.1	54722-0461	46
10.5	9.5	12.6	54722-0401	40
9.0	8.0	11.1	54722-0341	34

MODEL NO. 54722-＊＊＊1

DIMENSIONS: □mm/INCH □INCH/mm ☒mm ONLY

SHT | REV

DO NOT SCALE DRAWING

234NO. DRWN: CH'K: APPR:	233NO. DRWN: CH'K: APPR:	232NO. DRWN: CH'K: APPR:	231NO. DRWN: CH'K: APPR:	REVISED 230NO. J2003-2517 DRWN: S.AIHARA '03/03/31 CH'K: M.SASAO APPR: M.SASAO	DESCRIPTION
				G	REV

MATERIAL 材料: 注記参照 SEE NOTES

FINISH 仕上げ: —//—

WIRE RANGE 適用電線範囲: —//—

INS. RANGE 被覆外径: —//—

GENERAL TOLERANCES: (UNLESS SPECIFIED) 一般公差

10 UNDER 未満	±0.2
10 OVER 以上 30 UNDER 未満	±0.25
30 OVER 以上	±0.3
ANGLE 角度	±3°

SCALE —//—

DESIGN UNITS ☒mm □INCH

THIRD ANGLE PROJECTION

REVISE ON CAD ONLY

DRAWN BY & DATE: S.AIHARA '01/02/13

CHECKED BY & DATE: M.SASAO '03/03/31

APPROVED BY & DATE: M.SASAO '03/03/31

TITLE: 0.5 B-To-B Conn Rec HOUSING Assy (Hgt=1.5mm)

MOLEX INCORPORATED

CAD FILENAME: 54722007.S02

MATERIAL NO.: SEE CHART

DRAWING NO.: SD-54722-007

SHEET NO.: 2 OF 2

THIS DRAWING CONTAINS INFORMATION THAT IS PROPRIETARY TO MOLEX INCORPORATED AND SHOULD NOT BE USED WITHOUT WRITTEN PERMISSION.

SIZE B

54722007.S02

EN-02J(097) MXJ-54

DWG. NO. SD-54722-008

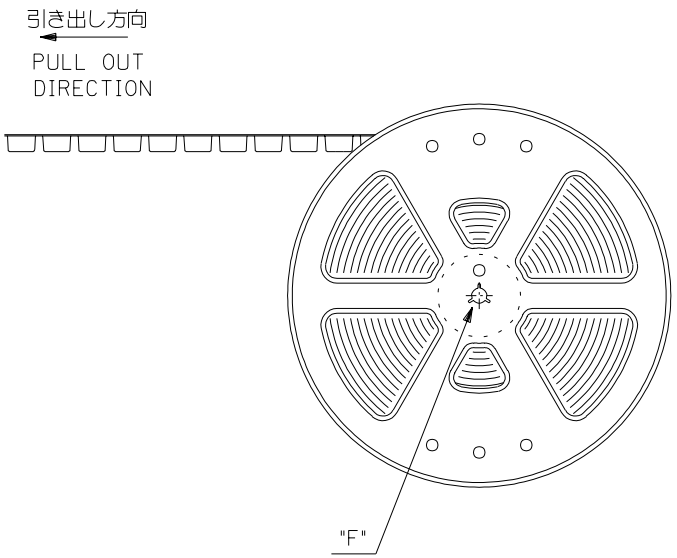

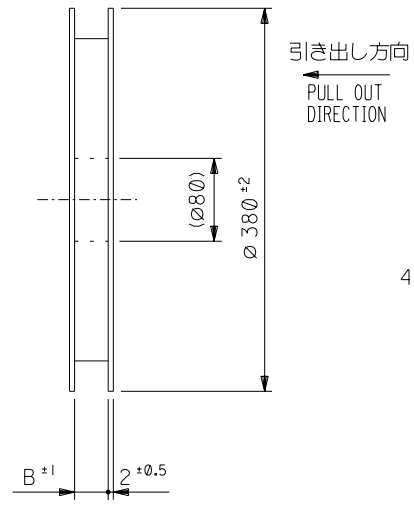

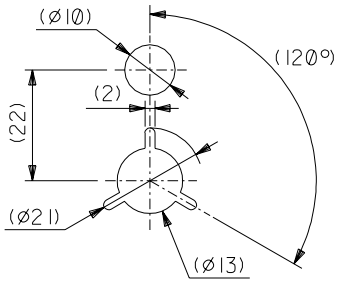

DETAIL "F"

注記 NOTES

1. 製品詳細寸法については図面 SD-54722-007 を参照下さい。
   RE DETAILED DIMENSION, SEE SD-54722-007
2. 梱包数量：３０００個／リール
   NUMBER OF CONNECTORS : 3000PCS/REEL
3. リードテープ長さ LEAD TAPE LENGTH

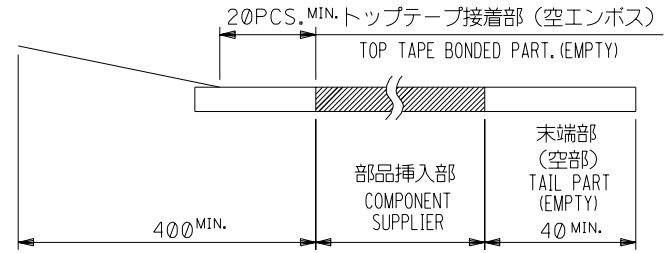

4. トップテープの剥離強度：0.1N ～ 0.7N(10.2gf ～ 71.4gf)
   （剥離方向は下図参照）
   尚、本規格値は出荷時に適用。（但し、輸送時に剥離が発生しないこと。）
   PEELING OFF FORCE OF TOP TAPE : 0.1N ～0.7N(10.2gf ～ 71.4gf)
   (PEELING DIRECTION AS SHOWN IN FOLLOWING FIG,)
   THIS REQUIREMENT SHOULD BE APPLIED AT SHIPMENT.
   PEEL OFF SHOULD NOT BE ALLOWED , DURING TRANSPORTATION.

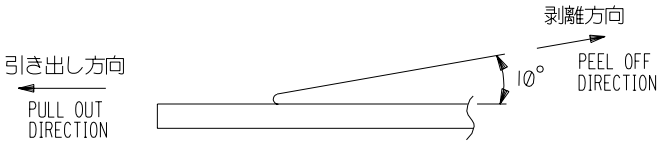

5. 材料　キャリアテープ：ポリプロピレン（ＰＰ）
   トップテープ：ＰＥＴ，ＰＥ，ＰＥＦ
   リール：ポリスチレン（ＰＳ）<リサイクル材を含む>

MATERIAL CARRIER TAPE:POLYPROPYLENE
TOP TAPE:PET,PE,PEF
REEL:POLYSTYRENE(PS)
<RECYCLE MATERIAL CONTAINED>

2034NO. DRWN: CH'K: APPR:	2033NO. DRWN: CH'K: APPR:	REVISED 2032NO. J2003-2517 DRWN: S.AIHARA '03/03/31 CH'K: M.SASAO APPR: M.SASAO	REVISED 2031NO. J2003-1929 DRWN: T.YASUI '03/1/23 CH'K: T.ITO APPR: T.ITO	REVISED 2030NO. J2003-1468 DRWN: T.YASUI '02/11/25 CH'K: T.ITO APPR: T.YAMAGUCHI	DESCRIPTION	MATERIAL 材料 注記参照 SEE NOTES	GENERAL TOLERANCES: (UNLESS SPECIFIED) 一般公差	SCALE -/-	MODEL NO. 54722-***7 DESIGN UNITS ☒mm ☐INCH 2ND ANGLE PROJECTION	DIMENSIONS: ☐mm/INCH ☐INCH/mm ☒mm ONLY	SHT REV 2027 REVISE ON CAD ONLY
						FINISH 仕上げ -/-	10 UNDER 未満 ±0.2	DRAWN BY & DATE S.AIHARA '00/10/ 6	TITLE: 0.5 B-To-B Conn Rec Assy (Hgt=1.5) Embstp Pkg		
						WIRE RANGE 適用電線範囲 -/-	10 OVER 以上 30 UNDER 未満 ±0.25	CHECKED BY & DATE M.SASAO '03/03/31			
						INS. RANGE 被覆外径 -/-	30 OVER 以上 ±0.3	APPROVED BY & DATE M.SASAO '03/03/31	molex MOLEX INCORPORATED		
		G	F	E	REV		ANGLE 角度 ±3°	CAD FILENAME 54722008.S01	MATERIAL NO. SEE CHART	DRAWING NO. SD-54722-008	SHEET NO. 1 OF 5
								2285			SIZE B

THIS DRAWING CONTAINS INFORMATION THAT IS PROPRIETARY TO MOLEX INCORPORATED AND SHOULD NOT BE USED WITHOUT WRITTEN PERMISSION.

DO NOT SCALE DRAWING

54722008.S01

EN-02J(097) MXJ-54

DWG. NO. SD-54722-008

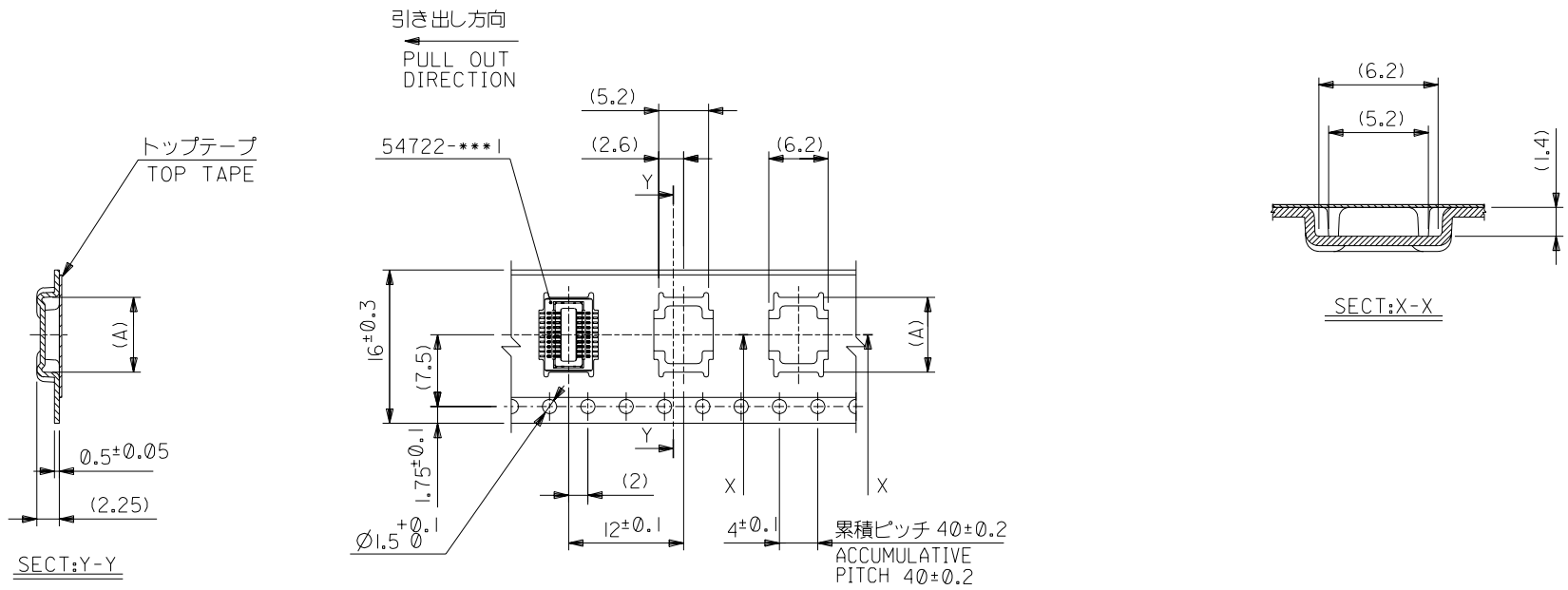

16mm幅キャリアテープ

16mm WIDTH CARRIER TAPE

16	17.5	7.8	54722-0207	20
キャリアテープ幅 CARRIER TAPE WIDTH	B	(A)	MATERIAL NO.	極数 CIRCUIT

MODEL NO. 54722-***7

234NO. DRWN: CH'K: APPR:	233NO. DRWN: CH'K: APPR:	REVISED 232NO. J2003-2517 DRWN: S.AIHARA '03/03/31 CH'K: M.SASAO APPR: M.SASAO	REVISED 231NO. J2003-1929 DRWN: T.YASUI '03/1/23 CH'K: T.ITO APPR: T.ITO	REVISED 230NO. J2003-1468 DRWN: T.YASUI '02/11/25 CH'K: T.ITO APPR: T.YAMAGUCHI
		G	F	E

DESCRIPTION / REV

MATERIAL 材料: SHEET 1 OF 5 参照 REFER TO SHEET 1 OF 5

FINISH 仕上げ: //

WIRE RANGE 適用電線範囲: //

INS. RANGE 被覆外径: //

GENERAL TOLERANCES: (UNLESS SPECIFIED) 一般公差

10 UNDER 未満	±0.2
10 OVER 以上 30 UNDER 未満	±0.25
30 OVER 以上	±0.3
ANGLE 角度	±3°

SCALE: //

DESIGN UNITS: ☒mm ☐INCH

229 THIRD ANGLE PROJECTION

DIMENSIONS: ☐mm/INCH ☐INCH/mm ☒mm ONLY

SHT REV

227 REVISE ON CAD ONLY

DRAWN BY & DATE: S.AIHARA '00/10/ 6

CHECKED BY & DATE: M.SASAO '03/03/31

APPROVED BY & DATE: M.SASAO '03/03/31

TITLE: 0.5 B-To-B Conn Rec Assy (Hgt=1.5) Embstp Pkg

molex MOLEX INCORPORATED

CAD FILENAME: 54722008.S02

MATERIAL NO.: SEE CHART

DRAWING NO.: SD-54722-008

SHEET NO.: 2 OF 5

228 THIS DRAWING CONTAINS INFORMATION THAT IS PROPRIETARY TO MOLEX INCORPORATED AND SHOULD NOT BE USED WITHOUT WRITTEN PERMISSION.

SIZE: B

DO NOT SCALE DRAWING

54722008.S02

EN-02J(097) MXJ-54

DWG. NO. SD-54722-008

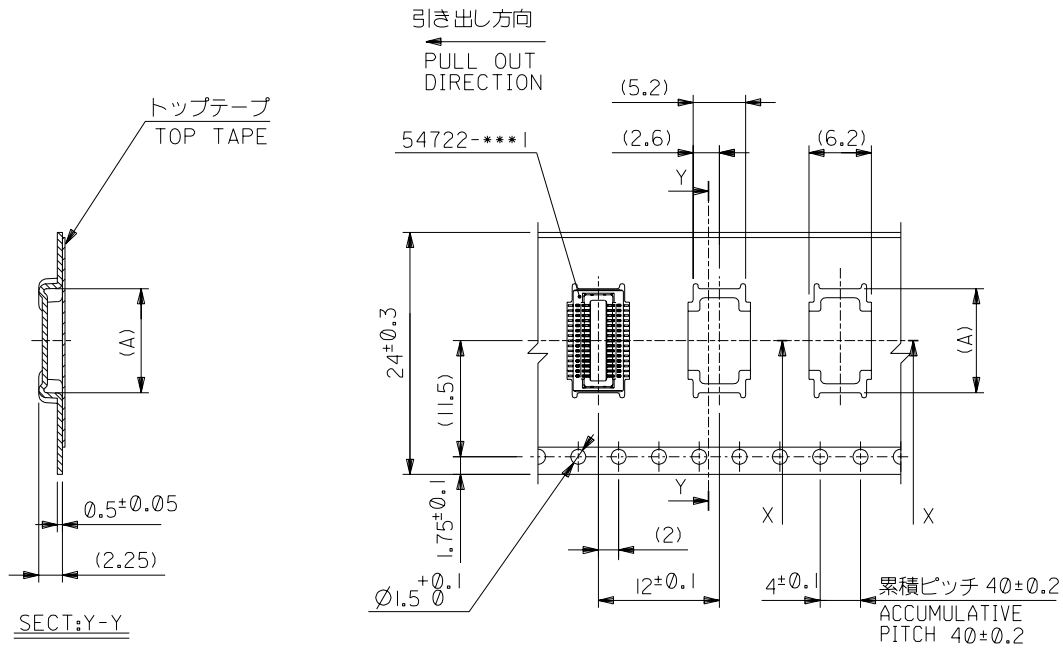

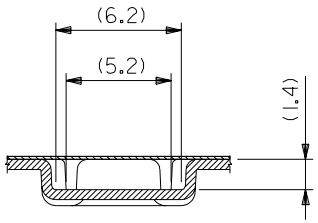

24mm幅キャリアテープ

24mm WIDTH CARRIER TAPE

キャリアテープ幅 CARRIER TAPE WIDTH	B	(A)	MATERIAL NO.	極数 CIRCUIT
24	25.5	15.3	54722-0507	50
		14.3	54722-0467	46
		12.8	54722-0407	40
		11.3	54722-0347	34
		10.3	54722-0307	30
		8.8	54722-0247	24

MODEL NO. 54722-***7

DIMENSIONS: ☐ mm INCH ☐ INCH mm ☒ mm ONLY

SHT REV

REVISE ON CAD ONLY

REV	DESCRIPTION	
G	REVISED 2G2NO. J2003-2517 DRWN: S.AIHARA '03/03/31 CH'K: M.SASAO APPR: M.SASAO	2G3NO. DRWN: CH'K: APPR:
F	REVISED 2G1NO. J2003-1929 DRWN: T.YASUI '03/1/23 CH'K: T.ITO APPR: T.ITO	2G4NO. DRWN: CH'K: APPR:
E	REVISED 2G0NO. J2003-1468 DRWN: T.YASUI '02/11/25 CH'K: T.ITO APPR: T.YAMAGUCHI	

MATERIAL 材料: SHEET 1 OF 5 参照 REFER TO SHEET 1 OF 5

FINISH 仕上げ: //

WIRE RANGE 適用電線範囲: //

INS. RANGE 被覆外径: //

GENERAL TOLERANCES: (UNLESS SPECIFIED) 一般公差

10 UNDER 未満	±0.2
10 OVER 以上 30 UNDER 未満	±0.25
30 OVER 以上	±0.3
ANGLE 角度	±3°

SCALE: //

DESIGN UNITS: ☒mm ☐INCH

THIRD ANGLE PROJECTION

DRAWN BY & DATE: S.AIHARA '00/10/ 6

CHECKED BY & DATE: M.SASAO '03/03/31

APPROVED BY & DATE: M.SASAO '03/03/31

TITLE: 0.5 B-To-B Conn Rec Assy (Hgt=1.5) Embstp Pkg

MOLEX INCORPORATED

CAD FILENAME: 54722008.S03

MATERIAL NO.: SEE CHART

DRAWING NO.: SD-54722-008

SHEET NO.: 3 OF 5

SIZE: B

THIS DRAWING CONTAINS INFORMATION THAT IS PROPRIETARY TO MOLEX INCORPORATED AND SHOULD NOT BE USED WITHOUT WRITTEN PERMISSION.

DO NOT SCALE DRAWING

54722008.S03

EN-02J(097) MXJ-54

DWG. NO. SD-54722-008

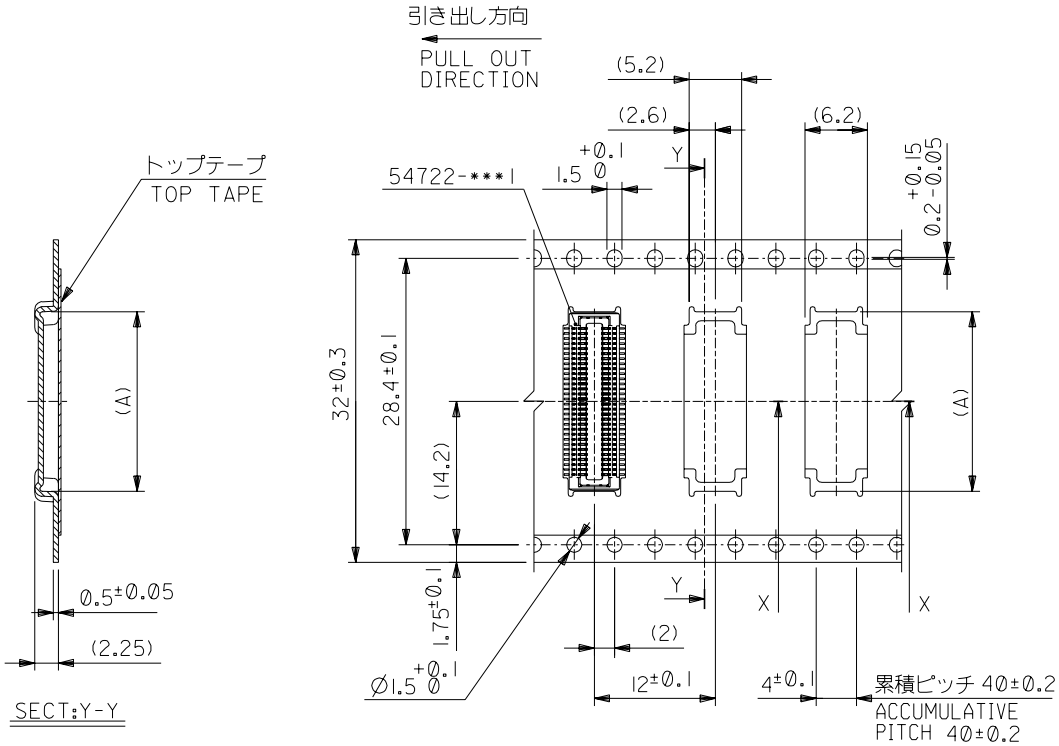

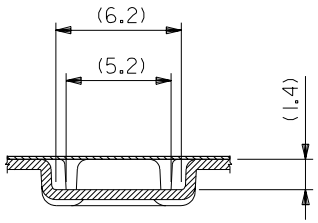

32mm幅キャリアテープ

32mm WIDTH CARRIER TAPE

32	33.5	17.8	54722-0607	60
キャリアテープ幅 CARRIER TAPE WIDTH	B	(A)	MATERIAL NO.	極数 CIRCUIT

MODEL NO. 54722-***7

REV	DESCRIPTION	DRWN	CH'K	APPR
G	REVISED J2003-2517	S.AIHARA '03/03/31	M.SASAO	M.SASAO
F	REVISED J2003-1929	T.YASUI '03/1/23	T.ITO	T.ITO
E	REVISED J2003-1468	T.YASUI '02/11/25	T.ITO	T.YAMAGUCHI

MATERIAL 材料: SHEET 1 OF 5 参照 REFER TO SHEET 1 OF 5

FINISH 仕上げ: //

WIRE RANGE 適用電線範囲: //

INS. RANGE 被覆外径: //

GENERAL TOLERANCES: (UNLESS SPECIFIED) 一般公差

10 UNDER 未満		±0.2
10 OVER 以上	30 UNDER 未満	±0.25
30 OVER 以上		±0.3
ANGLE 角度		±3°

SCALE: //

DESIGN UNITS: ☒mm ☐INCH

THIRD ANGLE PROJECTION

DIMENSIONS: ☐ mm/INCH ☐ INCH/mm ☒ mm ONLY

SHT | REV | REVISE ON CAD ONLY

DRAWN BY & DATE: T.YASUI '02/11/25

CHECKED BY & DATE: M.SASAO '03/03/31

APPROVED BY & DATE: M.SASAO '03/03/31

TITLE: 0.5 B-To-B Conn Rec Assy (Hgt=1.5) Embstp Pkg

MOLEX INCORPORATED

CAD FILENAME: 54722008.S05

MATERIAL NO.: SEE CHART

DRAWING NO.: SD-54722-008

SHEET NO.: 4 OF 5

SIZE: B

THIS DRAWING CONTAINS INFORMATION THAT IS PROPRIETARY TO MOLEX INCORPORATED AND SHOULD NOT BE USED WITHOUT WRITTEN PERMISSION.

DO NOT SCALE DRAWING

54722008.S05

EN-02J(097) MXJ-54

DWG. NO. SD-54722-008

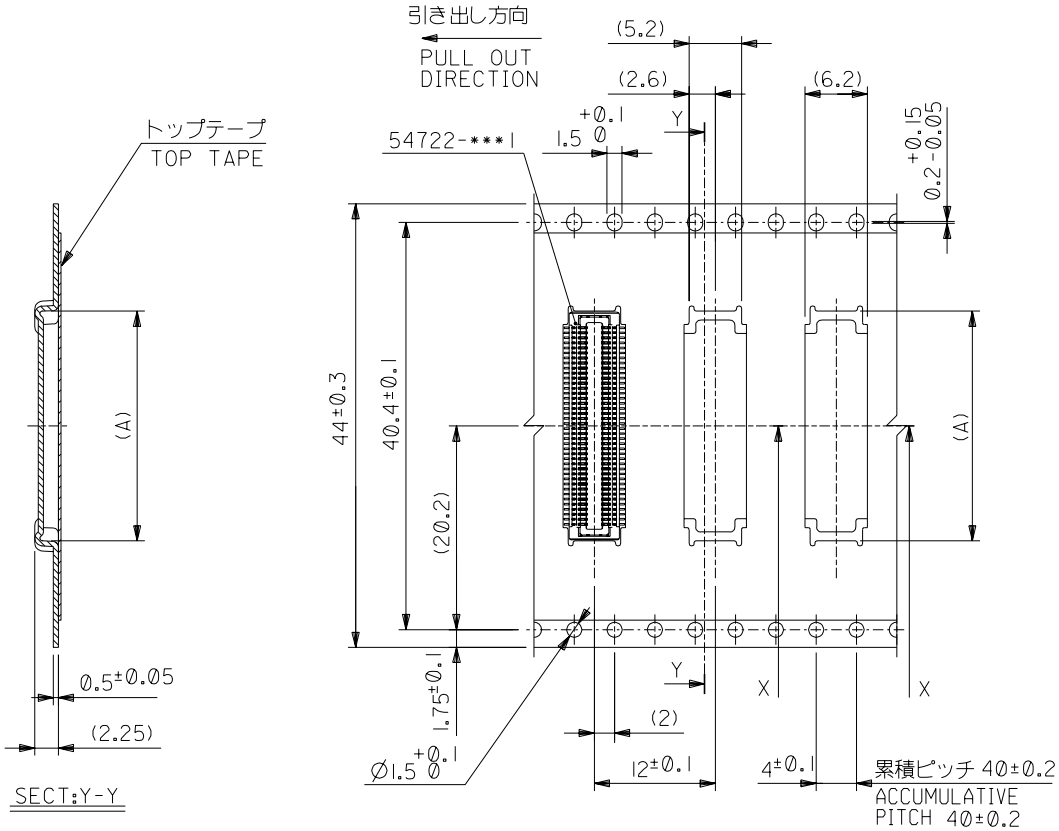

44mm幅キャリアテープ

44mm WIDTH CARRIER TAPE

44	45.5	22.8	54722-0807	80
キャリアテープ幅 CARRIER TAPE WIDTH	B	(A)	MATERIAL NO.	極数 CIRCUIT

MODEL NO. 54722-***7

REV	DESCRIPTION	DRWN	CH'K	APPR
04	NO.	DRWN:	CH'K:	APPR:
03	REVISED NO. J2003-2517	DRWN: S.AIHARA '03/03/31	CH'K: M.SASAO	APPR: M.SASAO
02	REVISED NO. J2003-1929	DRWN: T.YASUI '03/1/23	CH'K: T.ITO	APPR: T.ITO
01	REVISED NO. J2003-1468	DRWN: T.YASUI '02/11/25	CH'K: T.ITO	APPR: T.YAMAGUCHI
00	REVISED NO. J2002-2268	DRWN: T.YASUI '02/03/06	CH'K: T.ITO	APPR: T.YAMAGUCHI

DO NOT SCALE DRAWING

MATERIAL 材料: SHEET 1 OF 5 参照 REFER TO SHEET 1 OF 5

FINISH 仕上げ: //

WIRE RANGE 適用電線範囲: //

INS. RANGE 被覆外径: //

GENERAL TOLERANCES: (UNLESS SPECIFIED) 一般公差

10 UNDER 未満	±0.2
10 OVER 以上 30 UNDER 未満	±0.25
30 OVER 以上	±0.3
ANGLE 角度	±3°

SCALE: //

DESIGN UNITS: ☒mm ☐INCH

THIRD ANGLE PROJECTION

DIMENSIONS: ☐ mm/INCH ☐ INCH/mm ☒ mm ONLY

SHT | REV | REVISE ON CAD ONLY

DRAWN BY & DATE: T.YASUI '02/03/06

CHECKED BY & DATE: M.SASAO '03/03/31

APPROVED BY & DATE: M.SASAO '03/03/31

TITLE: 0.5 B-To-B Conn Rec Assy (Hgt=1.5) Embstp Pkg

molex MOLEX INCORPORATED

CAD FILENAME: 54722008.S04

MATERIAL NO.: SEE CHART

DRAWING NO.: SD-54722-008

SHEET NO.: 5 OF 5

THIS DRAWING CONTAINS INFORMATION THAT IS PROPRIETARY TO MOLEX INCORPORATED AND SHOULD NOT BE USED WITHOUT WRITTEN PERMISSION.

SIZE B

54722008.S04

EN-02J(097) MXJ-54