AVX5046 Receptacle

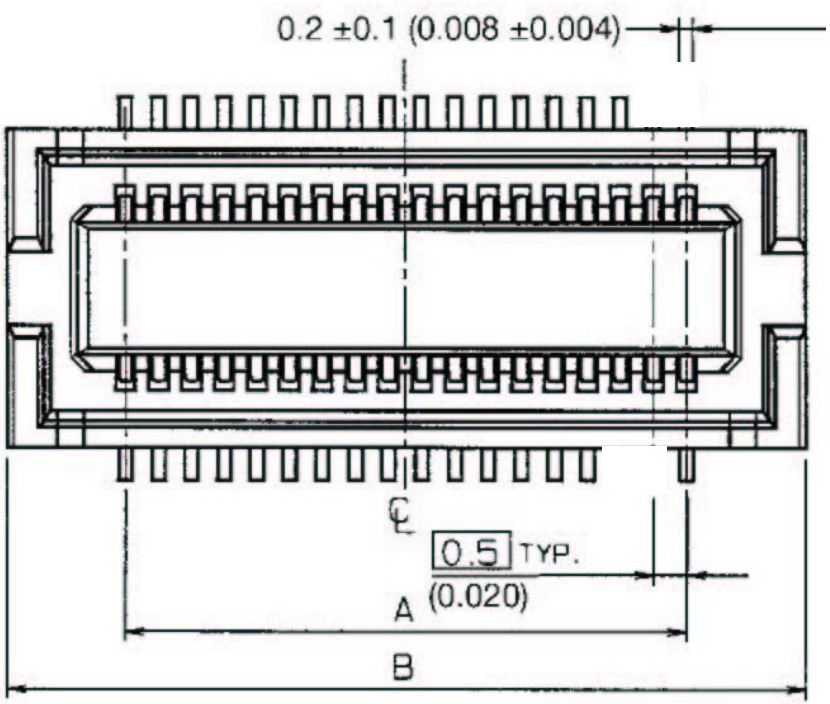

AVX5046 Plug

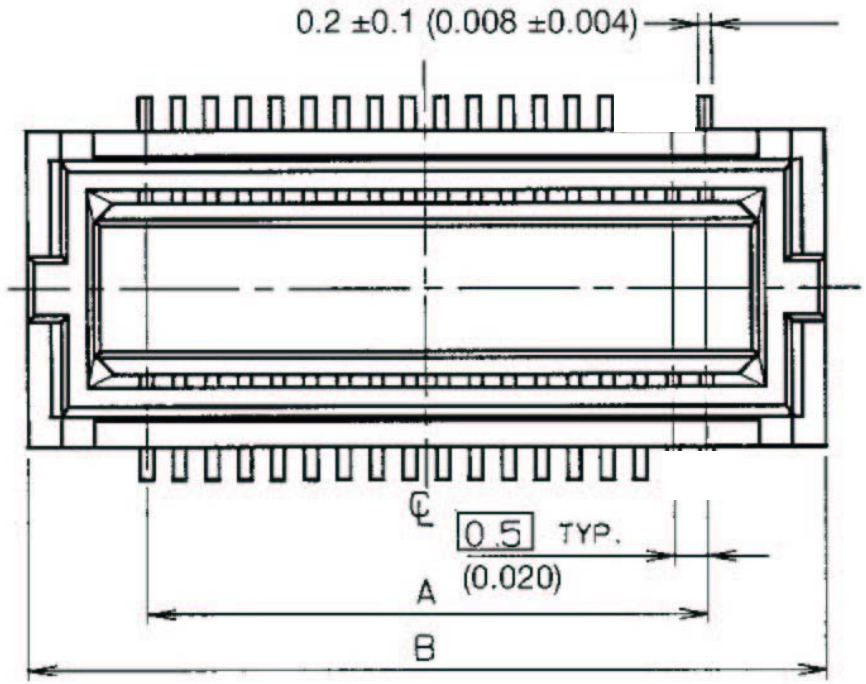

- connectors are symmetric
- connectors will have 50 pins
- connectors have 4 pins removed as shown
- matching pins are removed on plug and receptacle