David L. Huffman
6/5/00 11:34 AM

BLS Crate

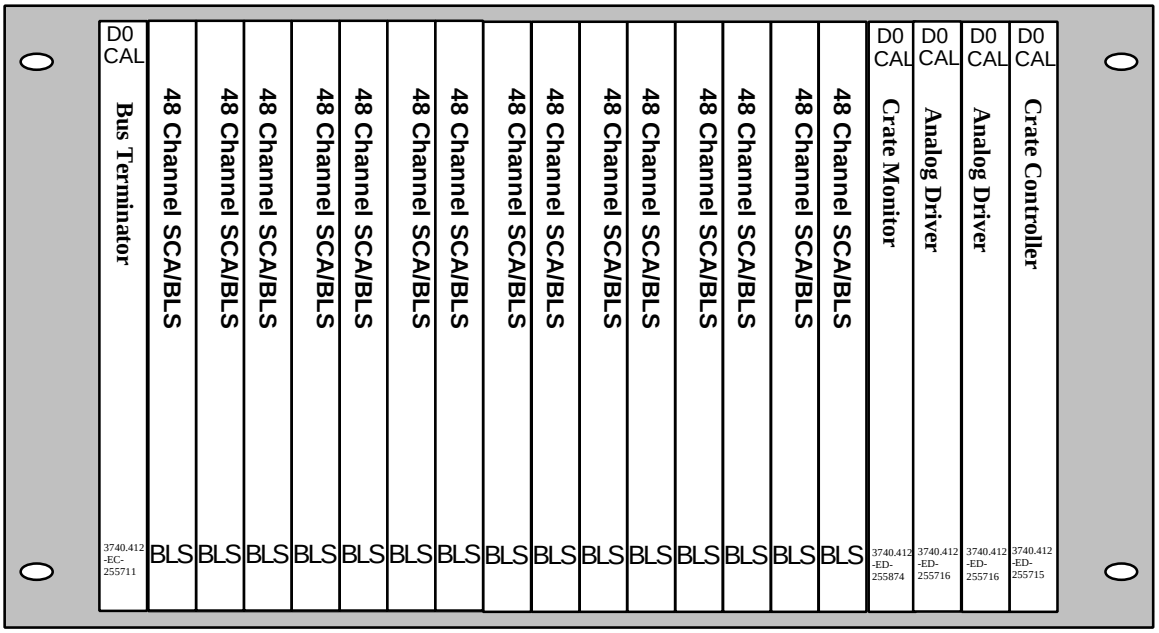

Front View

BLS Crate

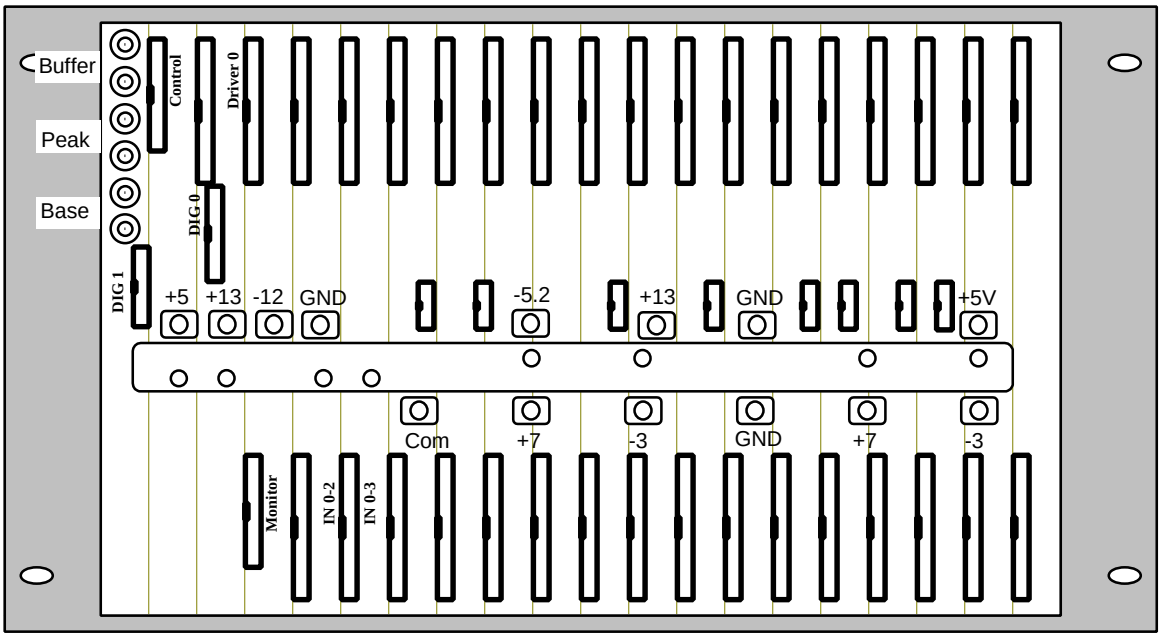

Back View

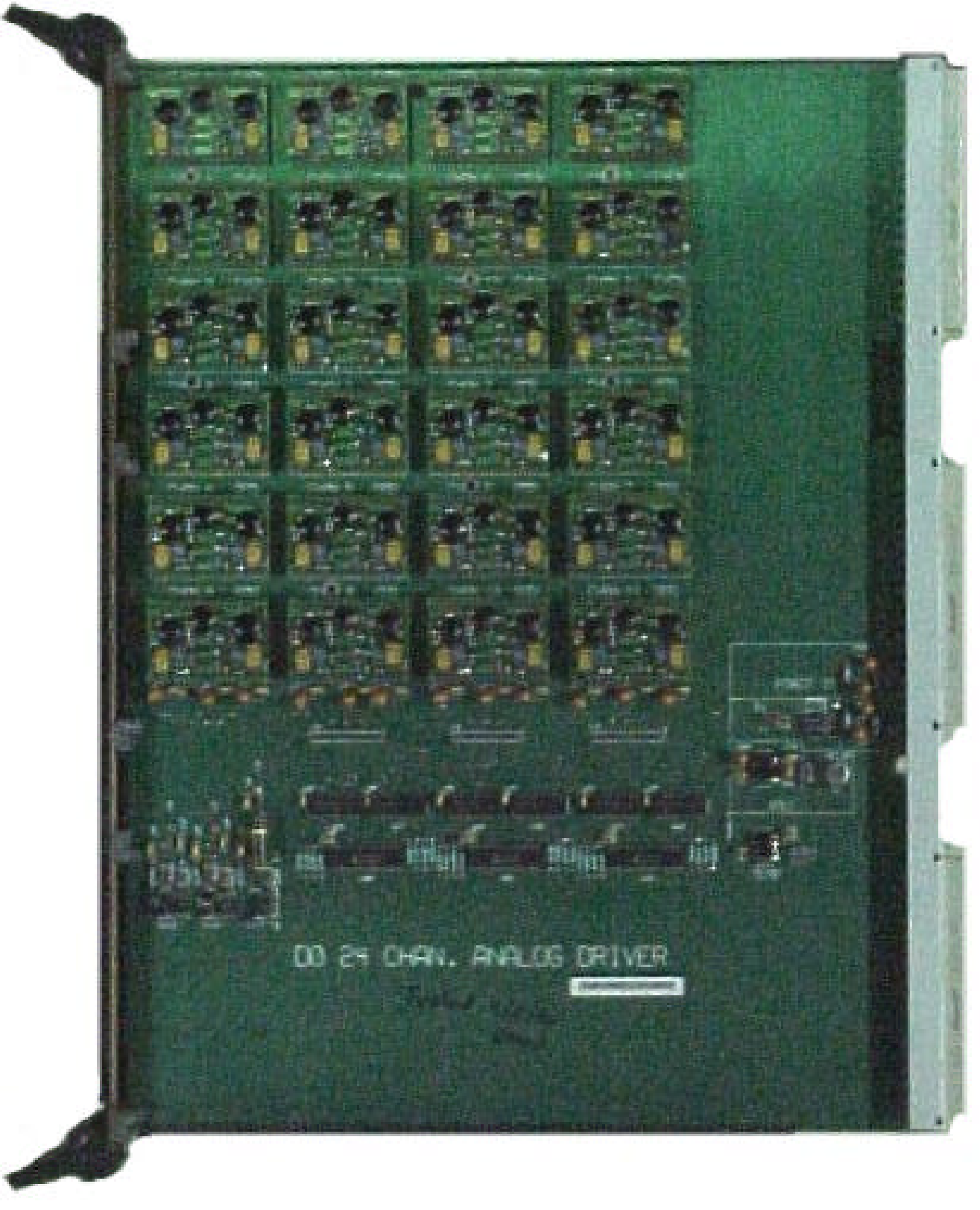
DD 24 CHAN. ANALOG DRIVER

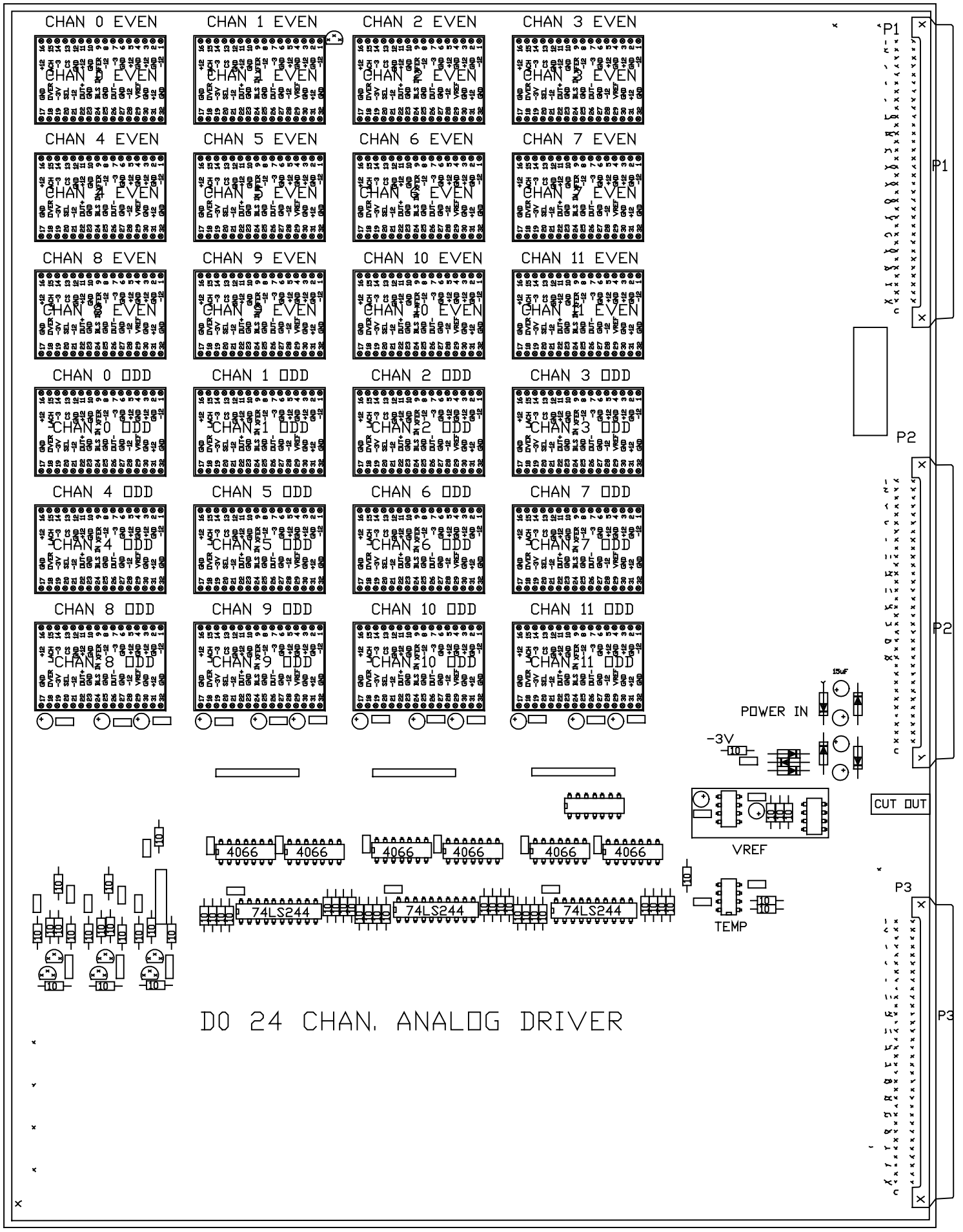

14.437 IN.

D0 ANALOG DRIVER
CDMBA510.DBF
CUSB 2/90 DMW

LAYER ORDER
1
2
3
4
5
6
7
8
9

NEXT PAGE

MISC. FILES
DRILL TARGETS
ASSY DRAWING
FINISHED HOLE SIZES:
A=0.027"
B=0.035"
D=0.110"

SPECIFICATIONS
.062" FR4
SOLDER PLATE FINISH
MUTI LAYER PCB [6]
1X ARTWORK
QUANTITY
SHORT/OPEN TEST

LAYOUT
D.M.WINTER 8-89
CUSB COLLABORATION
CDMBA402.DBF .5MILL RES
CDMBL400.LIB

SHIP TO:
P.M. TUTS
WILSON LAB
DRYDEN ROAD
CORNELL UNIVERSITY
ITHACA, NEW YORK 14853
1-607-255-0937

BILL TO:
RESEARCH FOUNDATION
SUNY AT STONY BROOK
STONY BROOK, N.Y. 11794
ATTN. JOAN NAPOLITANO
1-516-632-8095

ROUTE TO INSIDE

NEXT PAGE

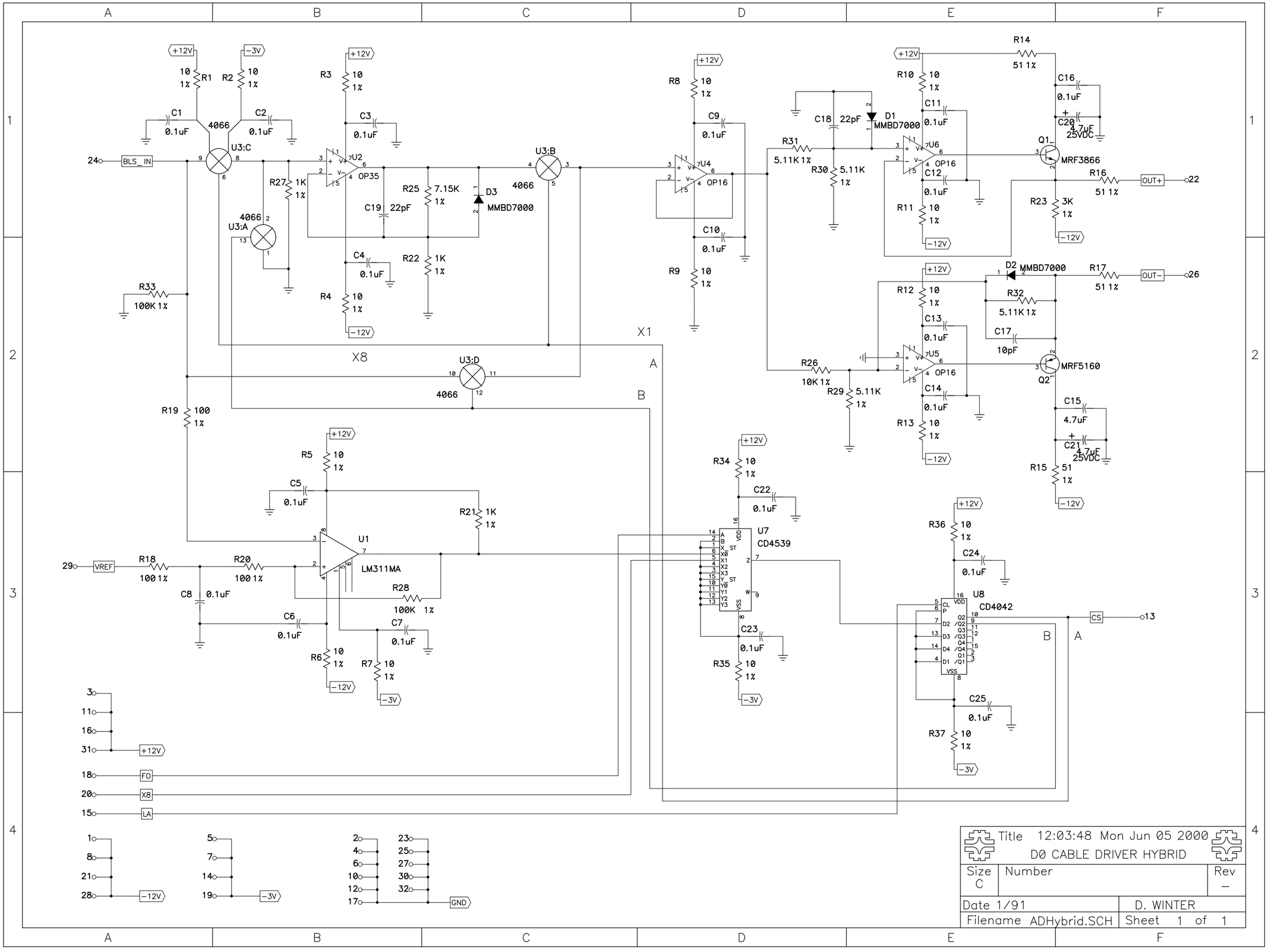
+12V
-3V
R1 10 1%
R2 10 1%
C1 0.1uF
C2 0.1uF
4066
U3:C
24
BLS_IN
R27 1K 1%
4066
U3:A
R33 100K 1%
R3 10 1%
C3 0.1uF
U2
OP35
R25 7.15K 1%
C19 22pF
D3 MMBD7000
C4 0.1uF
R22 1K 1%
R4 10 1%
-12V
U3:B
4066
X8
U3:D
4066
X1
A
B
R19 100 1%
R5 10 1%
C5 0.1uF
R21 1K 1%
U1
LM311MA
29
VREF
R18 100 1%
R20 100 1%
C8 0.1uF
R28 100K 1%
C6 0.1uF
C7 0.1uF
R6 10 1%
R7 10 1%
R8 10 1%
C9 0.1uF
U4
OP16
C10 0.1uF
R9 10 1%
R31 5.11K 1%
R30 5.11K 1%
C18 22pF
D1 MMBD7000
R10 10 1%
C11 0.1uF
U6
OP16
C12 0.1uF
R11 10 1%
R14 51 1%
C16 0.1uF
C20 4.7uF 25VDC
Q1 MRF3866
R16 51 1%
OUT+
22
R23 3K 1%
D2 MMBD7000
R17 51 1%
OUT-
26
R32 5.11K 1%
C17 10pF
R12 10 1%
C13 0.1uF
U5
OP16
R26 10K 1%
R29 5.11K 1%
C14 0.1uF
R13 10 1%
MRF5160
Q2
C15 4.7uF
C21 4.7uF 25VDC
R15 51 1%
R34 10 1%
C22 0.1uF
U7
CD4539
C23 0.1uF
R35 10 1%
R36 10 1%
C24 0.1uF
U8
CD4042
CS
13
C25 0.1uF
R37 10 1%
3
11
16
31
18
FO
20
X8
15
LA
1
8
21
28
5
7
14
19
2
4
6
10
12
17
23
25
27
30
32
GND
Title 12:03:48 Mon Jun 05 2000
D0 CABLE DRIVER HYBRID
Size C
Number
Rev –
Date 1/91
D. WINTER
Filename ADHybrid.SCH
Sheet 1 of 1

NEXT PAGE

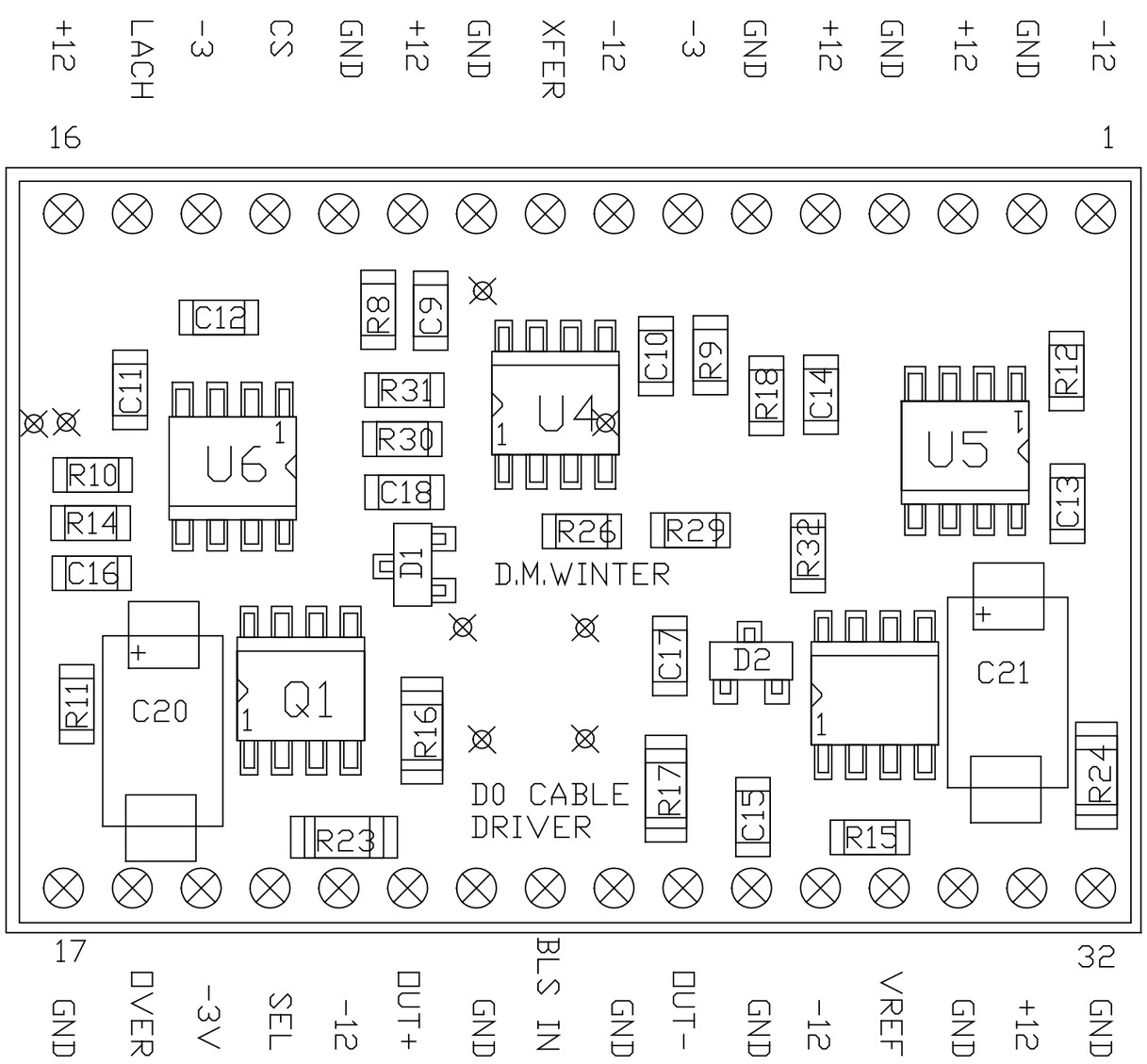

TOP VIEW

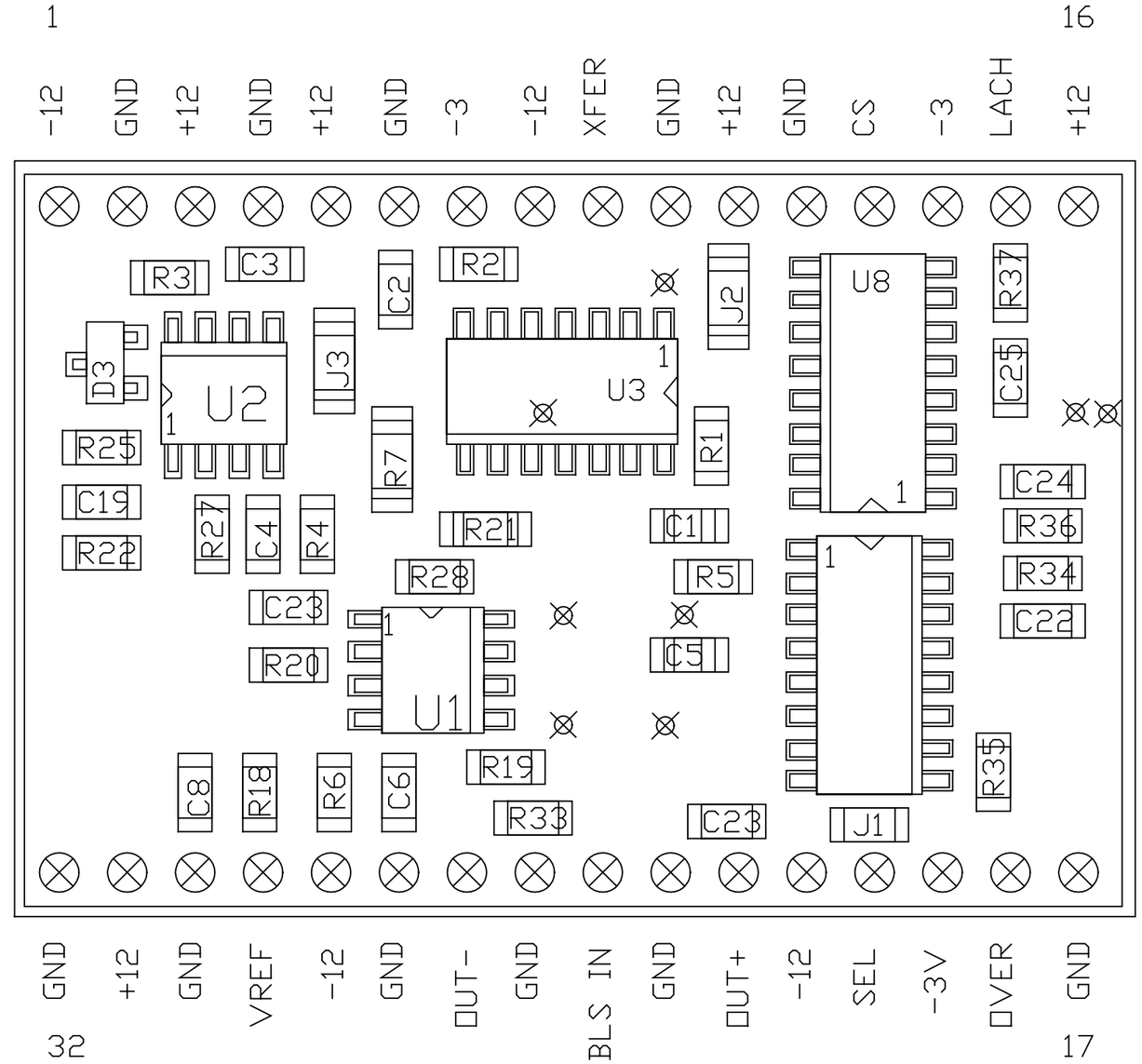

BOTTOM VIEW

DO CABLE DRIVER HYBRID

CDWBA410.DBF

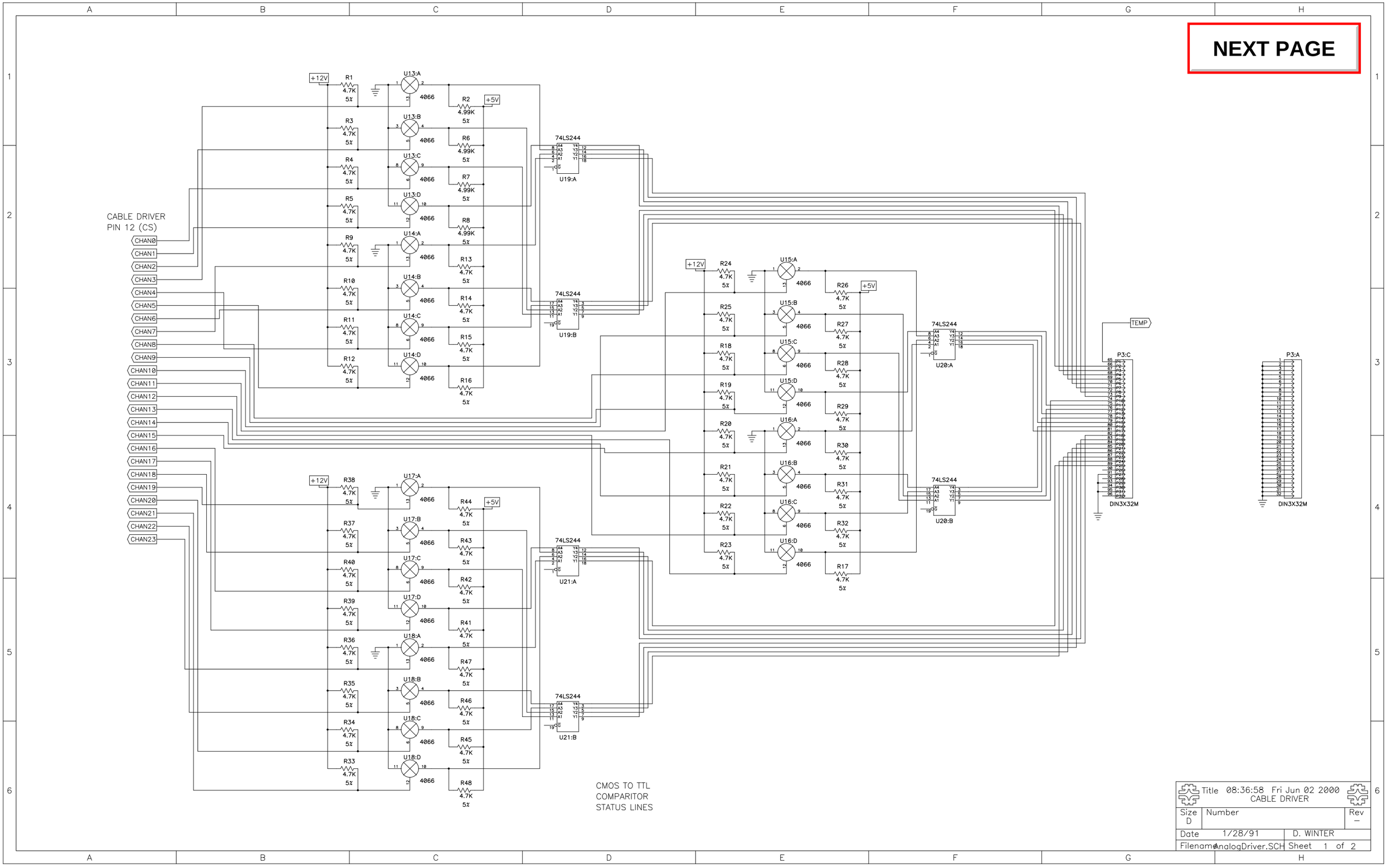
NEXT PAGE
CABLE DRIVER
PIN 12 (CS)
CHAN0
CHAN1
CHAN2
CHAN3
CHAN4
CHAN5
CHAN6
CHAN7
CHAN8
CHAN9
CHAN10
CHAN11
CHAN12
CHAN13
CHAN14
CHAN15
CHAN16
CHAN17
CHAN18
CHAN19
CHAN20
CHAN21
CHAN22
CHAN23
+12V
+5V
74LS244
U19:A
U19:B
U20:A
U20:B
U21:A
U21:B
TEMP
P3:C
P3:A
DIN3X32M
CMOS TO TTL
COMPARITOR
STATUS LINES
Title 08:36:58 Fri Jun 02 2000
CABLE DRIVER
Size D
Number
Rev –
Date 1/28/91
D. WINTER
Filename AnalogDriver.SCH
Sheet 1 of 2

TOP

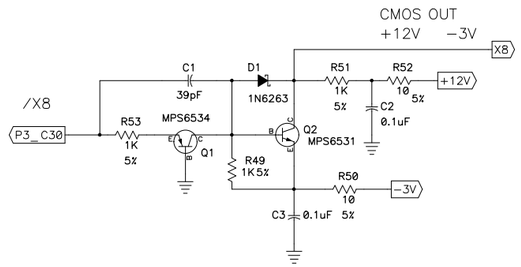

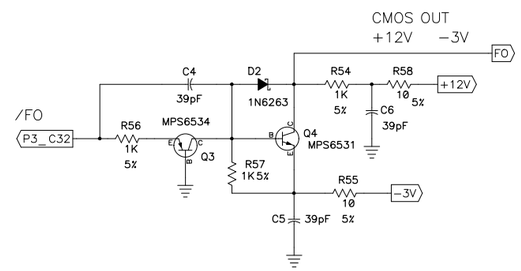

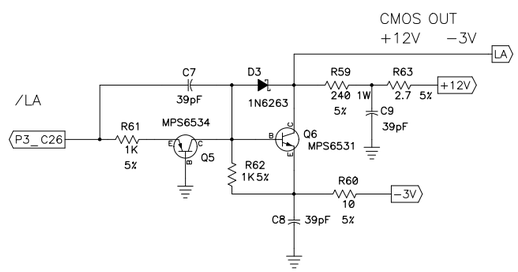

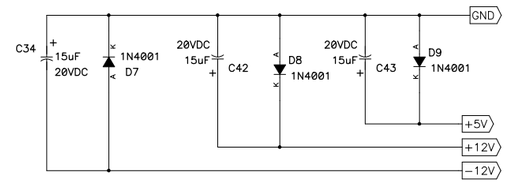

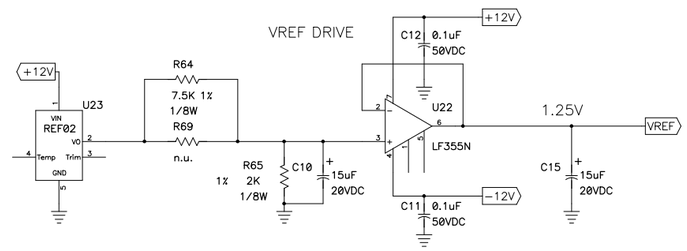

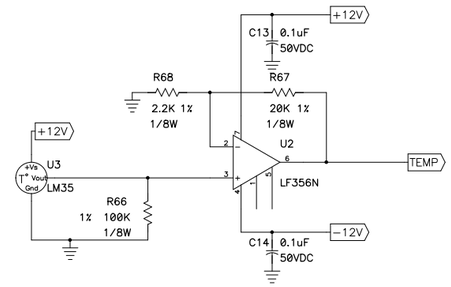

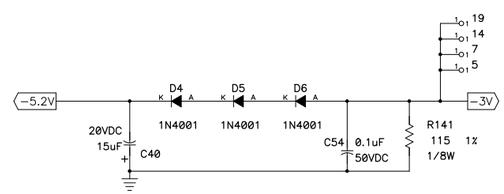

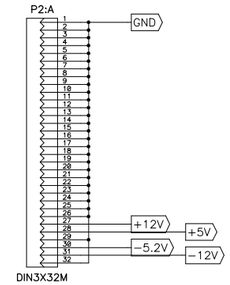

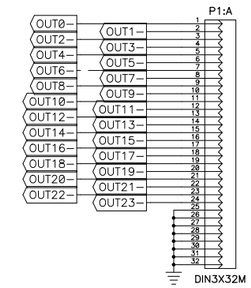

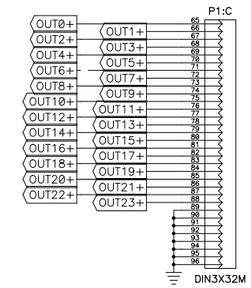

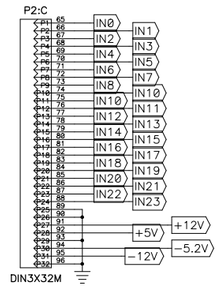

Title	08:37:08 Fri Jun 02 2000 CABLE DRIVER	
Size D	Number	Rev –
Date 1/28/91	D. WINTER	
Filename AnalogDriver.SCH	Sheet 2 of 2	

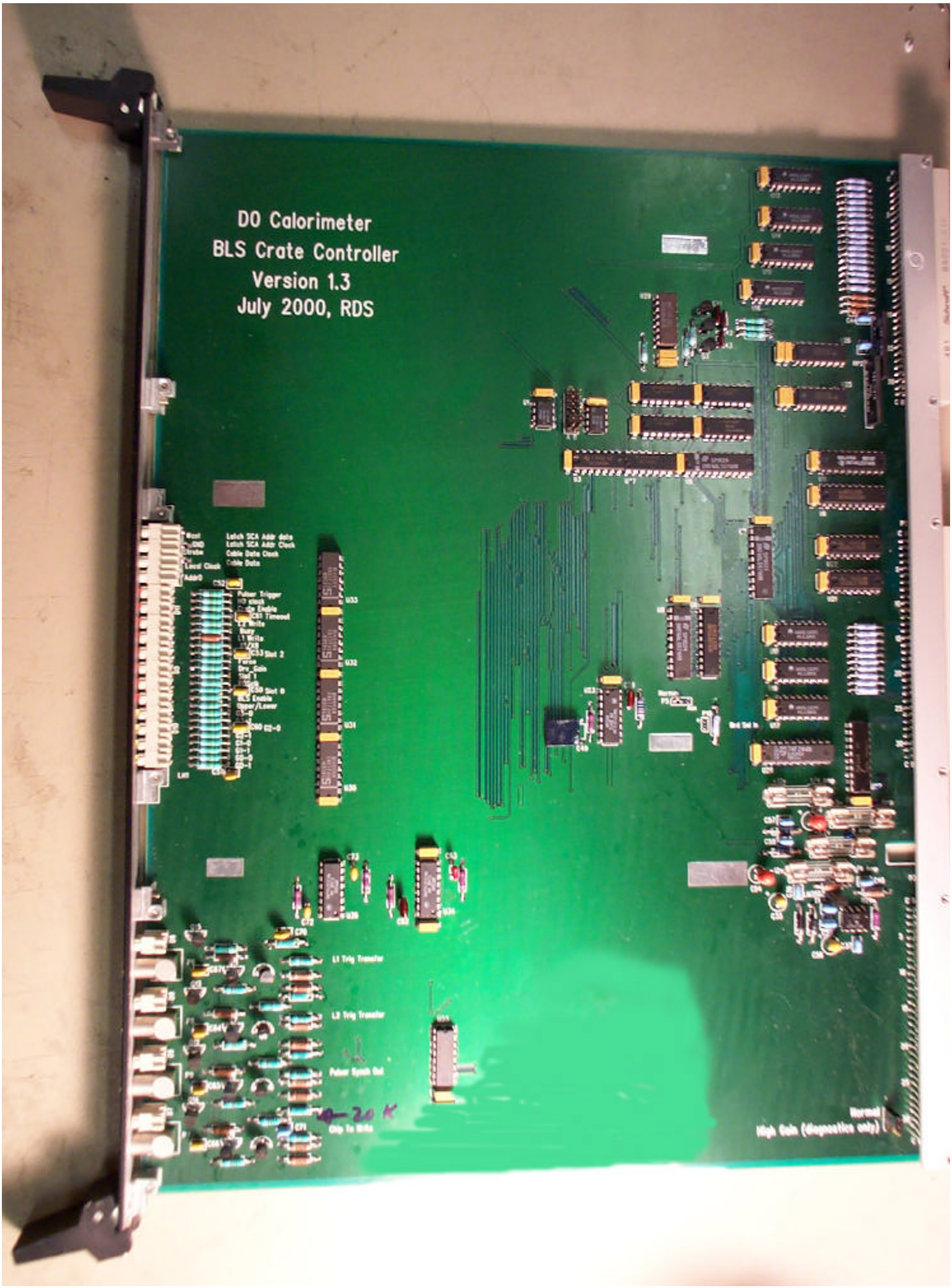
D0 Calorimeter
BLS Crate Controller
Version 1.3
July 2000, RDS
L1 Trig Transfer
L2 Trig Transfer
Normal
High Gain (diagnostics only)

Addr is captured on rising edge Clk
Note: Addr must remain stable for atleast
10 ns after Falling edge of Strobe

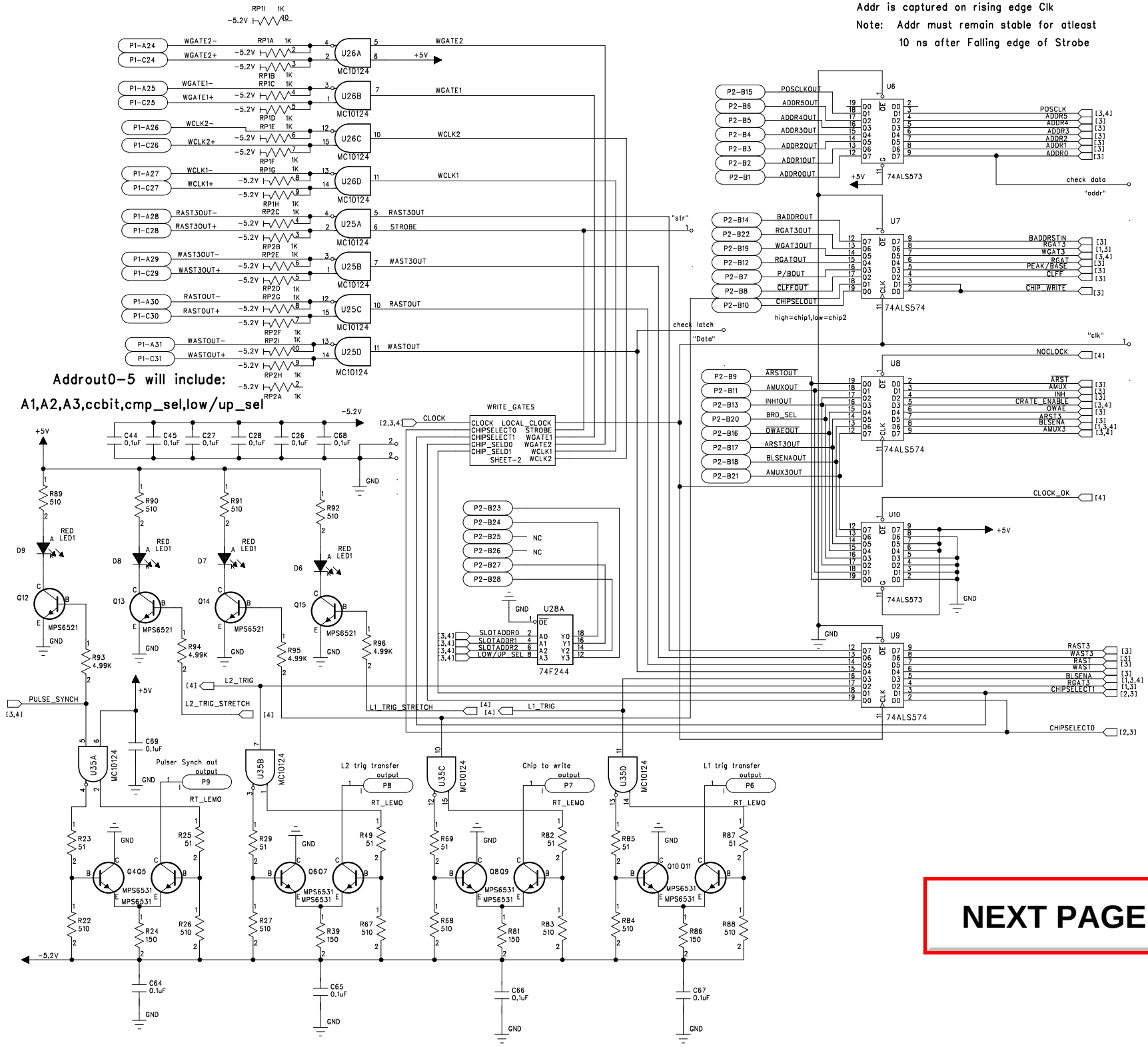

NEXT PAGE

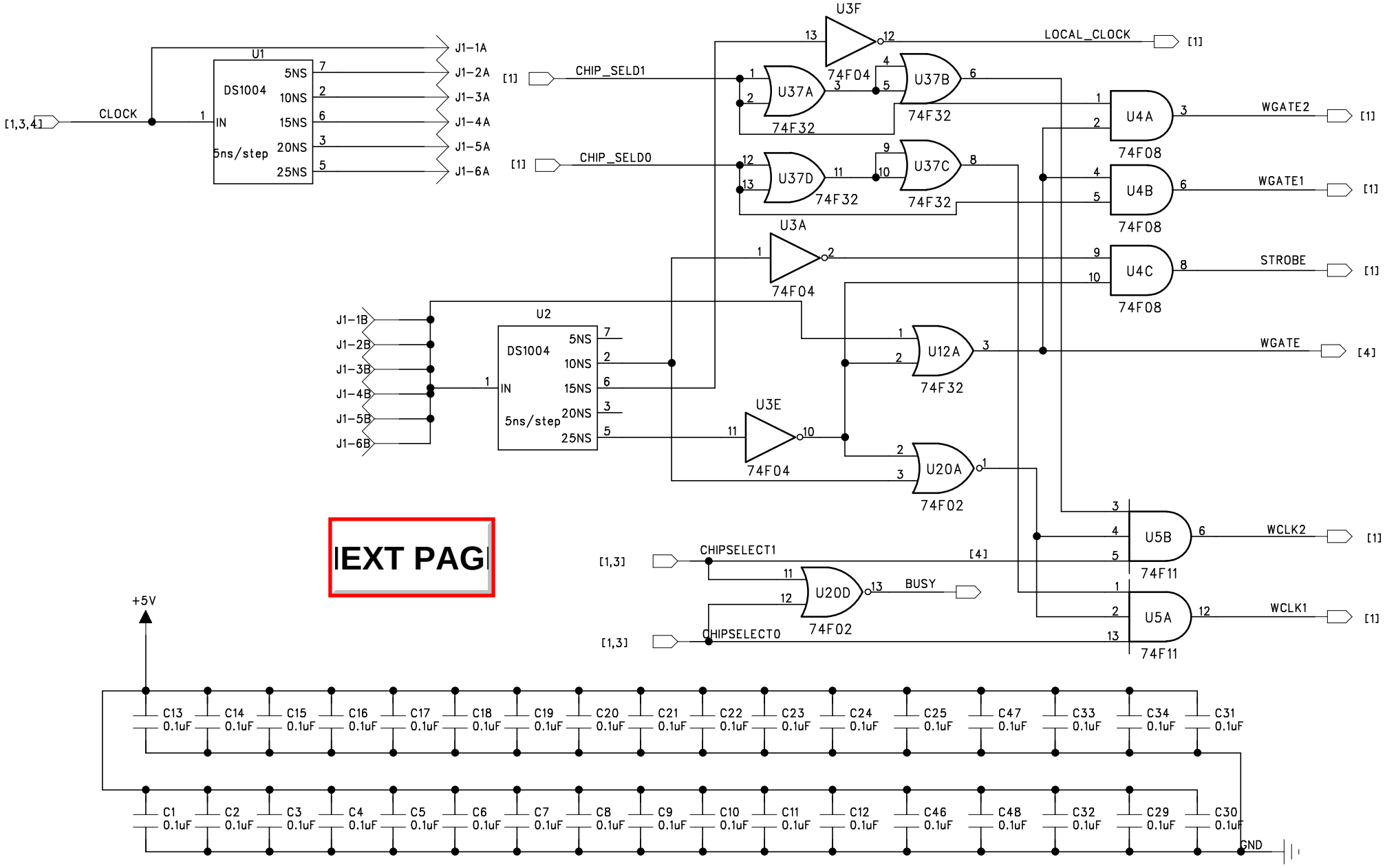
U1
DS1004
IN
5ns/step
5NS
10NS
15NS
20NS
25NS
CLOCK
[1,3,4]
J1-1A
J1-2A
J1-3A
J1-4A
J1-5A
J1-6A
CHIP_SELD1
CHIP_SELD0
[1]
U3F
74F04
U37A
U37B
U37C
U37D
74F32
LOCAL_CLOCK
U4A
U4B
U4C
74F08
WGATE2
WGATE1
STROBE
U3A
U2
J1-1B
J1-2B
J1-3B
J1-4B
J1-5B
J1-6B
U3E
U12A
U20A
74F02
WGATE
[4]
U5B
U5A
74F11
WCLK2
WCLK1
CHIPSELECT1
CHIPSELECT0
U20D
BUSY
[1,3]
+5V
C13 0.1uF
C14 0.1uF
C15 0.1uF
C16 0.1uF
C17 0.1uF
C18 0.1uF
C19 0.1uF
C20 0.1uF
C21 0.1uF
C22 0.1uF
C23 0.1uF
C24 0.1uF
C25 0.1uF
C47 0.1uF
C33 0.1uF
C34 0.1uF
C31 0.1uF
C1 0.1uF
C2 0.1uF
C3 0.1uF
C4 0.1uF
C5 0.1uF
C6 0.1uF
C7 0.1uF
C8 0.1uF
C9 0.1uF
C10 0.1uF
C11 0.1uF
C12 0.1uF
C46 0.1uF
C48 0.1uF
C32 0.1uF
C29 0.1uF
C30 0.1uF
GND

IEXT PAG

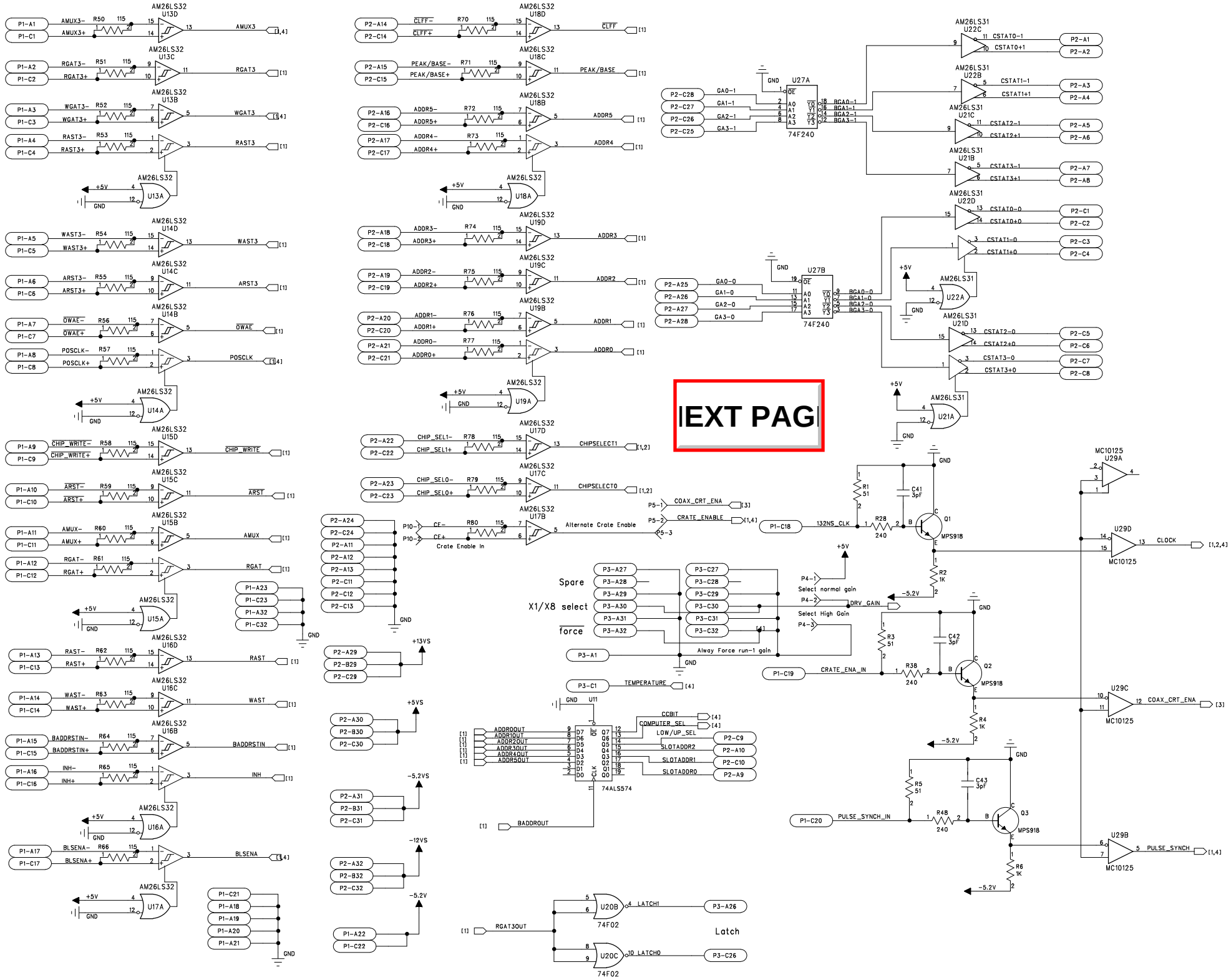
AM26LS32 U13D
P1-A1 AMUX3- R50 115
P1-C1 AMUX3+
AMUX3 [1,4]
AM26LS32 U13C
P1-A2 RGAT3- R51 115
P1-C2 RGAT3+
RGAT3 [1]
AM26LS32 U13B
P1-A3 WGAT3- R52 115
P1-C3 WGAT3+
WGAT3 [1,4]
P1-A4 RAST3- R53 115
P1-C4 RAST3+
RAST3 [1]
AM26LS32 U13A
+5V
GND
AM26LS32 U14D
P1-A5 WAST3- R54 115
P1-C5 WAST3+
WAST3 [1]
AM26LS32 U14C
P1-A6 ARST3- R55 115
P1-C6 ARST3+
ARST3 [1]
AM26LS32 U14B
P1-A7 OWAE- R56 115
P1-C7 OWAE+
OWAE [1]
P1-A8 POSCLK- R57 115
P1-C8 POSCLK+
POSCLK [1,4]
AM26LS32 U14A
AM26LS32 U15D
P1-A9 CHIP_WRITE- R58 115
P1-C9 CHIP_WRITE+
CHIP_WRITE [1]
AM26LS32 U15C
P1-A10 ARST- R59 115
P1-C10 ARST+
ARST [1]
AM26LS32 U15B
P1-A11 AMUX- R60 115
P1-C11 AMUX+
AMUX [1]
P1-A12 RGAT- R61 115
P1-C12 RGAT+
RGAT [1]
AM26LS32 U15A
P1-A23
P1-C23
P1-A32
P1-C32
AM26LS32 U16D
P1-A13 RAST- R62 115
P1-C13 RAST+
RAST [1]
AM26LS32 U16C
P1-A14 WAST- R63 115
P1-C14 WAST+
WAST [1]
AM26LS32 U16B
P1-A15 BADDRSTIN- R64 115
P1-C15 BADDRSTIN+
BADDRSTIN [1]
P1-A16 INH- R65 115
P1-C16 INH+
INH [1]
AM26LS32 U16A
P1-A17 BLSENA- R66 115
P1-C17 BLSENA+
BLSENA [1,4]
AM26LS32 U17A
P1-A21
P1-A18
P1-A19
P1-A20
P1-A21
P2-A24
P2-C24
P2-A11
P2-A12
P2-A13
P2-C11
P2-C12
P2-C13
P2-A29
P2-B29
P2-C29
+13VS
P2-A30
P2-B30
P2-C30
+5VS
P2-A31
P2-B31
P2-C31
-5.2VS
P2-A32
P2-B32
P2-C32
-12VS
P1-A22
P1-C22
-5.2V
AM26LS32 U18D
P2-A14 CLFF- R70 115
P2-C14 CLFF+
CLFF [1]
AM26LS32 U18C
P2-A15 PEAK/BASE- R71 115
P2-C15 PEAK/BASE+
PEAK/BASE [1]
AM26LS32 U18B
P2-A16 ADDR5- R72 115
P2-C16 ADDR5+
ADDR5 [1]
P2-A17 ADDR4- R73 115
P2-C17 ADDR4+
ADDR4 [1]
AM26LS32 U18A
AM26LS32 U19D
P2-A18 ADDR3- R74 115
P2-C18 ADDR3+
ADDR3 [1]
AM26LS32 U19C
P2-A19 ADDR2- R75 115
P2-C19 ADDR2+
ADDR2 [1]
AM26LS32 U19B
P2-A20 ADDR1- R76 115
P2-C20 ADDR1+
ADDR1 [1]
P2-A21 ADDR0- R77 115
P2-C21 ADDR0+
ADDR0 [1]
AM26LS32 U19A
AM26LS32 U17D
P2-A22 CHIP_SEL1- R78 115
P2-C22 CHIP_SEL1+
CHIPSELECT1 [1,2]
AM26LS32 U17C
P2-A23 CHIP_SEL0- R79 115
P2-C23 CHIP_SEL0+
CHIPSELECT0 [1,2]
AM26LS32 U17B
P10-1 CE- R80 115
P10-2 CE+
Crate Enable In
Alternate Crate Enable
P5-1 COAX_CRT_ENA [3]
P5-2 CRATE_ENABLE [1,4]
P5-3
AM26LS31 U22C
P2-C28 GA0-1
P2-C27 GA1-1
P2-C26 GA2-1
P2-C25 GA3-1
U27A 74F240
RGA0-1 RGA1-1 RGA2-1 RGA3-1
CSTAT0-1 CSTAT0+1
P2-A1 P2-A2
AM26LS31 U22B
CSTAT1-1 CSTAT1+1
P2-A3 P2-A4
AM26LS31 U21C
CSTAT2-1 CSTAT2+1
P2-A5 P2-A6
AM26LS31 U21B
CSTAT3-1 CSTAT3+1
P2-A7 P2-A8
AM26LS31 U22D
CSTAT0-0 CSTAT0+0
P2-C1 P2-C2
CSTAT1-0 CSTAT1+0
P2-C3 P2-C4
AM26LS31 U22A
P2-A25 GA0-0
P2-A26 GA1-0
P2-A27 GA2-0
P2-A28 GA3-0
U27B 74F240
RGA0-0 RGA1-0 RGA2-0 RGA3-0
AM26LS31 U21D
CSTAT2-0 CSTAT2+0
P2-C5 P2-C6
CSTAT3-0 CSTAT3+0
P2-C7 P2-C8
AM26LS31 U21A
NEXT PAGE
Spare
X1/X8 select
force
P3-A27 P3-A28 P3-A29 P3-A30 P3-A31 P3-A32
P3-C27 P3-C28 P3-C29 P3-C30 P3-C31 P3-C32
P4-1 Select normal gain
P4-2 DRV_GAIN
P4-3 Select High Gain
Always Force run-1 gain
P3-A1
P3-C1 TEMPERATURE [4]
P1-C18 132NS_CLK
R1 51
C41 3pF
R28 240
Q1 MPS918
R2 1K
-5.2V
P1-C19 CRATE_ENA_IN
R38 240
R3 51
C42 3pF
Q2 MPS918
R4 1K
P1-C20 PULSE_SYNCH_IN
R48 240
R5 51
C43 3pF
Q3 MPS918
R6 1K
MC10125 U29A
U29D MC10125
CLOCK [1,2,4]
U29C MC10125
COAX_CRT_ENA [3]
U29B MC10125
PULSE_SYNCH [1,4]
U11 74ALS574
ADDR0OUT ADDR1OUT ADDR2OUT ADDR3OUT ADDR4OUT ADDR5OUT
CCBIT [4]
COMPUTER_SEL [4]
LOW/UP_SEL
SLOTADDR2 SLOTADDR1 SLOTADDR0
P2-C9 P2-A10 P2-C10 P2-A9
BADDROUT
U20B 74F02
U20C 74F02
RGAT3OUT
LATCH1 LATCH0
P3-A26 P3-C26
Latch

TOP

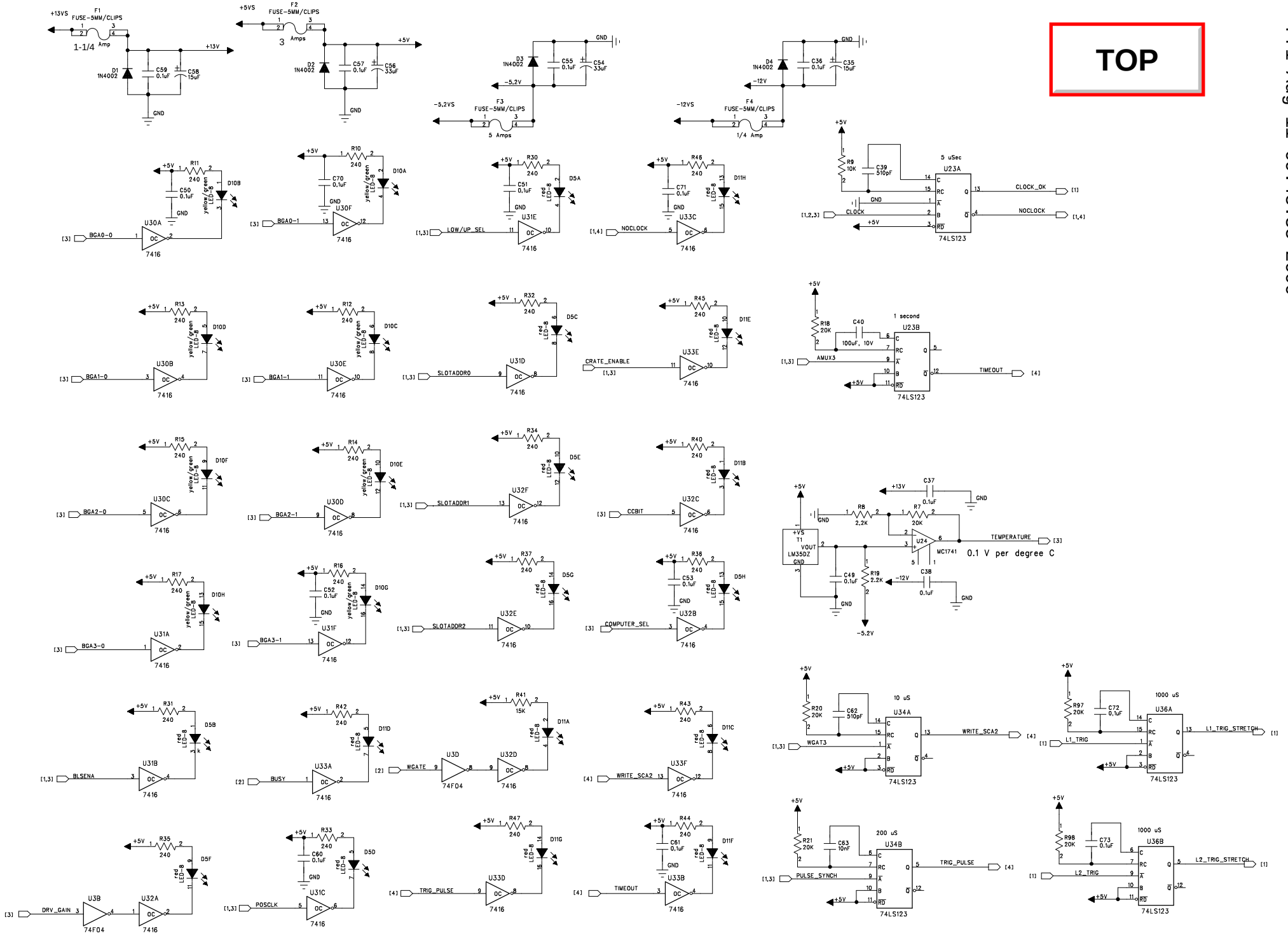
+13VS
F1
FUSE-5MM/CLIPS
1-1/4 Amp
+13V
D1
1N4002
C59
0.1uF
C58
15uF
GND
+5VS
F2
FUSE-5MM/CLIPS
3 Amps
+5V
D2
1N4002
C57
0.1uF
C56
33uF
-5.2VS
F3
FUSE-5MM/CLIPS
5 Amps
-5.2V
D3
1N4002
C55
0.1uF
C54
33uF
-12VS
F4
FUSE-5MM/CLIPS
1/4 Amp
-12V
D4
1N4002
C36
0.1uF
C35
15uF
R9
10K
C39
510pF
5 uSec
U23A
74LS123
CLOCK
CLOCK_OK
NOCLOCK
R18
20K
C40
100uF, 10V
1 second
U23B
AMUX3
TIMEOUT
R8
2.2K
R7
20K
C37
0.1uF
U24
MC1741
TEMPERATURE
0.1 V per degree C
T1
LM35DZ
VOUT
C49
0.1uF
R19
2.2K
C38
0.1uF
R20
20K
C62
510pF
10 uS
U34A
WGAT3
WRITE_SCA2
R97
20K
C72
0.1uF
1000 uS
U36A
L1_TRIG
L1_TRIG_STRETCH
R21
20K
C63
10nF
200 uS
U34B
PULSE_SYNCH
TRIG_PULSE
R98
20K
C73
0.1uF
U36B
L2_TRIG
L2_TRIG_STRETCH
R11
240
C50
0.1uF
D10B
U30A
BGA0-0
R10
240
C70
0.1uF
D10A
U30F
BGA0-1
R30
240
C51
0.1uF
D5A
U31E
LOW/UP_SEL
R46
240
C71
0.1uF
D11H
U33C
NOCLOCK
R13
240
D10D
U30B
BGA1-0
R12
240
D10C
U30E
BGA1-1
R32
240
D5C
U31D
SLOTADDR0
R45
240
D11E
U33E
CRATE_ENABLE
R15
240
D10F
U30C
BGA2-0
R14
240
D10E
U30D
BGA2-1
R34
240
D5E
U32F
SLOTADDR1
R40
240
D11B
U32C
CCBIT
R17
240
D10H
U31A
BGA3-0
R16
240
C52
0.1uF
D10G
U31F
BGA3-1
R37
240
D5G
U32E
SLOTADDR2
R36
240
C53
0.1uF
D5H
U32B
COMPUTER_SEL
R31
240
D5B
U31B
BLSENA
R42
240
D11D
U33A
BUSY
R41
15K
D11A
U3D
WGATE
74F04
U32D
R43
240
D11C
U33F
WRITE_SCA2
R35
240
D5F
U3B
DRV_GAIN
U32A
R33
240
C60
0.1uF
D5D
U31C
POSCLK
R47
240
D11G
U33D
TRIG_PULSE
R44
240
C61
0.1uF
D11F
U33B
TIMEOUT
7416

Schematic Diagram

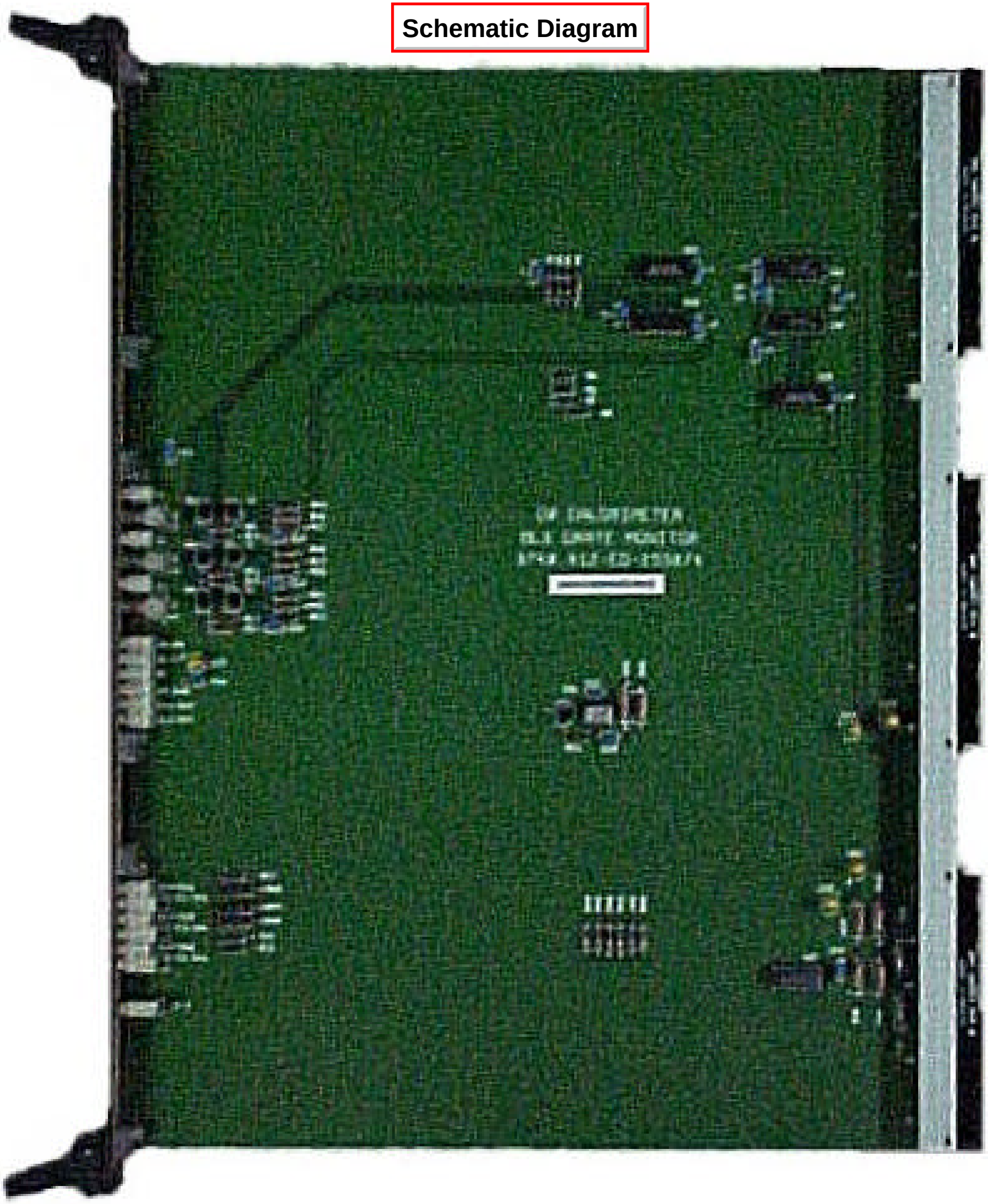

REV.	DESCRIPTION	DRAWN	DATE
		APPD.	DATE
A	CONVERTED TO AUTOCAD	A. KNUDSEN	5/22/00

TOP

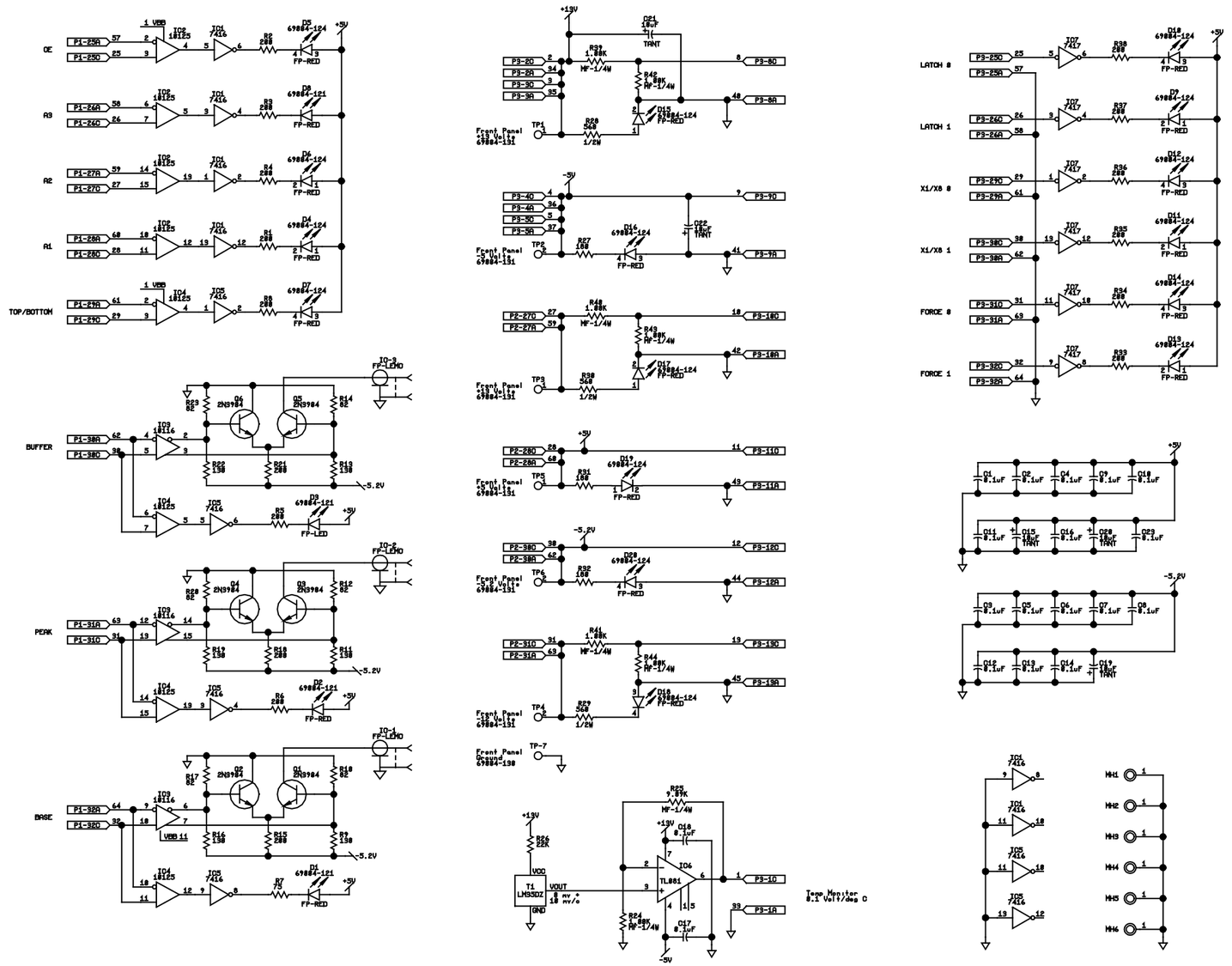

NOTES:

1. ALL RESISTORS ARE ALLEN-BRADLEY, 1/4 WATT, ±5 , HOT-MOLDED FIXED RESISTORS UNLESS OTHERWISE NOTED.
2. RESISTORS MARKED 1/2W ARE ALLEN-BRADLEY, 1/2 WATT, ±5 , HOT-MOLDED FIXED RESISTORS.
3. RESISTORS MARKED MF-1/4W ARE DALE, 1/4 WATT, ±1 , 100ppm/o, METAL FILM RESISTORS.
4. PARTS WITH DESIGNATORS MH1 THROUGH MH6 ARE FRONT PANEL MOUNTING HOLES. THESE HOLES ALLOW THE FRONT PANEL TO BE GROUNDED.

PRINTED CIRCUIT BOARD	
TITLE	DWG NO.
SCHEMATIC	ED-255874
ARTWORK	BD-255875
MASTER DWG	BD-255876
ASSEMBLY DWG	BD-255877
OUTLINE DWG	BD-255878
SOLDER MASK	BD-255879
SILKSCREEN	BD-255880
PARTS LIST	PL-255881

ITEM NO.	PART NO.	DESCRIPTION OR SIZE	QTY. REQ.

PARTS LIST

UNLESS OTHERWISE SPECIFIED			ORIGINATOR	G. KRAFCZYK	8-3-89
FRACTIONS	DECIMALS	ANGLES	DRAWN	G. KRAFCZYK	8-3-89
+/-	+/-	+/-	CHECKED	G. KRAFCZYK	9-25-89
1. BREAK ALL SHARP EDGES 1/64 MAX. 2. DO NOT SCALE DRAWING. 3. DIMENSIONING IN ACCORD WITH ANSI Y14.5 STD S			APPROVED	G. KRAFCZYK	9-25-89
			USED ON		
MAX. ALL MACHINED SURFACE			MATERIAL		

SCIDESIGN Release 3.0

FERMI NATIONAL ACCELERATOR LABORATORY
UNITED STATES DEPARTMENT OF ENERGY

D0 CALORIMETER
BLS CRATE MONITOR
SCHEMATIC

SCALE	FILMED	DRAWING NUMBER	REV.
		3740.412-ED-255874	A

REV.	DESCRIPTION	DRAWN	DATE
		APPD.	DATE
A	CONVERTED TO AUTOCAD	A. KNUDSON	5/22/00

TOP

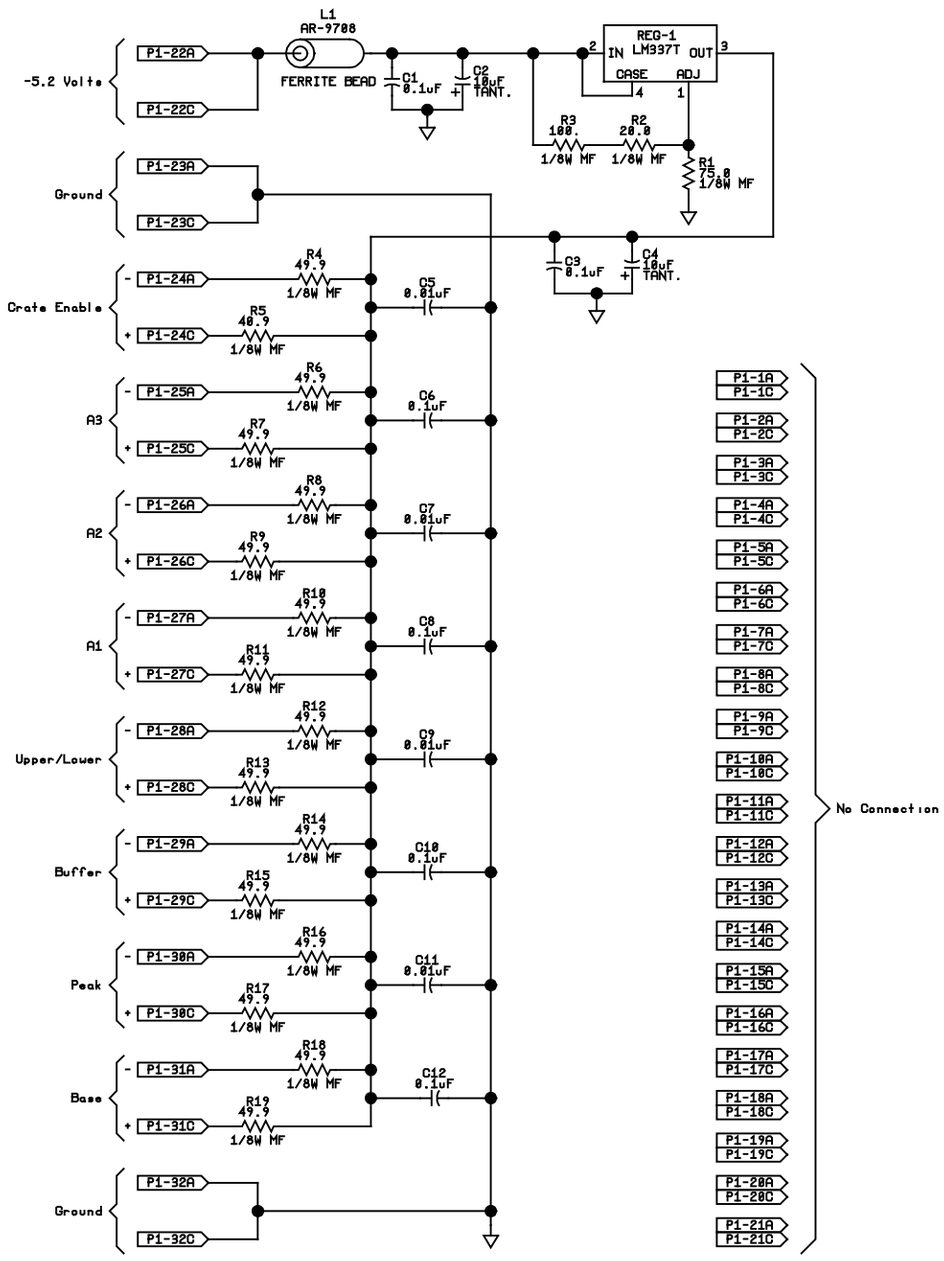

NOTE:

BACKPLANE CONNECTORS P2 AND P3 ARE NOT USED FOR THIS 9U CARD.

PRINTED CIRCUIT BOARD	
TITLE	DWG NO.
SCHEMATIC	EC-255711
ARTWORK	BD-255819
MASTER DWG	BD-286153
ASSEMBLY DWG	BD-286157
OUTLINE DWG	BD-286156
SOLDER MASK	
SILKSCREEN	
PARTS LIST	PL-286155

ITEM NO.	PART NO.	DESCRIPTION OR SIZE	QTY. REQ.
PARTS LIST			

UNLESS OTHERWISE SPECIFIED			ORIGINATOR	G. KRAFCZYK	9-28-90
FRACTIONS	DECIMALS	ANGLES	DRAWN	G. KRAFCZYK	9-28-90
+/-	+/-	+/-	CHECKED		
			APPROVED		

1. BREAK ALL SHARP EDGES 1/64 MAX.
2. DO NOT SCALE DRAWING.
3. DIMENSIONING IN ACCORD WITH ANSI Y14.5 STD S

MAX. ALL MACHINED SURFACE

SCIDESIGN Release 3.0

USED ON

MATERIAL

FERMI NATIONAL ACCELERATOR LABORATORY
UNITED STATES DEPARTMENT OF ENERGY

D0 CALORIMETER
BLS CRATE BUS TERMINATION
ELECTRICAL SCHEMATIC

SCALE	FILMED	DRAWING NUMBER	REV.
		3740.412-EC-255711	A