L2STT
Trigger Simulator

Silvia Tentindo-Repond, FSU

D0 Collaboration Meeting

April 14, 2000

Outline

- Trigger new Simulator Requirements
- new Simulator - Emulator Requirements
- present Simulator status
- Monte Carlo studies (clustering / roads/ tracks)
- future: for present and new Simulator
- List of tasks and man power

Trigger Configuration

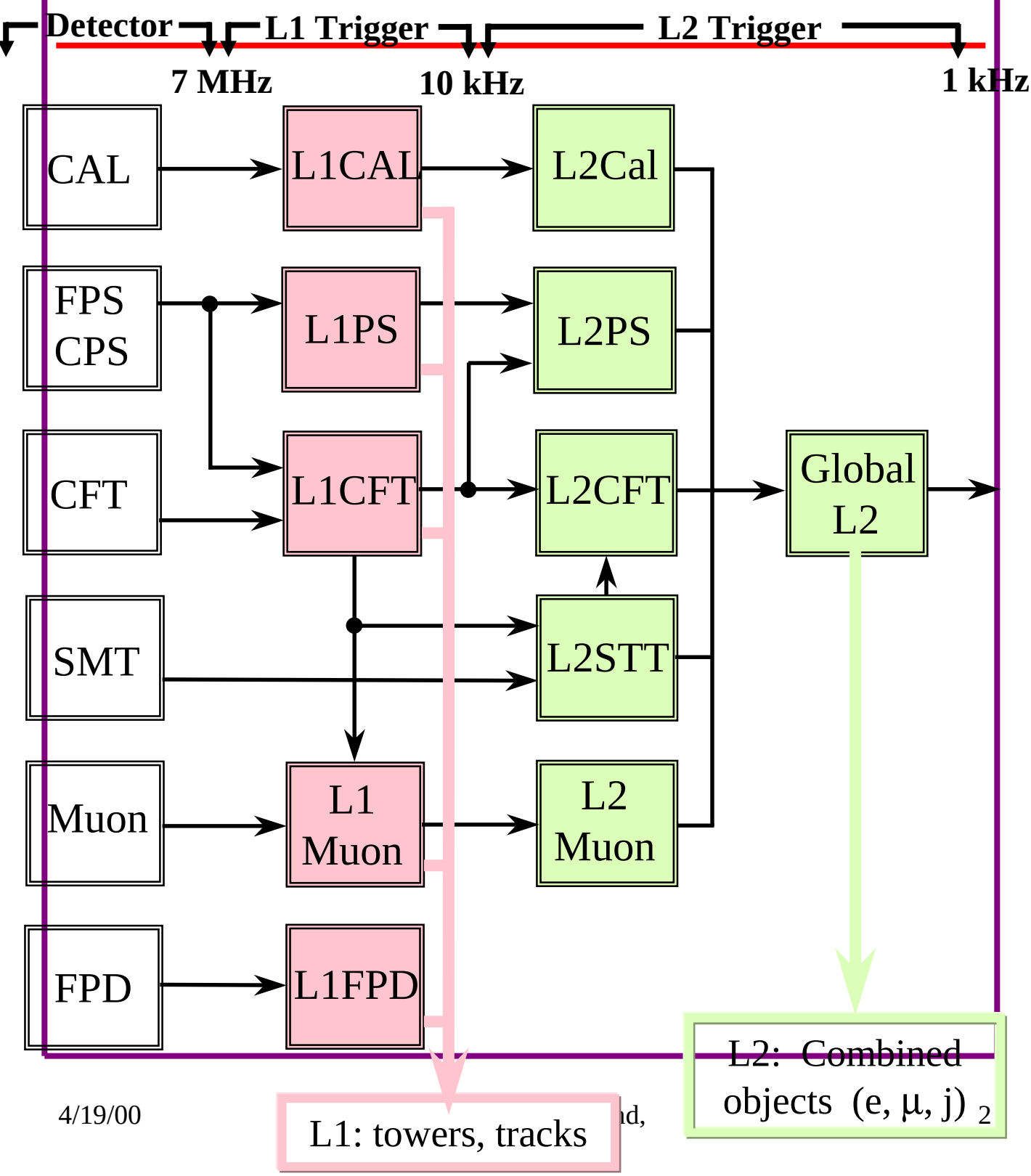

New Simulator Requirements

- Requirements for the new L1 and L2 Trigger Simulators (Blazey, Protopopescu note, March 28, 00)
  1. Create readable *Trigger Configuration Files* from Data Files - reconfigure at RCP level -
  2. Simulate L2STT *Processor*
  3. Fill L2STT into *RawDataChunk*
  4. Run L2STT *trigger Analyzer*
  5. Do L2STT *trigger Verification*

- **2 - L2STT Processor**
  should satisfy the requirements for Emulator
  - read trigger Configuration files [Coor RCP's]
  - read inputs from RawDataChunk (SMT) AND information generated by L1 (L1CTT)
  - convert event information to triggering objects (STT tracks)

New Simulator (cont.)

- (cont. L2STT Processor)
  - run triggering objects through trigger elements to turn on/off, AND/OR terms
  - write out information to subsequent stages (L2CTT to L2G, and L3).
  - include option to switch to 'mark-and-pass' information for further *check and test* the processor behavior
  - write out all info to later create raw data chunk * *satisfied by UDC*
  - write on separate chunks the AND/OR terms for trigger logic
  - update *summary tables*

- 3 - Complete RawDataChunk
  and write output to RawdataChunk
- 4 - Analysis :
  - fill Ntuples for developers and users. Two separate sets, Use general tool NtupleMgr from Analyze

New Simulator (cont.)

- (cont. Analysis)
  - more complete Ntuple to be used for debugging.
  - official Ntuple for users, to Run MonteCarlo files or Real Data files.
  - study of different Physics channels, efficiencies and resolutions.
  - study, comparison and optimization of various Algorithms used in the processor in function of the Physics channels

- 5 - Trigger *Verification*
  - provide a package that compares the input RawDataChunk and the output RawDatChunk , when the input comes from *Real Data*
  - provide run vsn to compare different codes from different releases.
  - provide easy switches to run partial components of the processor, or all together in the D0 integrated system.

D0 trigger Simulator packages and chunks

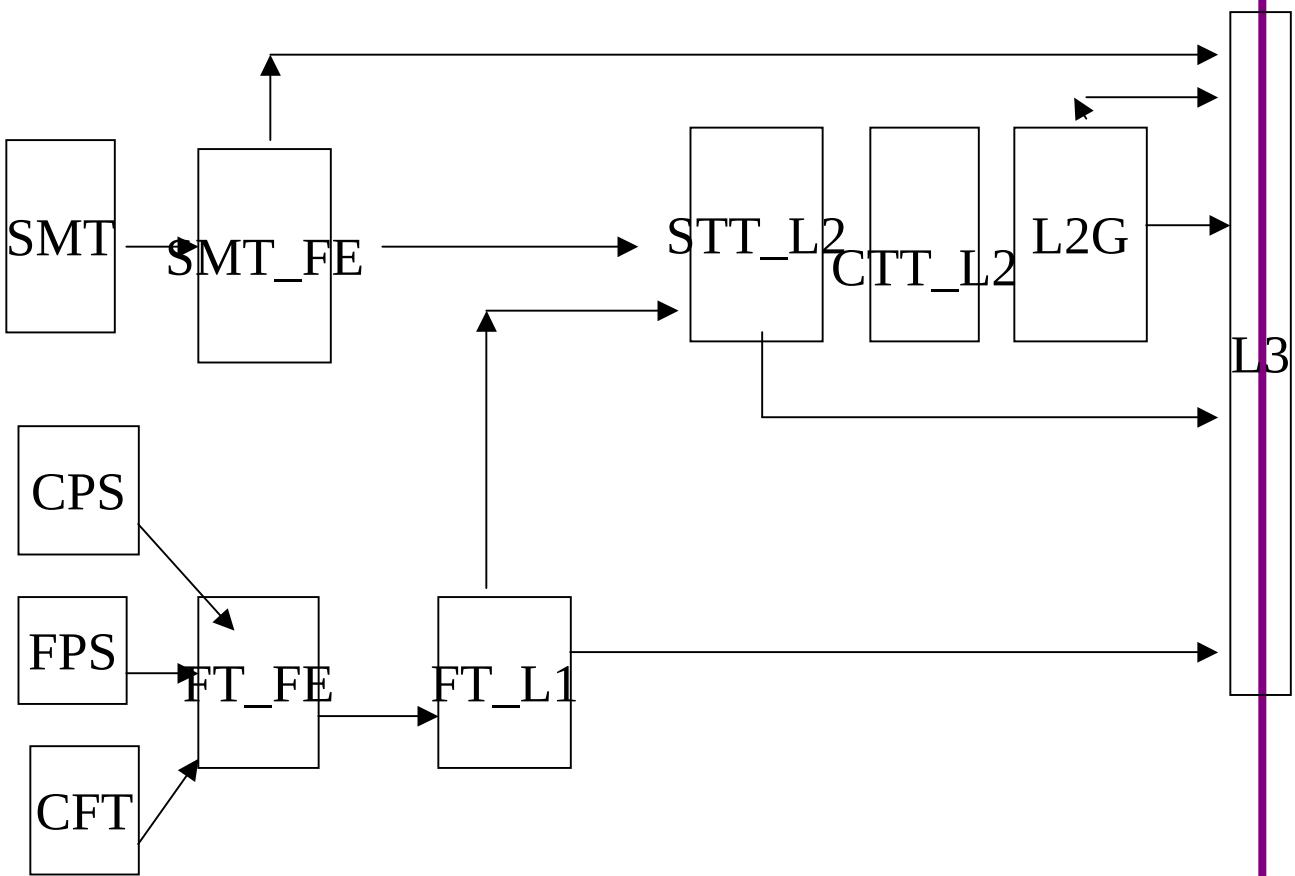

L2STT simulator block diagram : L2STT Components

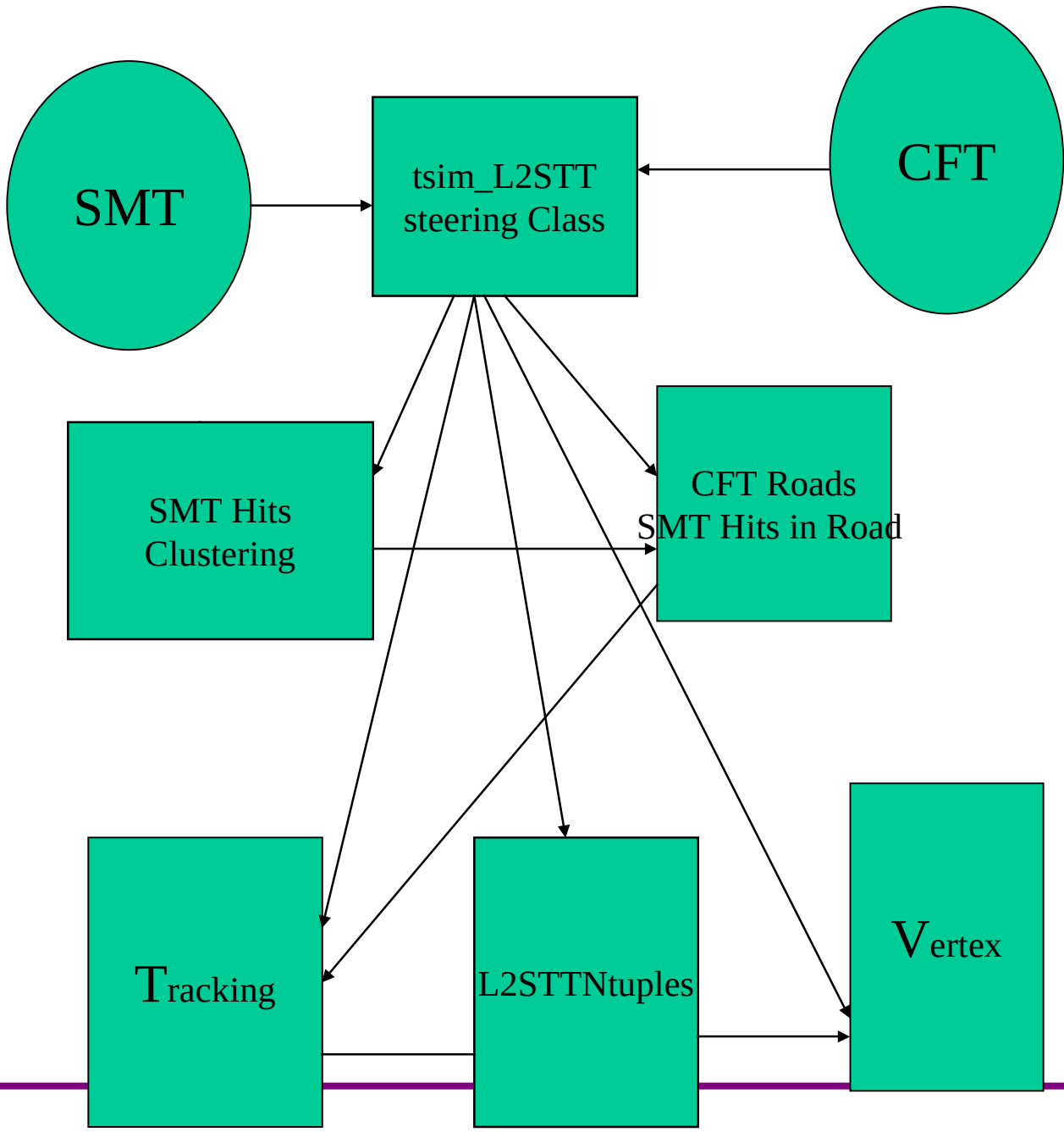

tsim_L2STT Packages and Classes

- PACKAGES:
  - tsim_L2STT
  - l2stt_util
  - l2stt_tracking

- CLASSES :
  (L2STT component classes in package tsim_l2stt)
- tsim_L2STT STEERING CLASS
- L2STTCluster Class : simulates the Clustering FPGA of the STC
- L2STTHitsInRoads simulates the FRC and the hit filtering FPGA of STC
- L2STTTrack simulates track fitting in the TFC
- L2STTVertex simulates the Vertex Card
- L2STTData contains data to be passed to L2CTT
- L2STTDataMon contains data to be passed to L3

- all packages released in CVS t84

L2STT Clusters

- STT Clusters are calculated from SMT hits
- only the SMT Barrel reaches L2STT
- Clusters from axial (X Y)view and from stereo (Z) view as well are calculated
- only axial Clusters are forwarded to Roads. The Z Clusters are sent to the Vertex (and to L3) .
- Several possible Clustering algorithms are to be implemented
- present Algorithm I ‘ nearest neighbohr’ is designed to fulfill the hardware constraints of the Silicon trigger card and of the FPGA in the STC
- It is the Clustering at present implemented in L3 for the SMT hits.
- Clustering Algorithm II needs to be implemented next.

L2STT Clusters
t tbar

- X vs Y coord for cluster's centroid position
- SMT barrel only

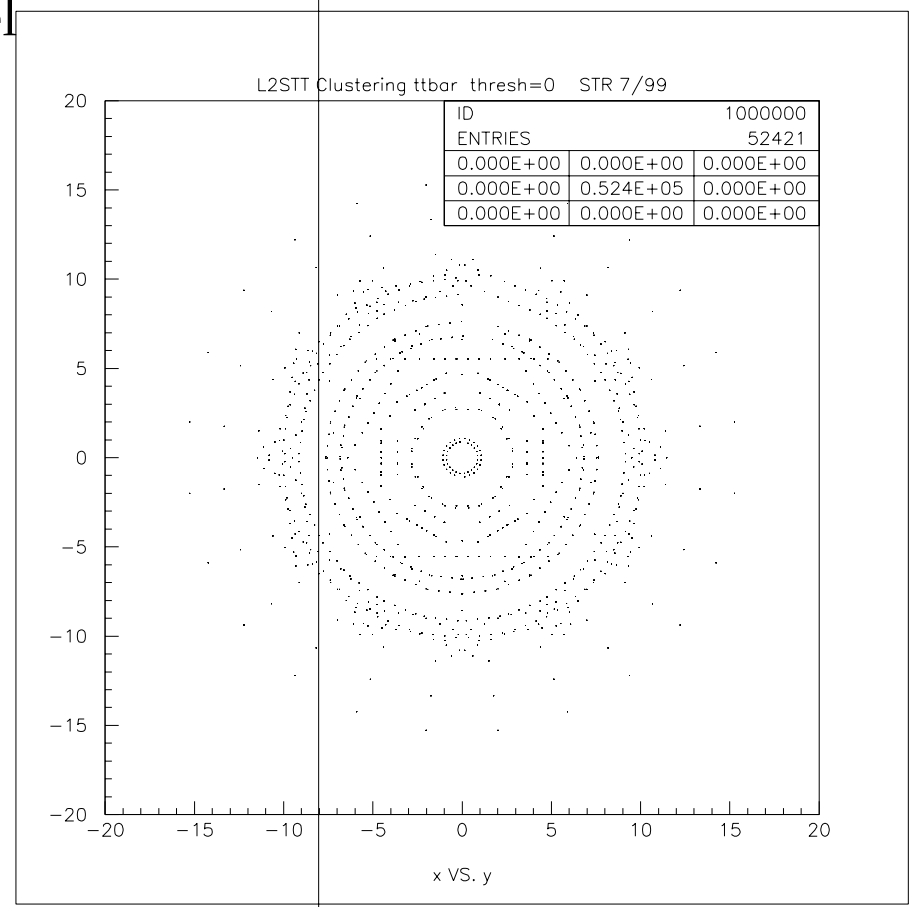

L2STT Roads

- STT Roads are defined in STT from the track information of CFT Level 1.
- A Look Up Table assigns to each CFT track a given position in a SMT module as an hardware address (Sequencer #, HDI #, Chip # and Channel #).
- Depending on the pt of the CFT track, a width for the road is assigned
- Each SMT road is compared to the set of SMT hits (clusters) and the clusters that can be associated to a given road are saved into the Class ‘ Hits_in_Road’.
- A stand-alone program has been created and tested and will soon be integrated to the tsim_L2STT as a new package and released in CVS.

L2STT Roads

- X vs Y display of Clusters in Roads
- t tbar + 2 min bias event

- blue = CFT tracks hit
- green = SMT Cluster
- red = Cluster in Road

- S. Chopra
  standalone code - needs integration to tsim_L2STT

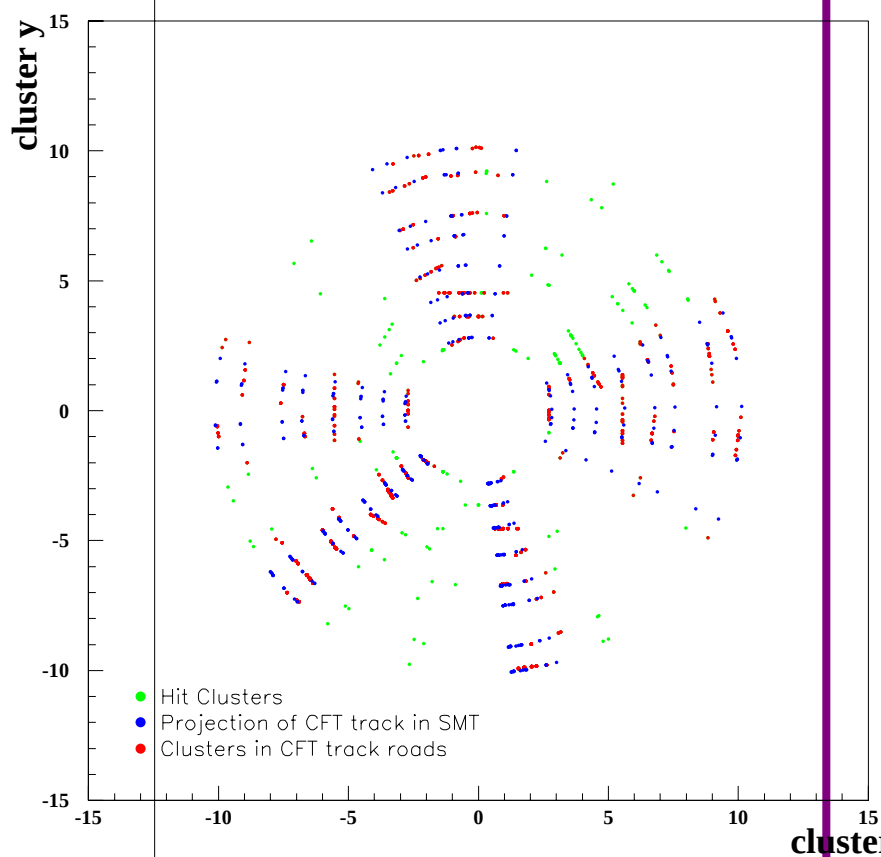

L2STT Tracks

L2STT Status

- The following components have been designed, implemented and released: **present release in CVS t00.84.00**
  tsim_L2STT (main package)
  getSMT_FE (readout for the input SMT front End)
  getFT_L1 (readout for the input CFT L1)
  doClustering (calculate Clusters from SMT hits by using the ‘nearest neighbohr‘ cluster Algorithm) fill_L2STT (creates the L2STT output to CTTL2 and L3
  doRoads (associates Clusters to ‘Roads’ defined from CTT tracks)
  doTrackFitting (reconstruct STT tracks from the Clusters in Roads)
  fillNtuples (fills local Ntuples for STT)
- the following components need to be modified in the <u>new</u> Simulator scheme:
  fill Ntuples (needs to use NtupleMgr from Analyze)
  fill_L2STT (needs to use IOGen)
  getSMT_FE ? (from UDC to RDC - IOGen?)
  getFT_L1 ? (from UDC to RDC IOGen?)

L2STT Status (cont.)

- The following components need/could be added for Emulation (**L2STT Firmware) :**
  create cable-data for FPGA Clusters (*) - done
  create cable-data for FPGA Filter (**) -designed
- create cable-data for DSP tracking ?
- Create cable-data for internal components of STT cards, f.ex. From STC Cluster FPGA to STC Filter FPGA, etc...

- Implement detailed simulation of FRC ?

- (*) *"L2STT Firmware: a cable-format file for the SMT input to the Cluster FPGA of the Silicon Trigger Card" D0Note 3744 10-April-2000 (Silvia TR, H Prosper, H Wahl)*
- *(**) Note in preparation*

L2STT Status (cont.)

- All the component packages have been released in CVS (vsn 84) .
- The Clusters/Roads/Tracks packages have been run with MC events.
- *Recent notes describing some components and functions of the L2STT trigger Simulator :*
  ** " Data Structure for the Level 2 Silicon Tracking Trigger Detector readout "* D0/Trigger/3681.
  ** " The Level 2 trigger Simulator and its Clustering Algorithm "* D0/Trigger/3684.
- People at present contributing to the L2STT Trigger Simulator:
  Wendy Taylor, John Hobbs (Tracking)
- Technical support :

Mike Fortner -> Charles Leggett	UDC
Roger Moore	IOGen and L2G,L3
Meena ,Barberis	SMT
Kin Jyp, Dave Toback	CTTL1, L2CTT
Manuel Martin	VHDL

-

L2STT Analysis

- The Simulator activated configuration consists of
- Clustering / Roads / STT Tracking
- L2STTNtuples exist for all the components

- input files used (all from MonteCarlo PhaseII)

  .....

  50 Gev single track muons (1000 events)
  t tbar + 0 min bias (100 events)
  t tbar + 2 min bias (100 events)
  Z -> b bbar + 2 min bias (100 events)
  Z -> e e + 4 min bias (100 events)
  QCD 40-80 (100 events)
-

L2STT Clusters muons

- Reconstructed clusters multiplicity per event
- ‘nearest neighbohr’ algorithm
- single track muons (50 Gev)
- SMT Barrel only

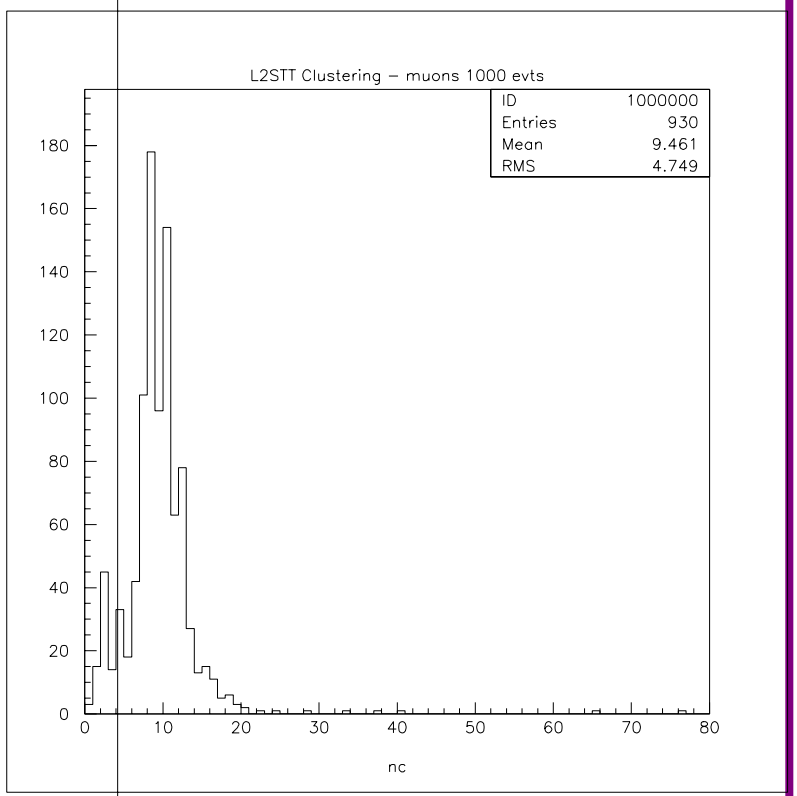

L2STT Clusters muons

- Clusters size
- single muons (50Gev)
- ‘nearest neighbohr ‘ algorithm
- no ADC threshold cut

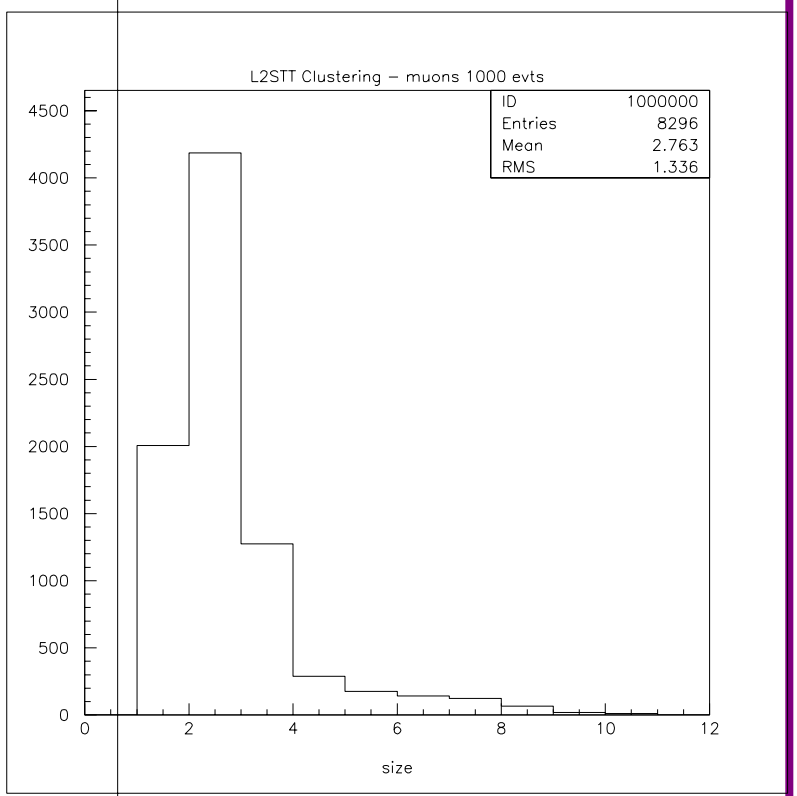

L2STT Clusters muons

- Cluster's pulse height
- single muons (50gev)
- not ADC threshold cut

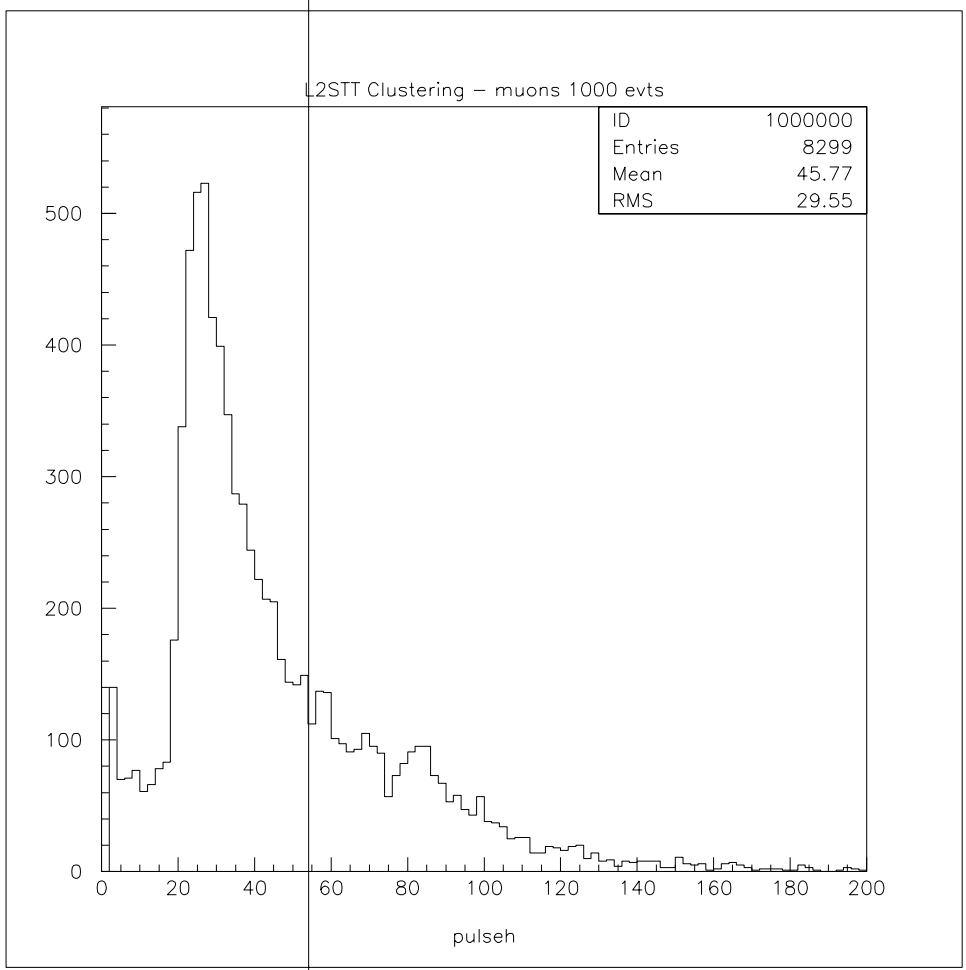

L2STT Clusters
t tbar

- Clusters multiplicity per event
- t tbar - no min bias events
- ‘nearest neighbohr’ Algorithm
- no ADC threshold cut

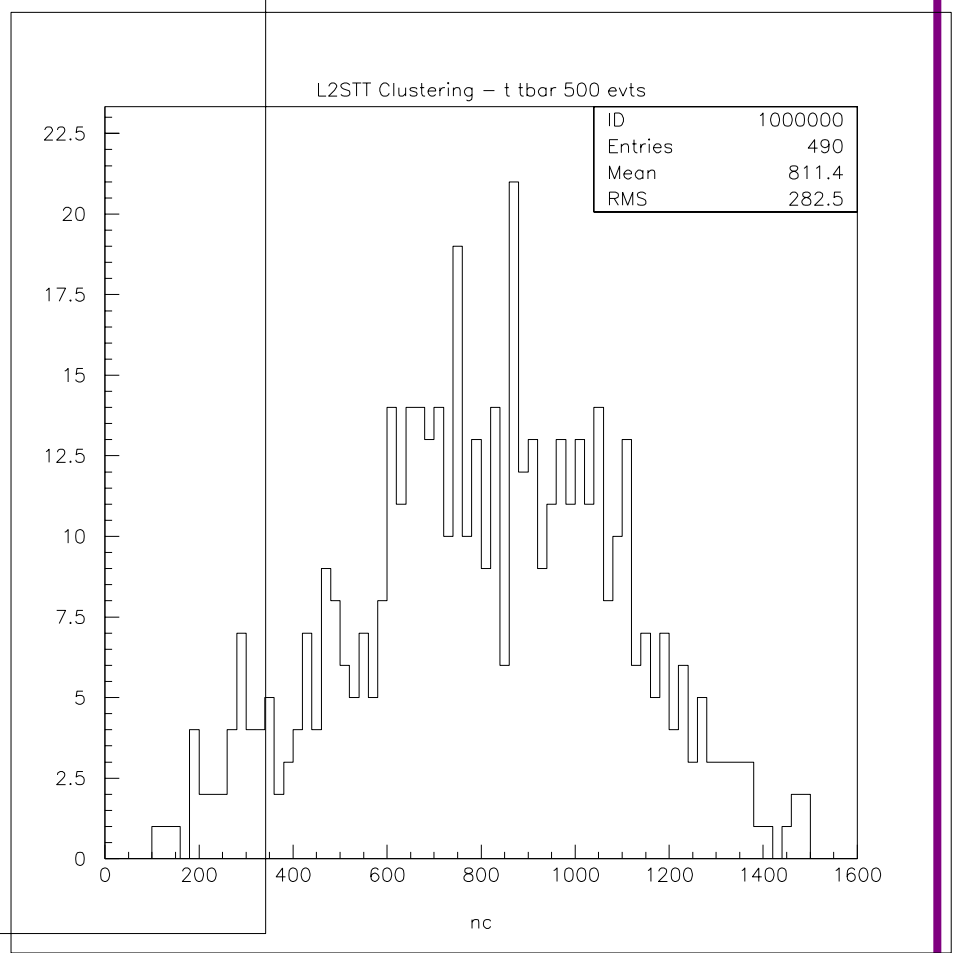

L2STT Clusters
t tbar

- Clusters size
- t tbar event no min bias
- no ADC threshold cut

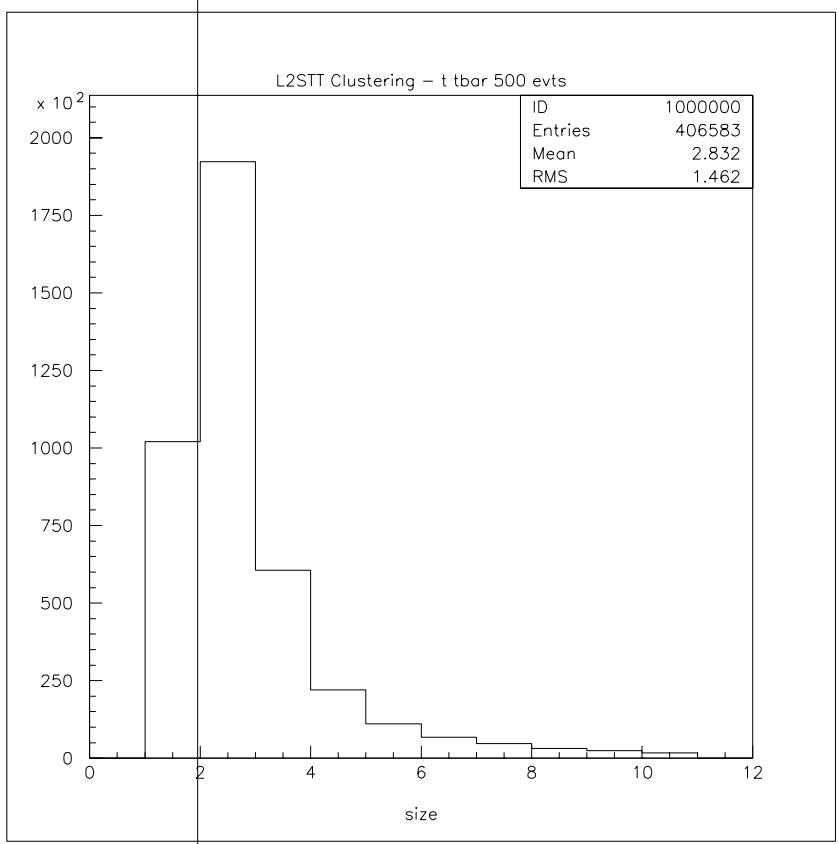

L2STT Clusters
t tbar

- Clusters pulse height
- t tbar no min bias
- no ADC threshold cut

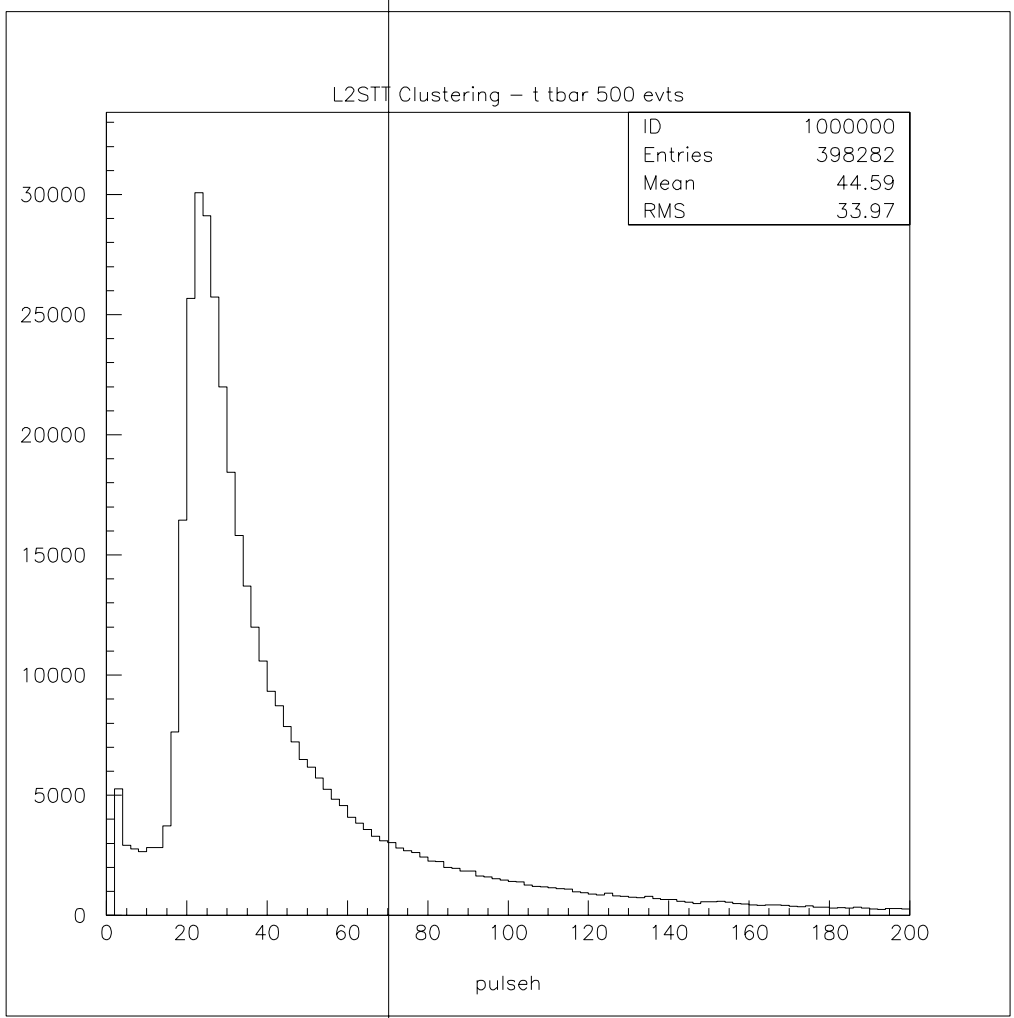

Analysis - Occupancies

- Clusters spectrum for each SMT Layer
  t tbar
  + 0mbias

Analysis - Occupancies

- Clusters spectrum for each SMT Layer
  t tbar
  + 0mbias

Analysis - Occupancies

- Clusters spectrum for each SMT Layer
  t tbar
  + 2mbias

Analysis - Occupancies

- Clusters spectrum for each SMT Layer
  t tbar
  + 2mbias

Analysis - Occupancies

- Clusters spectrum for each SMT Layer QCD 40-80

Analysis - Occupancies

- Clusters spectrum for each SMT Layer QCD 40-80

Analysis Table (April 2000)

L2STT Simulator Plans and Man Power

- L2STT simulator components :

- Framework STR
- Algorythms:
  - Clustering I STR
  - Clustering II MN ?
  - Roads (SC) , BL
  - Tracks , All algos WT, JH
  - I/O STR (+ CL, RM)

- support from SMT: (RawDataChunk, UDC?)
  Bruno Thor, Meena
- support from CTTL1, L2CTT : Kin Yip, Dave Toback
- support fro UDC : Charles Leggett
  support for IOGen : Roger Moore
- Analysis and Verification : STR + ...All !

L2STT Simulator Plans and Man Power (cont.)

- L2STT new simulator :

  - New Ntuples with Ntuple Mgr STR + student
  - Verification of Roads BL
  - Verification of Tracks WT
  - Implementation of new Cluster Algorythms MN
  - LUT for Roads BL
  - LUT for Tracks WT
  - New I/O (RDC , (UDC), IOGen STR + experts!

- L2STT Simulator and Monitoring

  i.e. How to create a ‘mark and pass’ chunk to be used by STT Examine from the standard STT Output chunk . BL + student

L2STT Simulator Plans and Man Power (cont.)

- L2STT simulator - emulator :

- FRC GS
- STC MN
- TFC WT
- Firmware STR + students + ...all
  - SMT cable-format input to STC STR
  - L1CTT and FRC cable-format input to STC STR, GS
  - cable-format input to TFC ? WT
- any other implementation requiring interface to VHDL
- ?
- liaison with VHDL (general) MM

SMT Input to tSim_L2STT STR/3/99

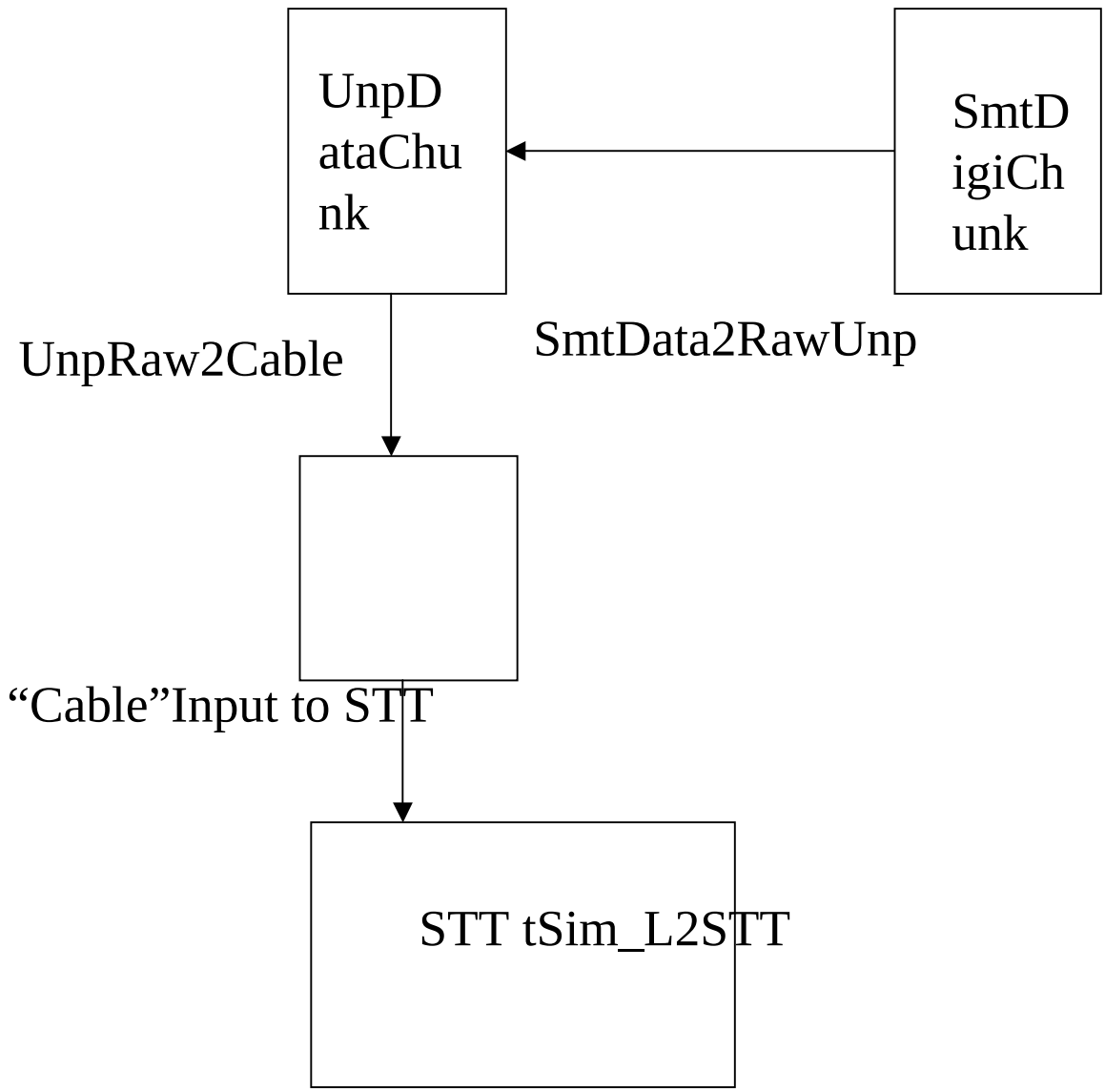

tSim_L2STT
inputs and outputs

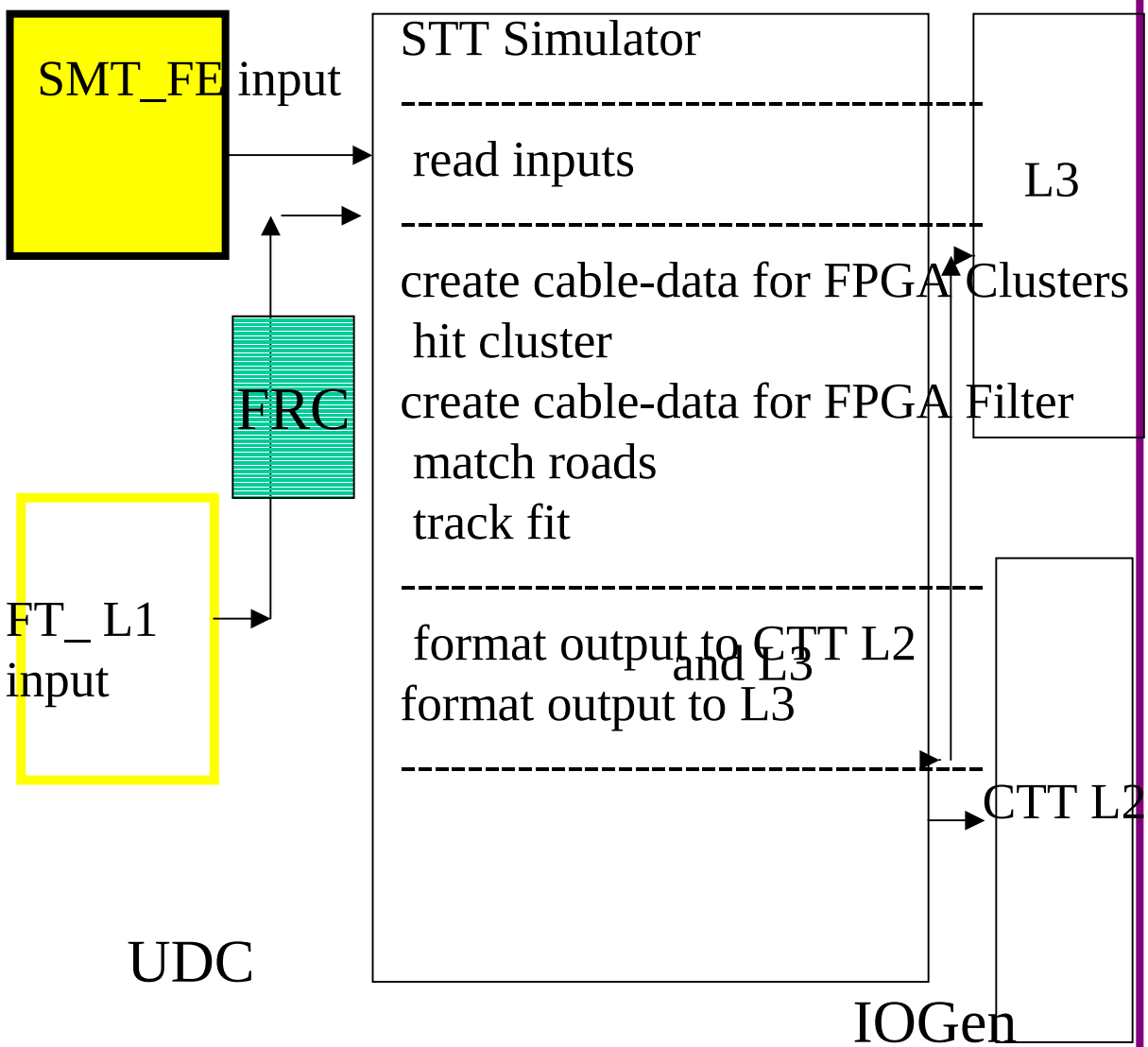

L2STT
Output to L2CTT and L3

- A D0Note 3681 “data Structure for the Level 2 Silicon tracking trigger detector” describes the design for the L2STT output chunk, compatibly with the requirements.
- L2STT forwards to L2CTT all the information received from L1CTT, and adds the track information from STT, on a *track-by-track* basis.
- L2STT forwards to L3 (on mark-and-pass events) the full information from STT, including Clusters, Roads ,Tracks and Vertex.