B	ASSIGNED VALUE FOR R002	M. MATULIK	08/26/99

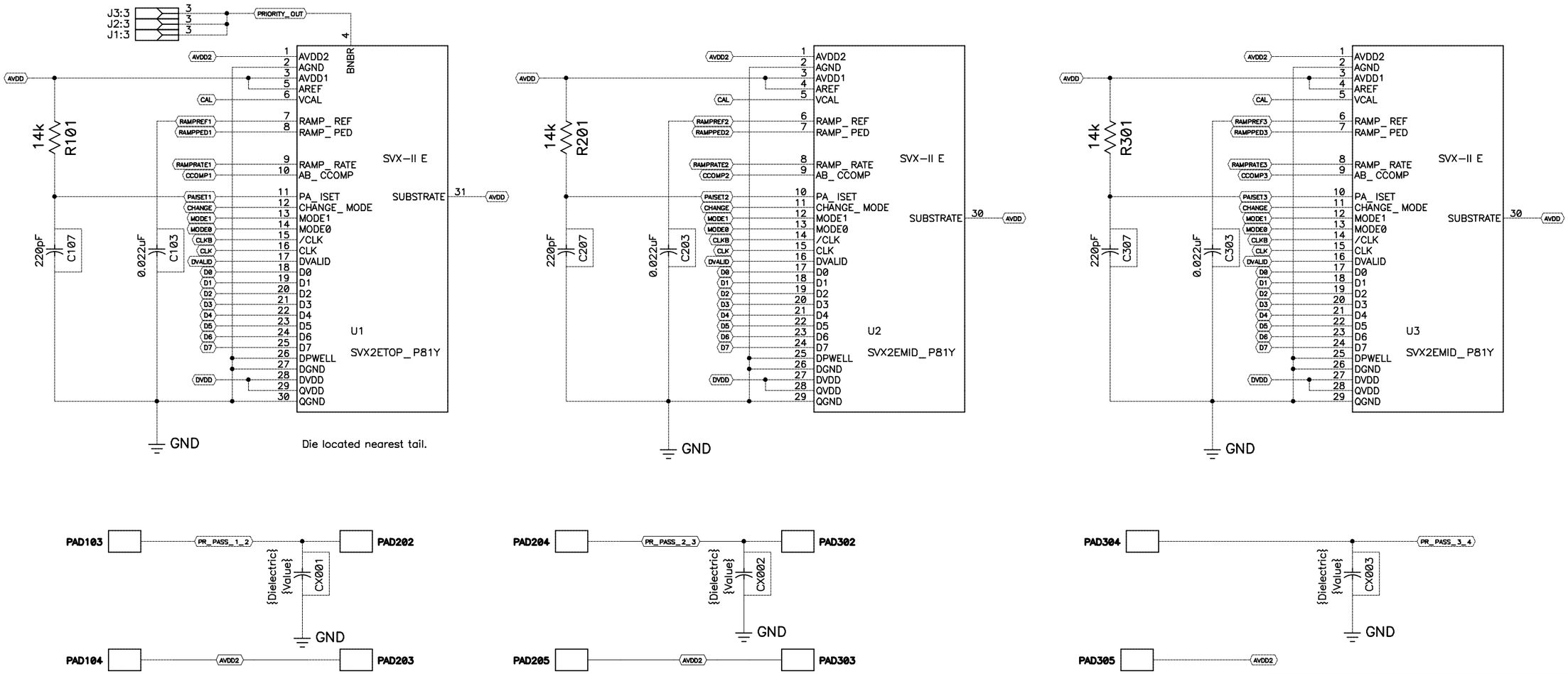

ITEM	PART NUMBER	DESCRIPTION OR SIZE	QTY
PARTS LIST			

UNLESS OTHERWISE SPEC.			ORIGINATOR	M. Matulik	06/26/98
FRACTIONS	DECIMALS	ANGLES	DRAWN	M. Matulik	06/26/98
			CHECKED		
Thu Aug 26 1999 11:14:28			APPROVED		
			USED ON		
			MATERIAL		

FERMI NATIONAL ACCELERATOR LABORATORY
UNITED STATES DEPT. OF ENERGY

6 Chip H-Disk HDI: Short Left Hand Tail

CIRCUIT IDENTIFICATION NUMBER: 7612
C:\PROJECT\SILICON\HDI\7612

SCALE	FILMED	DRAWING NUMBER	Sheet 1 of 4	REV.
		3823.112-EB-330209		B