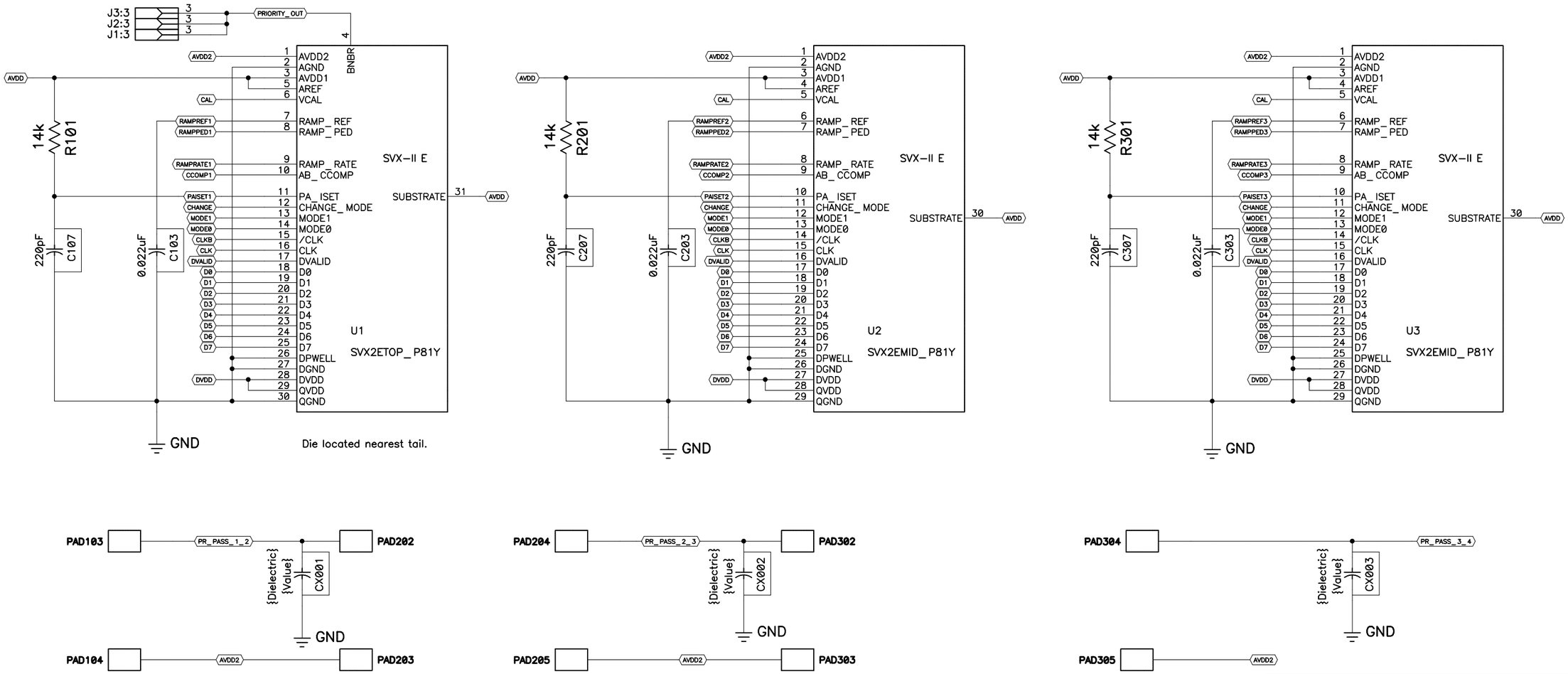

ITEM	PART NUMBER	DESCRIPTION OR SIZE	QTY
PARTS LIST			

UNLESS OTHERWISE SPEC.			ORIGINATOR	M. Matulik	06/26/98
FRACTIONS	DECIMALS	ANGLES	DRAWN	M. Matulik	06/26/98
			CHECKED		
Fri Apr 02 1999 15:29:20			APPROVED		
			USED ON		
			MATERIAL		

FERMI NATIONAL ACCELERATOR LABORATORY

UNITED STATES DEPT. OF ENERGY

6 Chip H-Disk HDI: Short Left Hand Tail

CIRCUIT IDENTIFICATION NUMBER: 7611

C:\PROJECT\SILICON\HDI\7611

SCALE	FILMED	DRAWING NUMBER	Sheet 1 of 4	REV.
		3823.112-EB-330209		A