B	ASSIGNED VALUE FOR R002	M. MATULIK	08/26/99

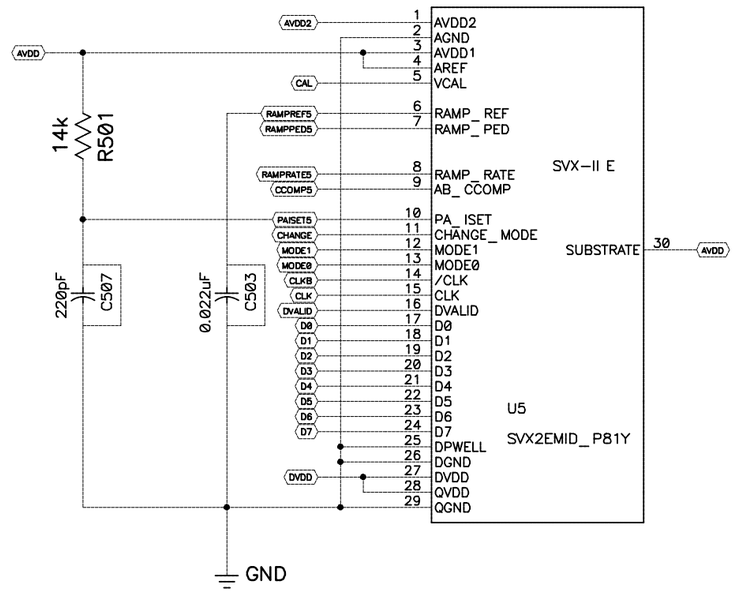

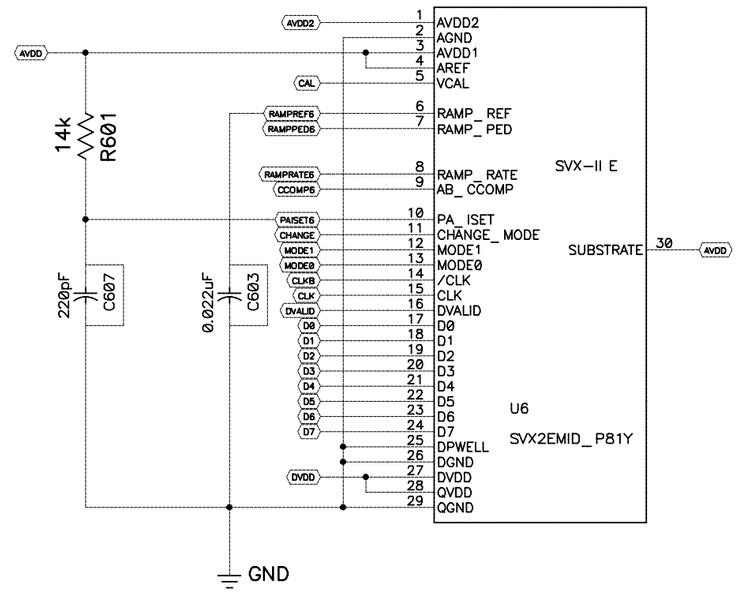

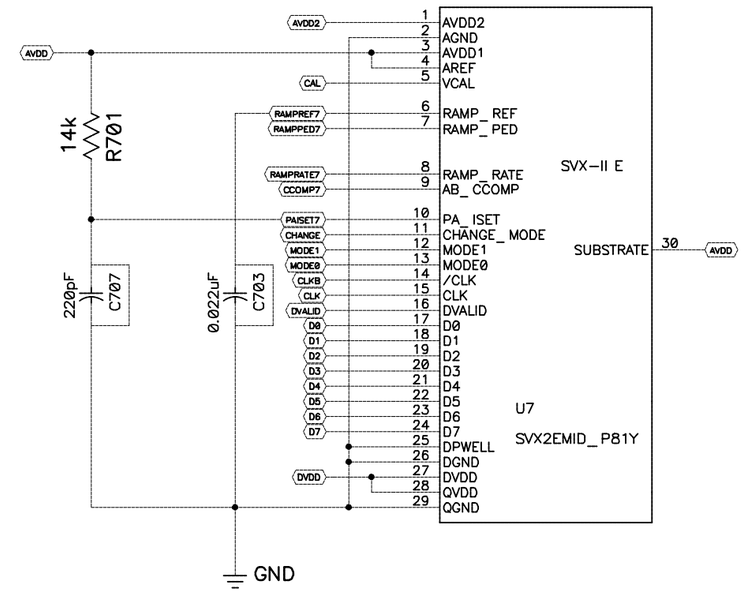

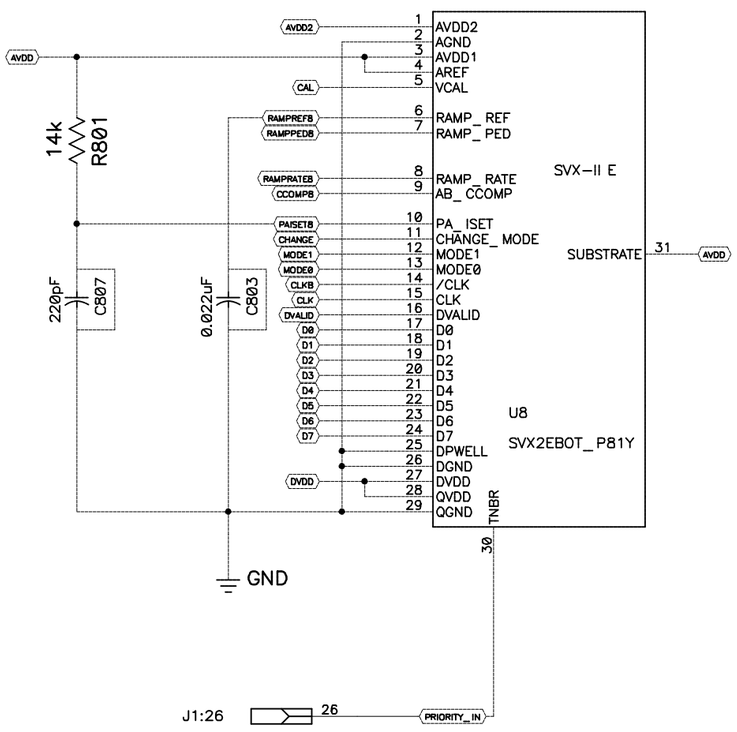

Components shorted with a dashed line indicate areas on the printed circuit board which require a trace on the plating link layer.

CIRCUIT IDENTIFICATION NUMBER: 4811

C:\PROJECT\SILICON\HDI\4811

ITEM	PART NUMBER	DESCRIPTION OR SIZE	QTY
PARTS LIST			

UNLESS OTHERWISE SPEC.			ORIGINATOR	M. Matulik	07/21/98
FRACTIONS	DECIMALS	ANGLES	DRAWN	M. Matulik	07/21/98
			CHECKED		
Thu Aug 26 1999 14:48:05			APPROVED		
			USED ON		
			MATERIAL		

FERMI NATIONAL ACCELERATOR LABORATORY

UNITED STATES DEPT. OF ENERGY

8 Chip F-Disk HDI: Short Left Hand Tail

SCALE	FILMED	DRAWING NUMBER	Sheet 2 of 4	REV.
		3823.112-EB-330132		B