B	ADDED VALUE FOR R002	M. MATULIK	08/26/99
C	CHANGED VALUES FOR C015 AND C016	M. MATULIK	10/01/99

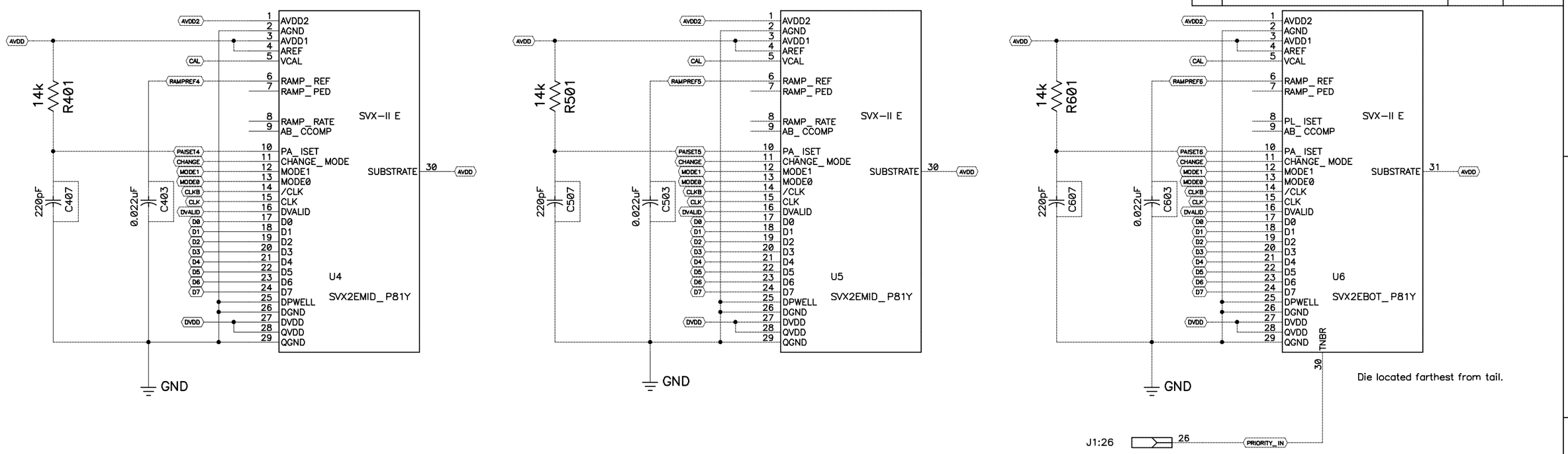

ITEM	PART NUMBER	DESCRIPTION OR SIZE	QTY
		PARTS LIST	

UNLESS OTHERWISE SPEC.			ORIGINATOR	M. Matulik	02/20/98
FRACTIONS	DECIMALS	ANGLES	DRAWN	M. Matulik	02/20/98
			CHECKED		
Fri Oct 01 1999 17:47:17			APPROVED		
			USED ON	D0 Silicon Detector	
			MATERIAL		

FERMI NATIONAL ACCELERATOR LABORATORY
UNITED STATES DEPT. OF ENERGY

6 Chip F–Disk HDI: Short Left Hand Tail

SCALE	FILMED	DRAWING NUMBER	Sheet 2 of 4	REV.
		3823.112–EB–330138		C

CIRCUIT IDENTIFICATION NUMBER: 4611
C:\PROJECT\SILICON\HDI\4611