B	ADDED VALUE FOR R002	M. MATULIK	08/26/99
C	CHANGED VALUES FOR C015 AND C016	M. MATULIK	10/01/99

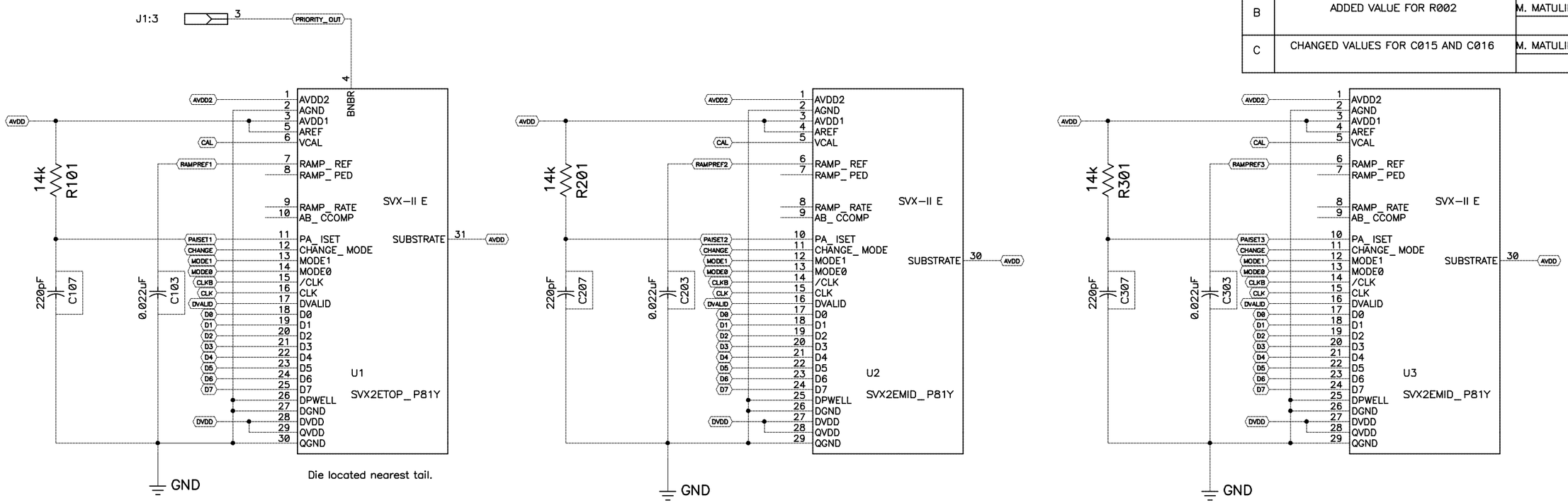

ITEM	PART NUMBER	DESCRIPTION OR SIZE	QTY
PARTS LIST			

UNLESS OTHERWISE SPEC.			ORIGINATOR	M. Matulik	02/20/98
FRACTIONS	DECIMALS	ANGLES	DRAWN	M. Matulik	02/20/98
			CHECKED		
Fri Oct 01 1999 17:46:57			APPROVED		
			USED ON	D0 Silicon Detector	
			MATERIAL		

FERMI NATIONAL ACCELERATOR LABORATORY

UNITED STATES DEPT. OF ENERGY

6 Chip F-Disk HDI: Short Left Hand Tail

CIRCUIT IDENTIFICATION NUMBER: 4611
C:\PROJECT\SILICON\HDI\4611

SCALE	FILMED	DRAWING NUMBER	Sheet 1 of 4	REV.
		3823.112-EB-330138		C