B	ADDED PLATING LINK TO PRIORITY_ PASS NET, MODIFIED COMPONENT VALUES.	M. MATULIK	06/09/98
C	ADDED VALUE FOR R002	M. MATULIK	08/26/99
D	CHANGED VALUES FOR C015 AND C016	M. MATULIK	10/01/99

SECONDARY CIRCUIT COMPONENTS

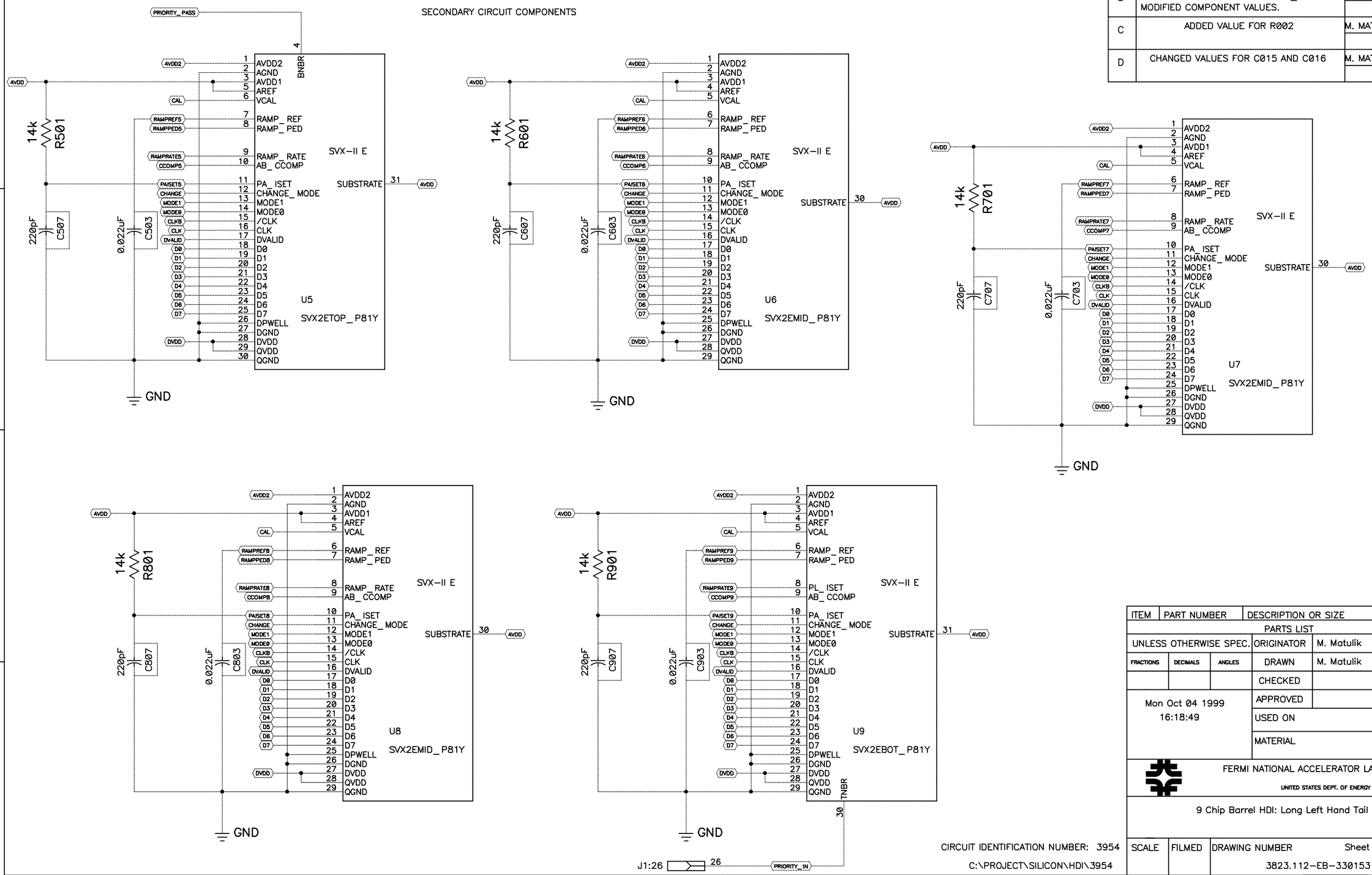

CIRCUIT IDENTIFICATION NUMBER: 3954

C:\PROJECT\SILICON\HDI\3954

ITEM	PART NUMBER	DESCRIPTION OR SIZE	QTY
PARTS LIST			

UNLESS OTHERWISE SPEC.	ORIGINATOR	M. Matulik	08/21/97
FRACTIONS / DECIMALS / ANGLES	DRAWN	M. Matulik	08/21/97
	CHECKED		
Mon Oct 04 1999 16:18:49	APPROVED		
	USED ON		
	MATERIAL		

FERMI NATIONAL ACCELERATOR LABORATORY

UNITED STATES DEPT. OF ENERGY

9 Chip Barrel HDI: Long Left Hand Tail

SCALE	FILMED	DRAWING NUMBER	Sheet 2 of 4	REV.
		3823.112-EB-330153		D