B	ADDED VALUE FOR R002	M. MATULIK	08/26/99
C	CHANGED VALUES FOR C015 AND C016	M. MATULIK	10/01/99

SECONDARY CIRCUIT COMPONENTS

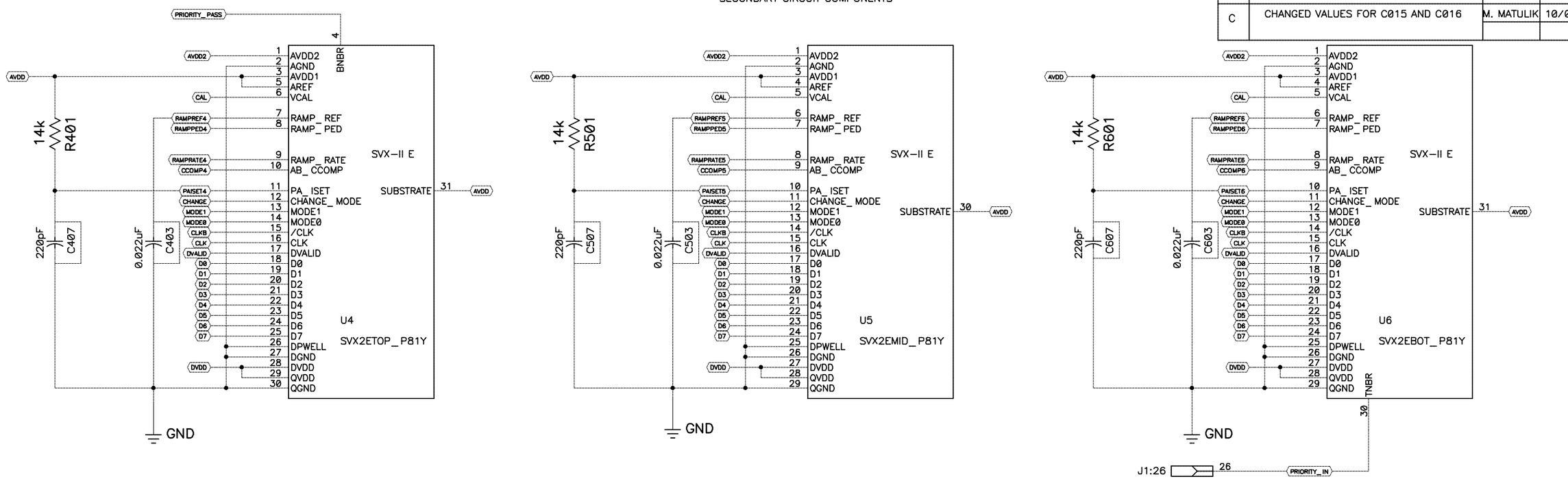

ITEM	PART NUMBER	DESCRIPTION OR SIZE	QTY
PARTS LIST			

UNLESS OTHERWISE SPEC.	ORIGINATOR	M. Matulik	06/29/98
FRACTIONS / DECIMALS / ANGLES	DRAWN	M. Matulik	06/29/98
	CHECKED		
Fri Oct 01 1999 17:31:08	APPROVED		
	USED ON		
	MATERIAL		

FERMI NATIONAL ACCELERATOR LABORATORY
UNITED STATES DEPT. OF ENERGY

6 Chip Barrel HDI: Long Left Hand Tail

CIRCUIT IDENTIFICATION NUMBER: 3651
C:\PROJECT\SILICON\HDI\3651

SCALE	FILMED	DRAWING NUMBER	Sheet 2 of 4	REV.
		3823.112-EB-330221		C