B	ADDED VALUE FOR R002	M. MATULIK	08/26/99
C	CHANGED VALUES FOR C015 AND C016	M. MATULIK	10/01/99

PRIMARY CIRCUIT COMPONENTS

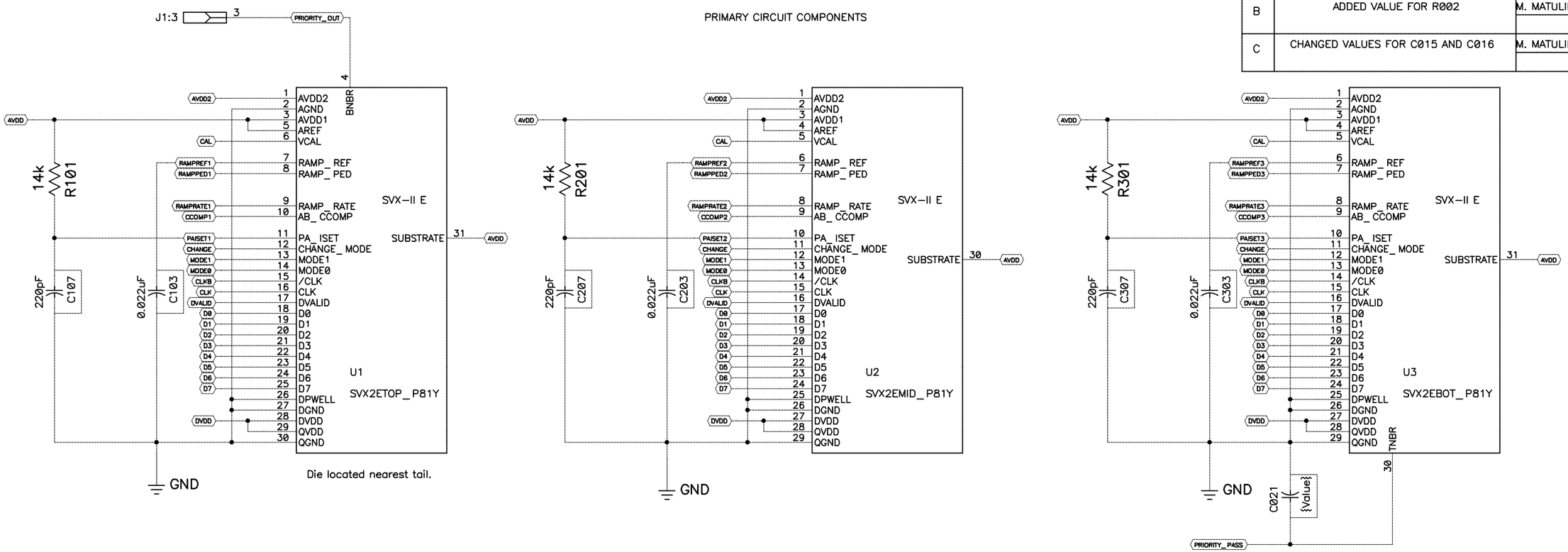

Note:
C021 is only implemented to provide a location for a plating link.
It may be located on one of the tooling hole tabs.

CIRCUIT IDENTIFICATION NUMBER: 3651

C:\PROJECT\SILICON\HDI\3651

ITEM	PART NUMBER	DESCRIPTION OR SIZE	QTY
PARTS LIST			

UNLESS OTHERWISE SPEC.			ORIGINATOR	M. Matulik	06/29/98
FRACTIONS	DECIMALS	ANGLES	DRAWN	M. Matulik	06/29/98
			CHECKED		
Fri Oct 01 1999 17:30:43			APPROVED		
			USED ON		
			MATERIAL		

FERMI NATIONAL ACCELERATOR LABORATORY
UNITED STATES DEPT. OF ENERGY

6 Chip Barrel HDI: Long Left Hand Tail

SCALE	FILMED	DRAWING NUMBER	Sheet 1 of 4	REV.
		3823.112-EB-330221		C