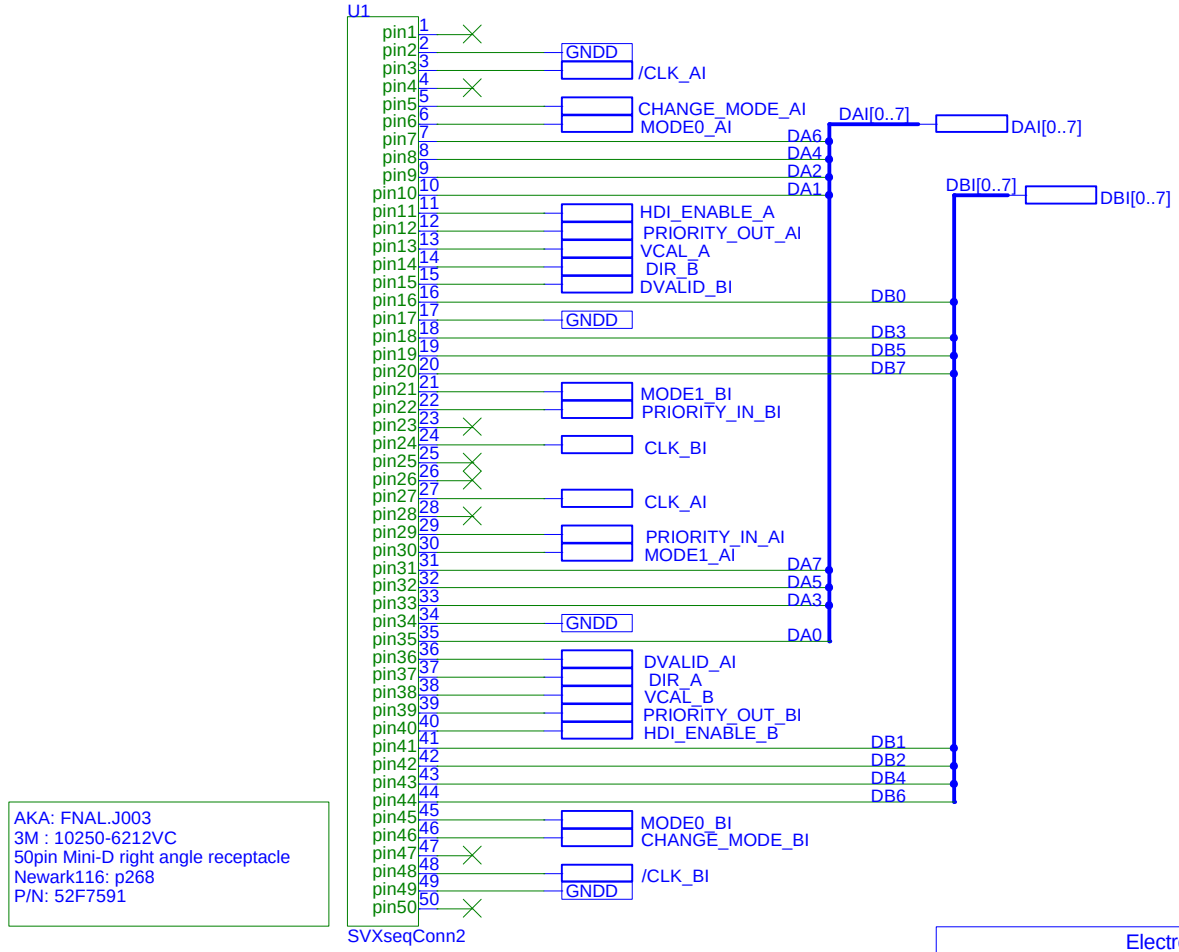

AKA: FNAL.J003
3M : 10250-6212VC
50pin Mini-D right angle receptacle
Newark116: p268
P/N: 52F7591

Electronics Design Laboratory

Dean W. Hall
124 Burt Hall
Kansas State University
Manhattan, KS 66506-0400

Title: M001: 3M 0.025 PFRC SVX Seq. Cable Connector

Size	Document Number:	REV
A	HEP008-M001	0.4

Date: 10/23/1998 Page 1 of 27

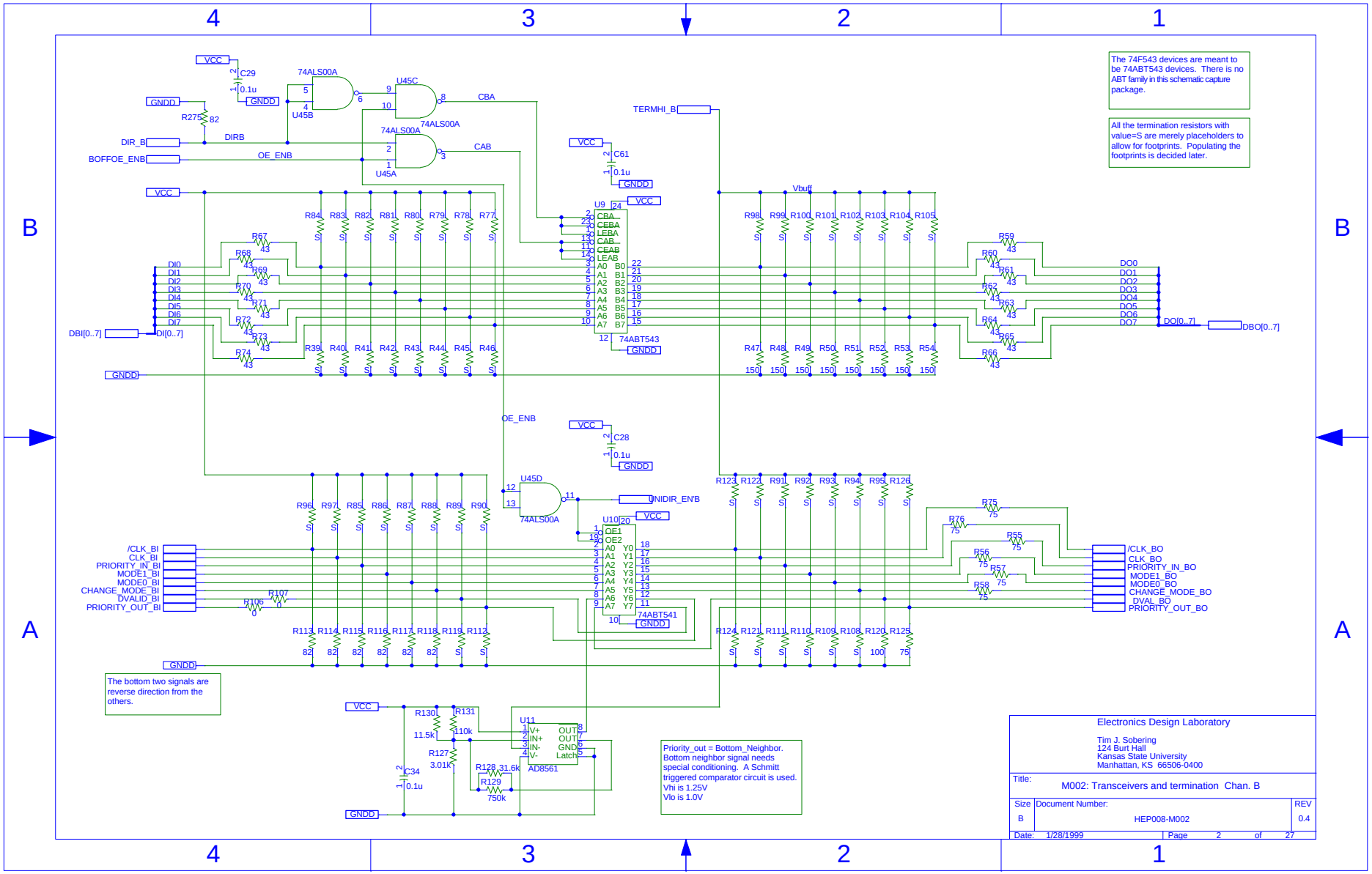
The 74F543 devices are meant to be 74ABT543 devices. There is no ABT family in this schematic capture package.
All the termination resistors with value=S are merely placeholders to allow for footprints. Populating the footprints is decided later.
The bottom two signals are reverse direction from the others.
Priority_out = Bottom_Neighbor. Bottom neighbor signal needs special conditioning. A Schmitt triggered comparator circuit is used.
Vhi is 1.25V
Vlo is 1.0V
U9 74ABT543
U10 74ABT541
U11 AD8561
U45A U45B U45C U45D 74ALS00A
DI0 DI1 DI2 DI3 DI4 DI5 DI6 DI7
DO0 DO1 DO2 DO3 DO4 DO5 DO6 DO7
DBI[0..7] DO[0..7] DBO[0..7]
/CLK_BI CLK_BI PRIORITY_IN_BI MODE1_BI MODE0_BI CHANGE_MODE_BI DVALID_BI PRIORITY_OUT_BI
/CLK_BO CLK_BO PRIORITY_IN_BO MODE1_BO MODE0_BO CHANGE_MODE_BO DVAL_BO PRIORITY_OUT_BO
TERMHI_B UNIDIR_EN'B DIR_B BOFFOE_ENB OE_ENB DIRB CBA CAB Vbuff
VCC GNDD
Electronics Design Laboratory
Tim J. Sobering
124 Burt Hall
Kansas State University
Manhattan, KS 66506-0400
Title: M002: Transceivers and termination Chan. B
Size B
Document Number: HEP008-M002
REV 0.4
Date: 1/28/1999
Page 2 of 27

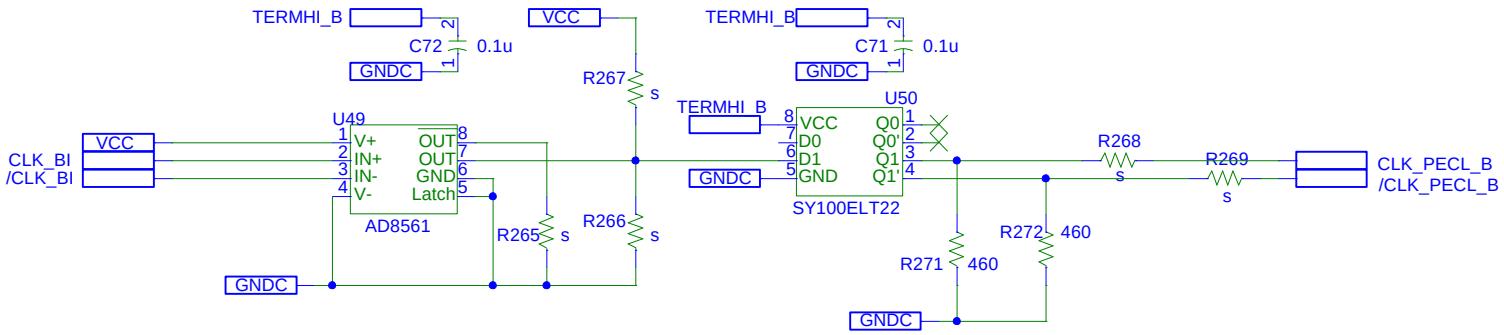

Electronics Design Laboratory

Tim J. Sobering
124 Burt Hall
Kansas State University
Manhattan, KS 66506-0400

Title: M003: Clock Driver Chan. B

Size	Document Number:	REV
A	HEP008-M003	0.4

Date: 1/22/1999 Page 3 of 27

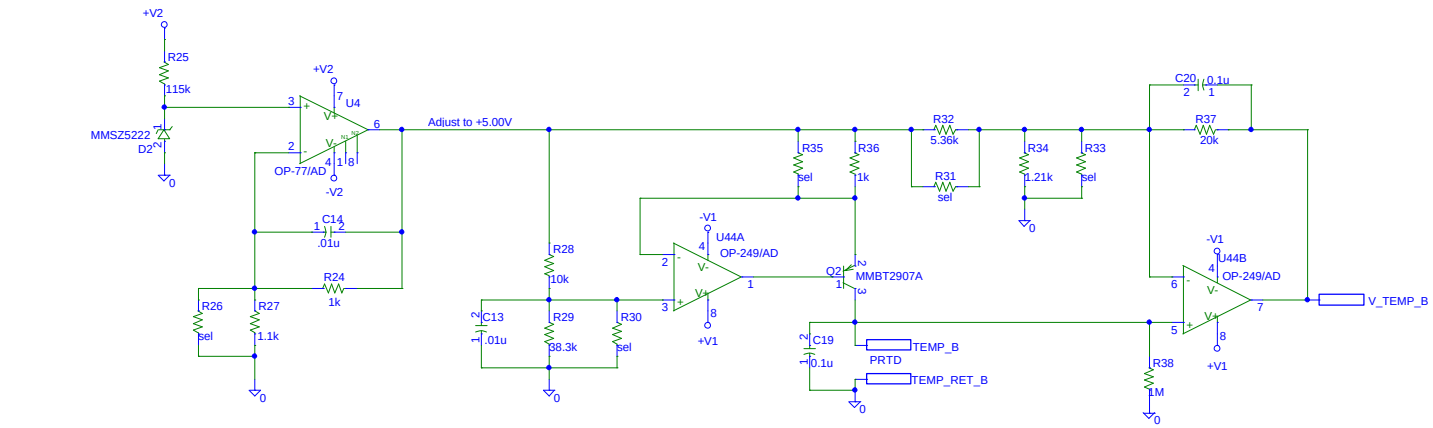

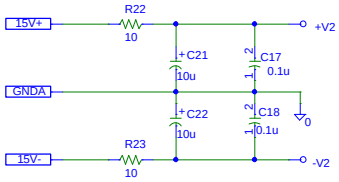

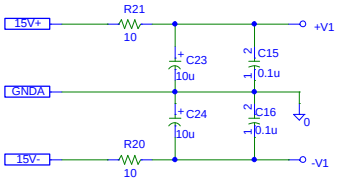

Note:
Temperature sensor is Pt RTD 1kOhm@0deg C.
3.85 deltaOhm / deg C.
Supply should be constant 1mA.

TEMP is one side of the PRTD, the raw temperature voltage ~1v +/-3.85mV/(deg.C).

TEMP_RET is the current-return side.

Notes:

1. Pick a FET in place of Q2 for lower error.
2. Ideal value for R31||R32 is 5.234k
3. Ideal value for R33||R34 is 1.192k
4. Check drive on OP-77
5. Size R25
6. Adjust R35 for 1mA max through thermistor

Electronics Design Laboratory

Tim J. Sobering
124 Burt Hall
Kansas State University
Manhattan, KS 66506-0400

Title: M004: Temperature Monitoring Chan. B

Size	Document Number:	REV
B	HEP008-M004	0.4

Date: 10/22/1998 Page 4 of 27

AKA: FNAL.J009 OR FNAL.J006

M010 = J009 = SHV
M005 = J006 = SHV

Double LEMO connector PCB to faceplate.
Part Number: EPY.00.250.NTN.

W11 and W12 are LEMO connectors.
Pin 1 is the inner pin and Pin 2 the outer 2 pins.

There should be one jumper for W9,W8,W7.
W9 is the most common position; it connects PRIM_GUARD and PRIM_BIAS.
W8 is the next configuration; it connects PRIM_GUARD to the second LEMO connector.
W7 is the rare configuration; it connects P_STOP to the second LEMO.

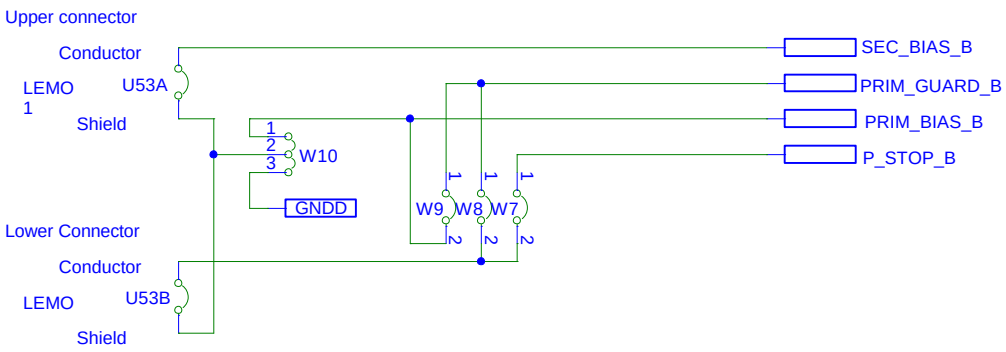

Electronics Design Laboratory

Tim J. Sobering
124 Burt Hall
Kansas State University
Manhattan, KS 66506-0400

Title: M005: Detector Bias Voltage Connector Chan. B

Size	Document Number:	REV
A	HEP008-M005	0.4

Date: 1/22/1999 Page 5 of 27

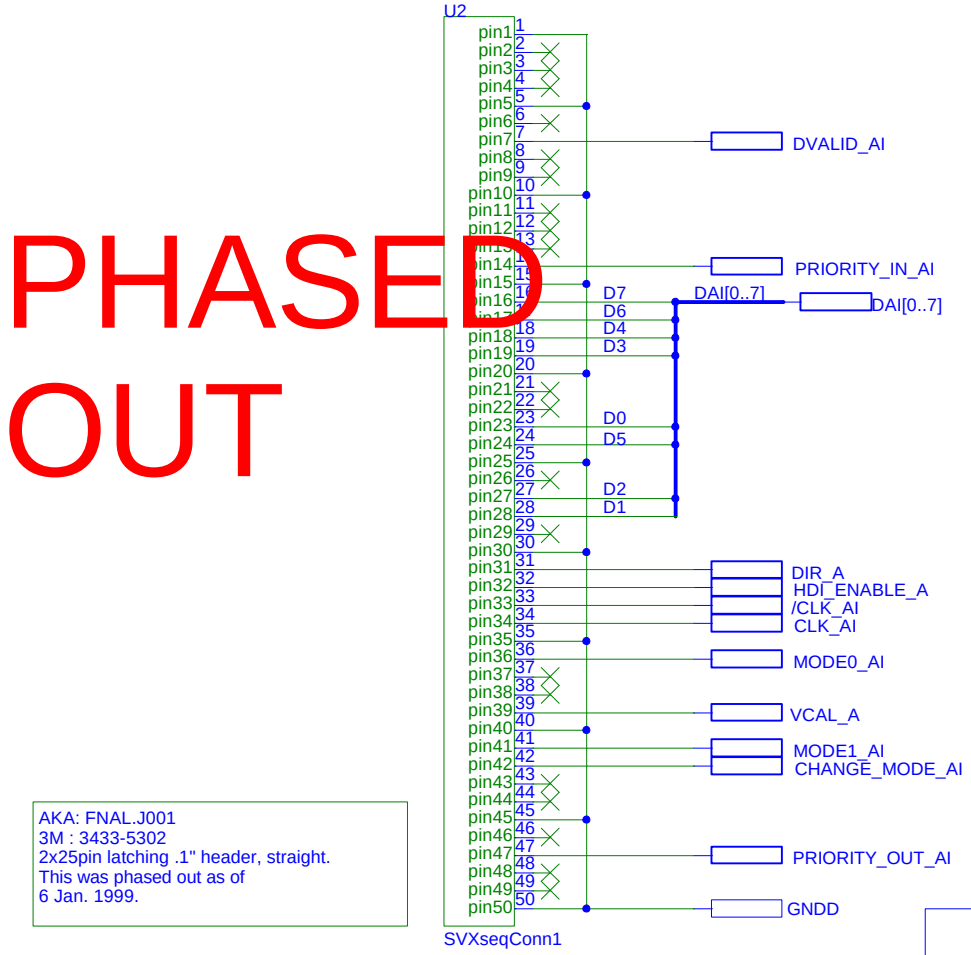

PHASED OUT

AKA: FNAL.J001
3M : 3433-5302
2x25pin latching .1" header, straight.
This was phased out as of
6 Jan. 1999.

Electronics Design Laboratory

Tim J. Sobering
124 Burt Hall
Kansas State University
Manhattan, KS 66506-0400

Title: M006: 3M 0.050 PFRC SVX SEQ. Cable Connector

Size	Document Number:	REV
A	HEP008-M006	0.4

Date: 1/6/99 Page 6 of 27

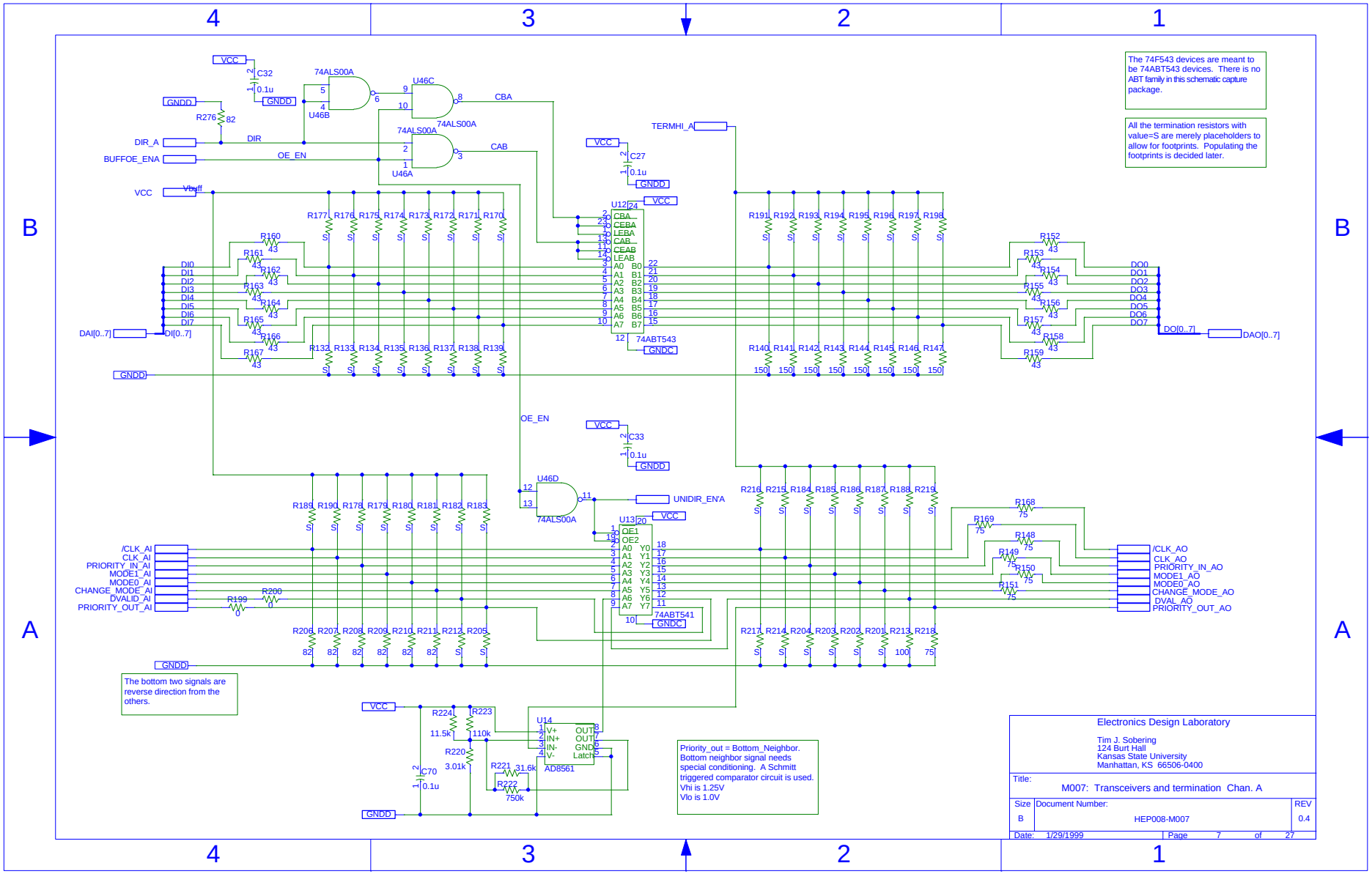
The 74F543 devices are meant to be 74ABT543 devices. There is no ABT family in this schematic capture package.
All the termination resistors with value=S are merely placeholders to allow for footprints. Populating the footprints is decided later.
The bottom two signals are reverse direction from the others.
Priority_out = Bottom_Neighbor. Bottom neighbor signal needs special conditioning. A Schmitt triggered comparator circuit is used. Vhi is 1.25V Vlo is 1.0V
U12 74ABT543
U13 74ABT541
U14 AD8561
U46A U46B U46C U46D 74ALS00A
DI[0..7] DAI[0..7]
DO[0..7] DAO[0..7]
/CLK_AI CLK_AI PRIORITY_IN_AI MODE1_AI MODE0_AI CHANGE_MODE_AI DVALID_AI PRIORITY_OUT_AI
/CLK_AO CLK_AO PRIORITY_IN_AO MODE1_AO MODE0_AO CHANGE_MODE_AO DVAL_AO PRIORITY_OUT_AO
DIR_A BUFFOE_ENA TERMHI_A UNIDIR_EN'A
VCC GNDD GNDC
Electronics Design Laboratory
Tim J. Sobering
124 Burt Hall
Kansas State University
Manhattan, KS 66506-0400
Title: M007: Transceivers and termination Chan. A
Size B
Document Number: HEP008-M007
REV 0.4
Date: 1/29/1999
Page 7 of 27

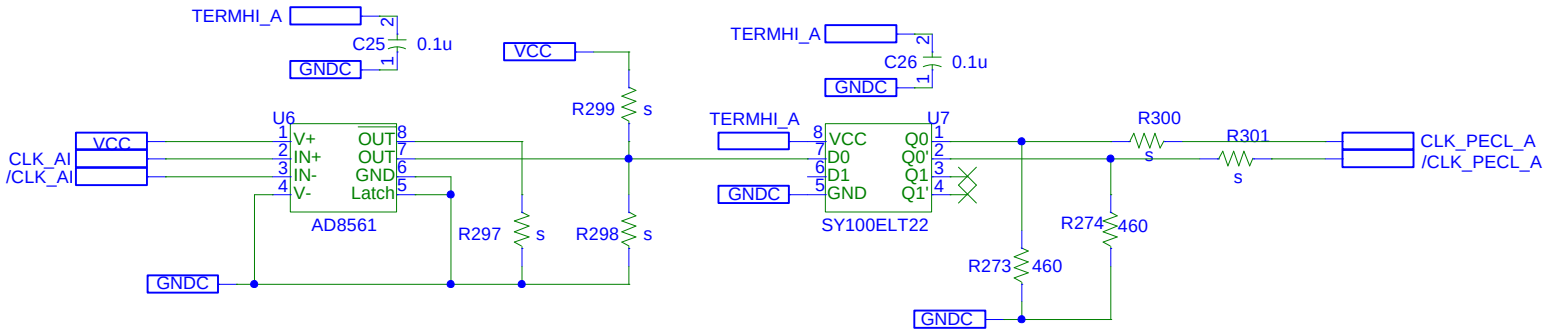

Electronics Design Laboratory

Tim J. Sobering
124 Burt Hall
Kansas State University
Manhattan, KS 66506-0400

Title: M008: Clock Driver Chan. A

Size	Document Number:	REV
A	HEP008-M008	0.4

Date: 1/22/1999 Page 8 of 27

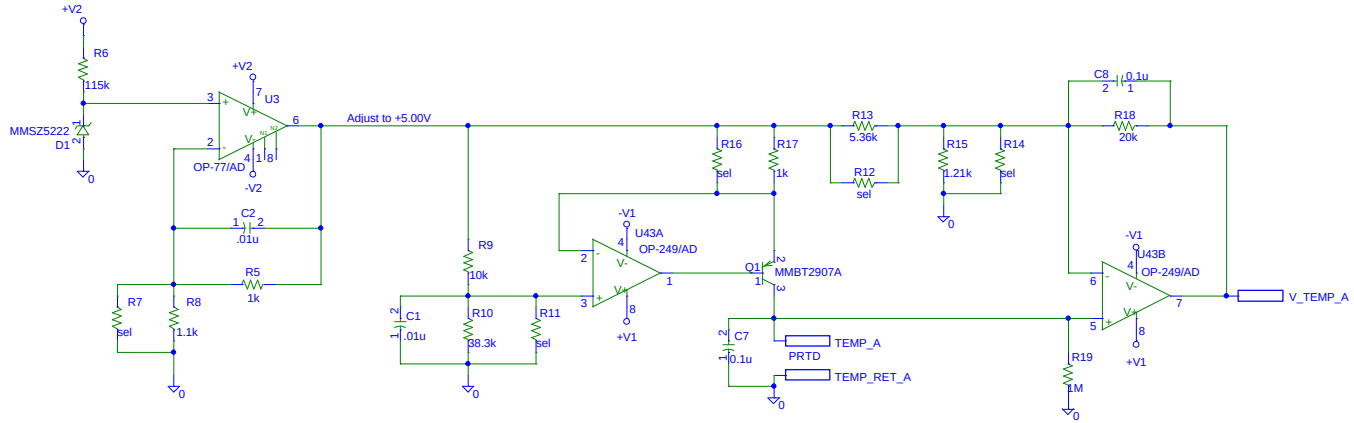

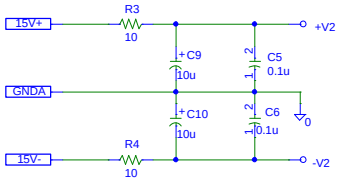

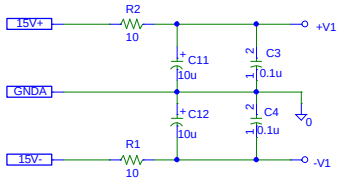

Note:
Temperature sensor is Pt RTD 1kOhm@0deg C.
3.85 deltaOhm / deg C.
Supply should be constant 1mA.

TEMP is one side of the PRTD, the raw temperature voltage ~1v +/-3.85mV/(deg.C).

TEMP_RET is the current-return side.

Notes:

1. Pick a FET in place of Q1 for lower error.
2. Ideal value for R12||R13 is 5.234k
3. Ideal value for R14||R15 is 1.192k
4. Check drive on OP-77
5. Size R6
6. Adjust R16 for 1mA max through thermistor

Electronics Design Laboratory

Tim J. Sobering
124 Burt Hall
Kansas State University
Manhattan, KS 66506-0400

Title: M009: Temperature Monitoring Chan. A

Size	Document Number:	REV
B	HEP008-M009	0.4

Date: 11/02/1998 Page 9 of 27

AKA: FNAL.J009 OR FNAL.J006

M010 = J009 = SHV
M005 = J006 = SHV

Double LEMO connector PCB to faceplate.
Part Number: EPY.00.250.NTN.

W5 and W6 are fixed to the LEMO connector.
Pin 1 is the inner pin and Pin 2 the outer 2 pins.

There should be one jumper for W3,W2,W1.
W3 is the most common position; it connects
PRIM_GUARD and PRIM_BIAS.
W2 is the next configuration; it connects
PRIM_GUARD to the second LEMO connector.
W1 is the rare configuration; it connects
P_STOP to the second LEMO.

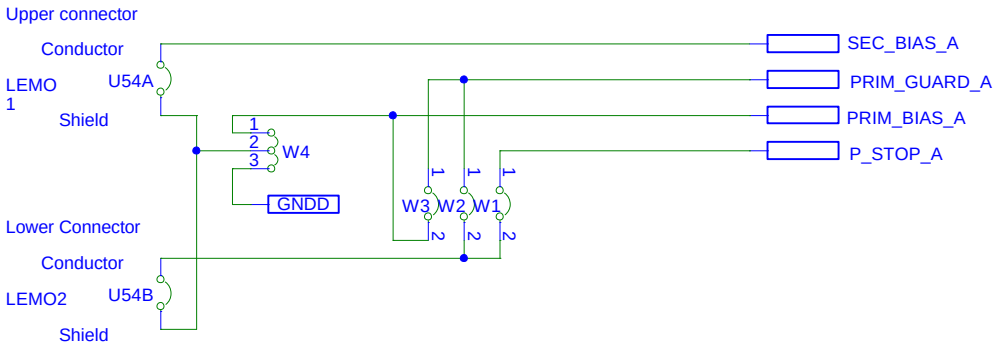

Electronics Design Laboratory

Tim J. Sobering
124 Burt Hall
Kansas State University
Manhattan, KS 66506-0400

Title: M010: Detector Bias Voltage Connector Chan. A

Size	Document Number:	REV
A	HEP008-M010	0.4

Date: 1/22/1999 Page 10 of 27

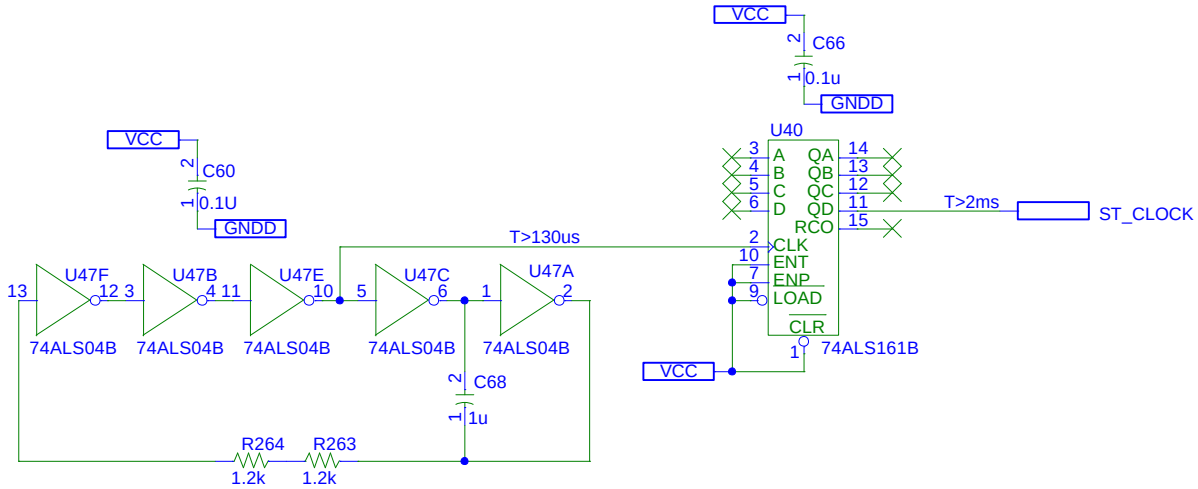

U47 (74ALS04) gates A,B,C, E, and F togethter make an inverter-chain-oscillator.

Electronics Design Laboratory

Tim J. Sobering
124 Burt Hall
Kansas State University
Manhattan, KS 66506-0400

Title: M011: State Machine Clock Generator

Size	Document Number:	REV
A	HEP008-M011	0.4

Date: 10/23/1998 Page 11 of 27

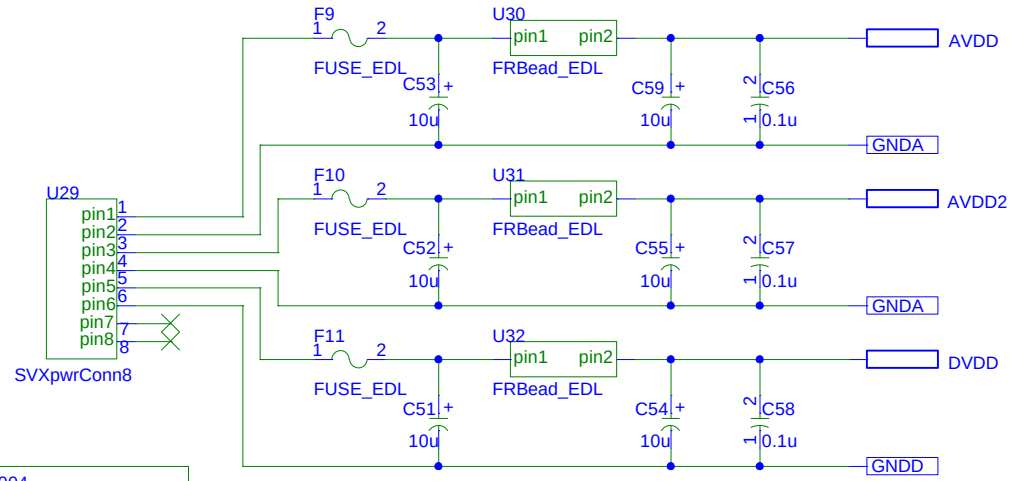

AKA: FNAL.J004
MOLEX : Molex 03-06-2062
Molex 8pin 0.062" Power Connector.
Pins 7 and 8 are not connected.

Electronics Design Laboratory

Tim J. Sobering
124 Burt Hall
Kansas State University
Manhattan, KS 66506-0400

Title: M012: SVX Power Supply Connector

Size	Document Number:	REV
A	HEP008-M012	0.4

Date: 1/26/1999 Page 12 of 27

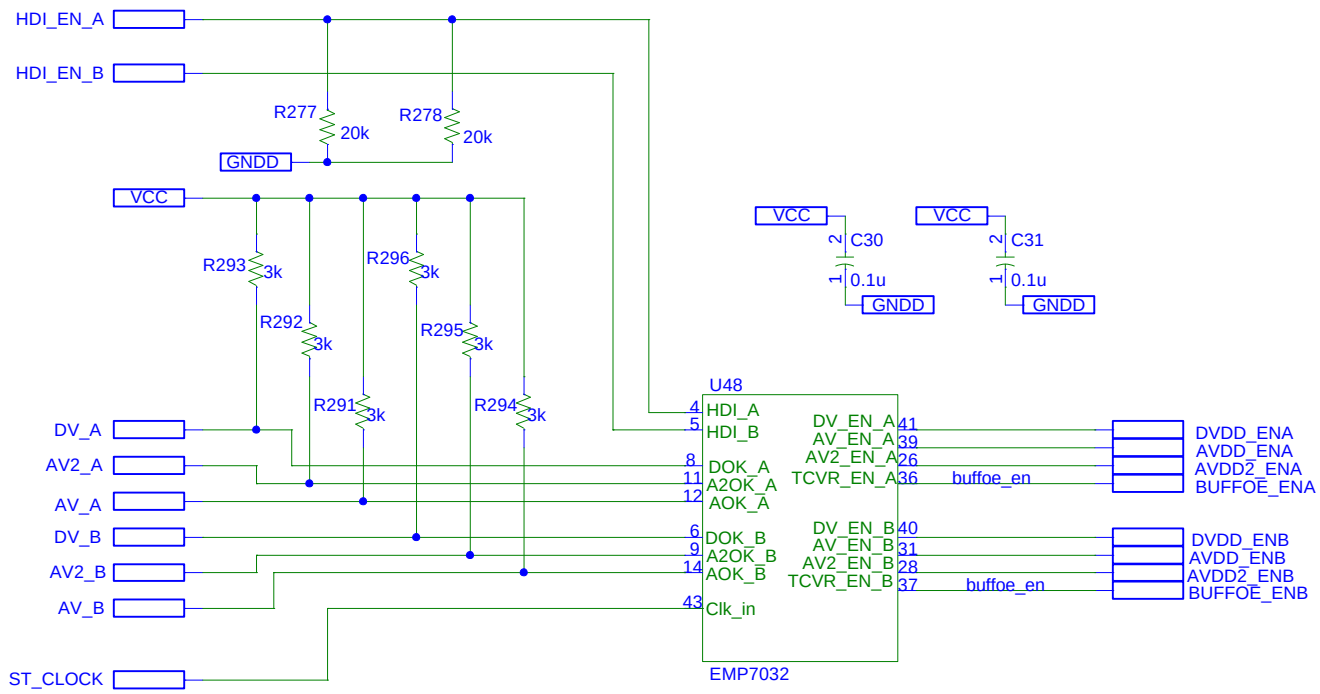

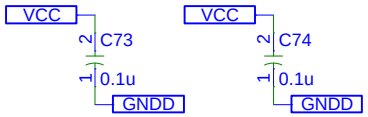

U48 is a 44-pin PLCC (ALTERA). It is to be inserted into a PLCC socket on the board. Attributes and behaviors of the chip can be changed by altering the chip's programming.

Capacitors are for VCC pins 3, 15, 23, and 35 on the Altera chip. Pins 1, 2, 10, 22, 30, 42, and 44 are tied to ground, as programmed by M. Utes.

Also, the enable signals are anticipated to be active high.

Electronics Design Laboratory

Tim J. Sobering
124 Burt Hall
Kansas State University
Manhattan, KS 66506-0400

Title: M013: Power Control

Size	Document Number:	REV
A	HEP008-M013	0.4

Date: 1/26/1999 Page 13 of 27

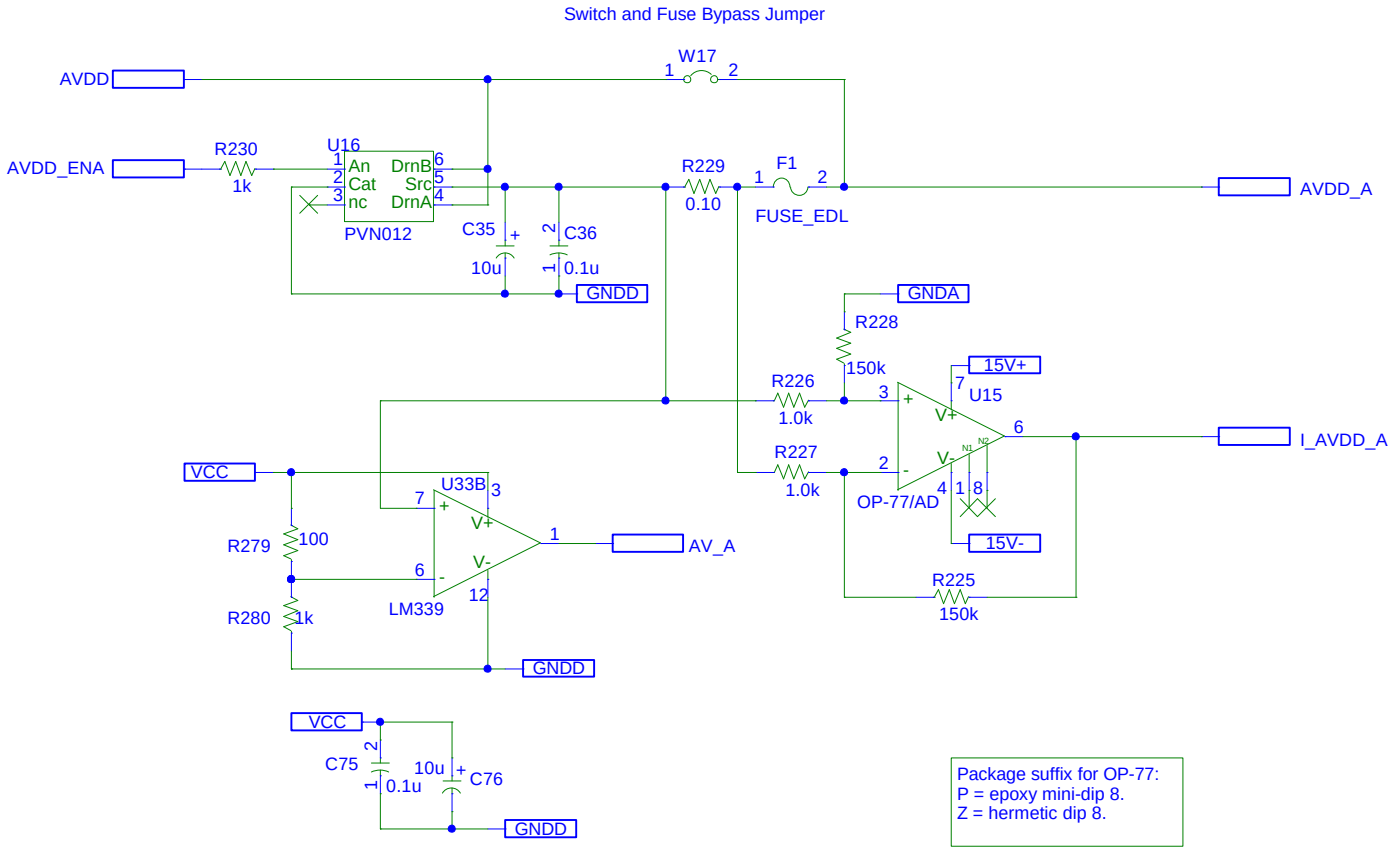

Package suffix for OP-77:
P = epoxy mini-dip 8.
Z = hermetic dip 8.

Low-Ohm Resistor
0.1Ohm Film Chip R

Electronics Design Laboratory

Tim J. Sobering
124 Burt Hall
Kansas State University
Manhattan, KS 66506-0400

Title:
M014: AVDD_A Low Voltage Power Switch & Current Monitoring

Size	Document Number:	REV
A	HEP008-M014	0.4

Date: 1/26/1999 Page 14 of 27

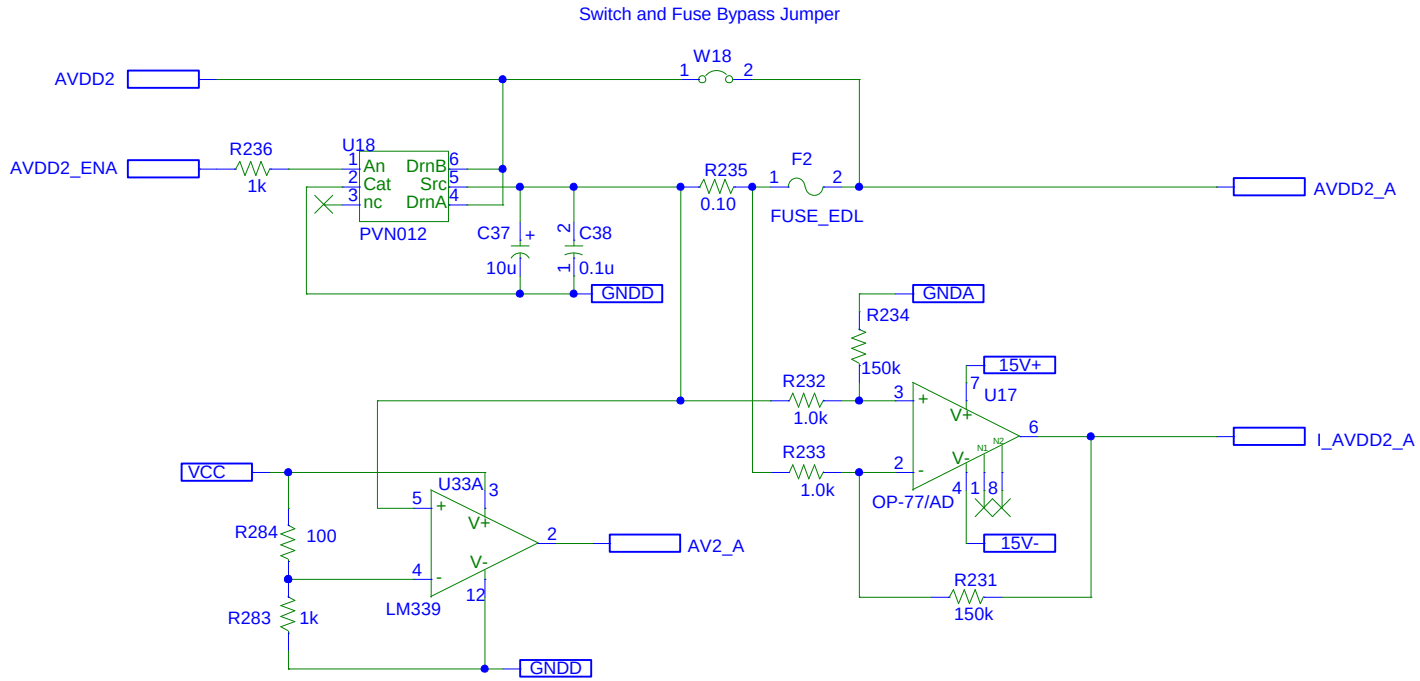

Package suffix for OP-77:
P = epoxy mini-dip 8.
Z = hermetic dip 8.

Low-Ohm Resistor
0.1Ohm Film Chip R

Electronics Design Laboratory

Tim J. Sobering
124 Burt Hall
Kansas State University
Manhattan, KS 66506-0400

Title:
M015: AVDD2_A Low Voltage Power Switch & Current Monitoring

Size	Document Number:	REV
A	HEP008-M015	0.4

Date: 1/26/1999 | Page 15 of 27

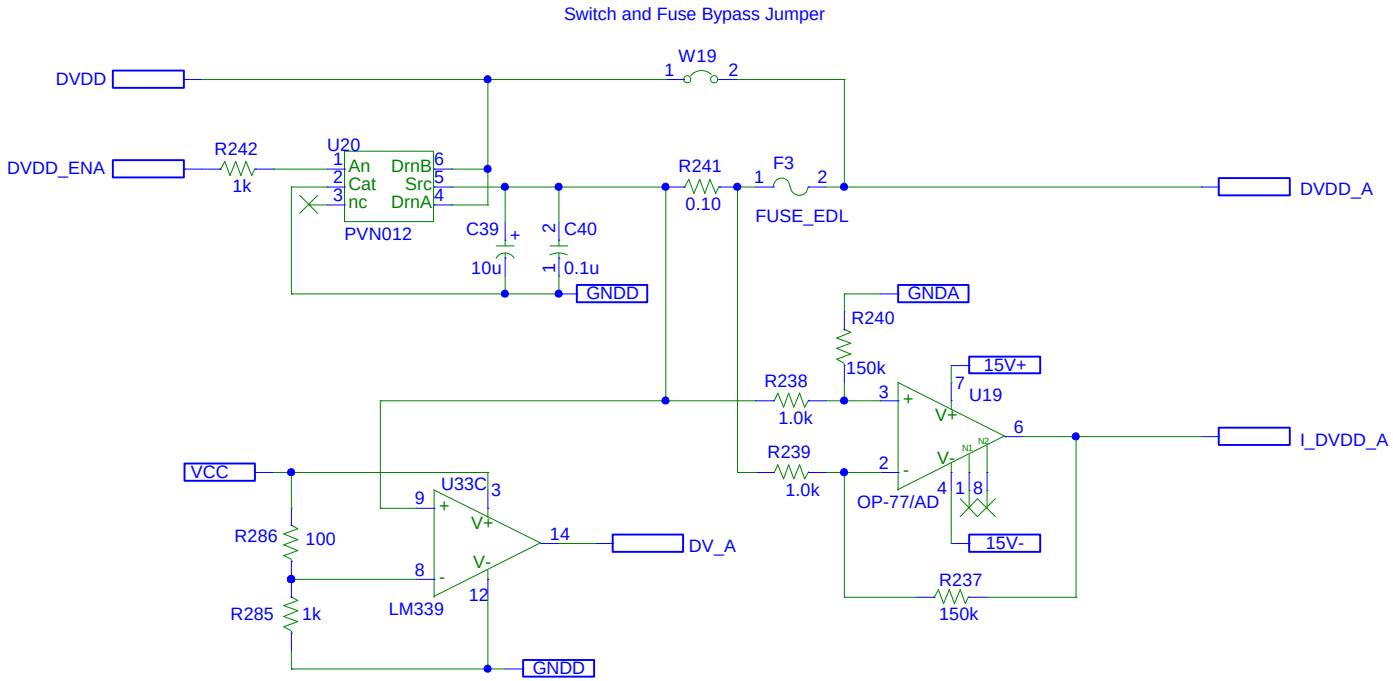

Package suffix for OP-77:
P = epoxy mini-dip 8.
Z = hermetic dip 8.

Low-Ohm Resistor
0.1Ohm Film Chip R

Electronics Design Laboratory

Tim J. Sobering
124 Burt Hall
Kansas State University
Manhattan, KS 66506-0400

Title:
M016: DVDD_A Low Voltage Power Switch & Current Monitoring

Size	Document Number:	REV
A	HEP008-M016	0.4

Date: 1/26/1999 Page 16 of 27

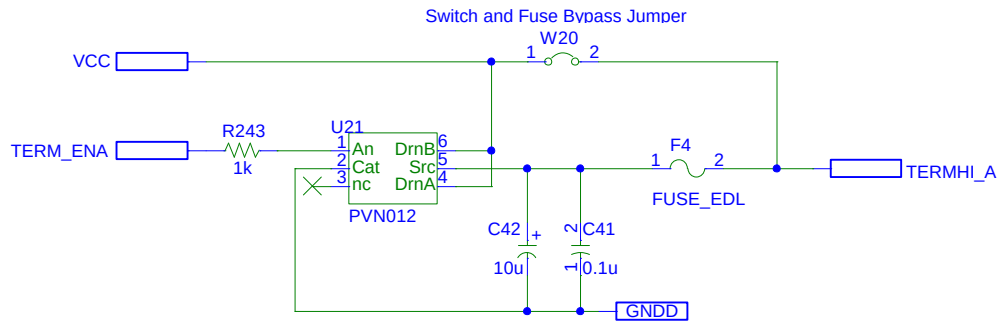

Electronics Design Laboratory

Tim J. Sobering
124 Burt Hall
Kansas State University
Manhattan, KS 66506-0400

Title: M017: Chan. A Low Voltage Power Switching

Size	Document Number:	REV
A	HEP008-M017	0.4

Date: 10/28/1998 Page 17 of 27

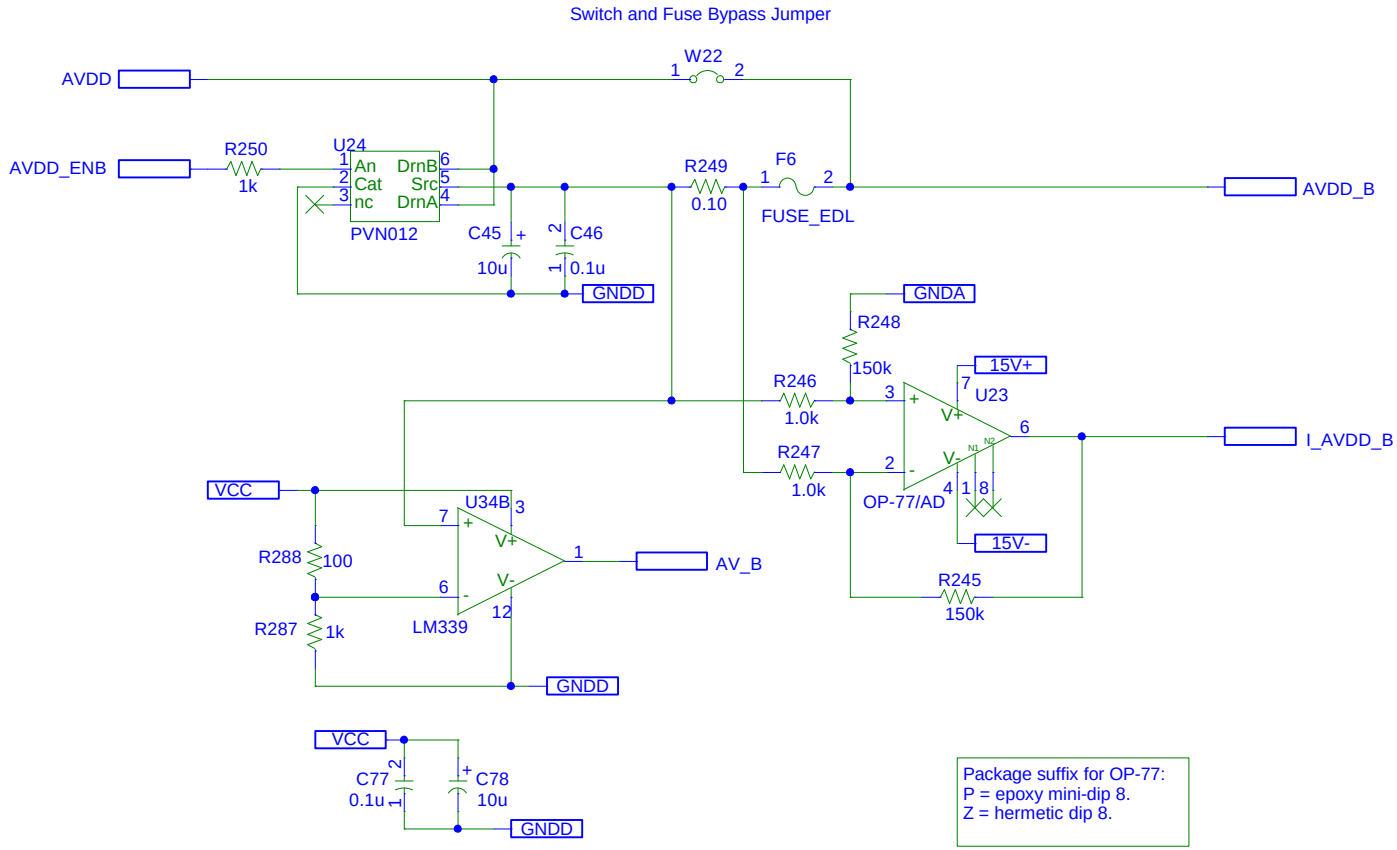

Package suffix for OP-77:
P = epoxy mini-dip 8.
Z = hermetic dip 8.

Low-Ohm Resistor
0.1Ohm Film Chip R

Electronics Design Laboratory

Tim J. Sobering
124 Burt Hall
Kansas State University
Manhattan, KS 66506-0400

Title:
M019: AVDD_B Low Voltage Power Switch & Current Monitoring

Size	Document Number:	REV
A	HEP008-M019	0.4

Date: 1/26/1999 | Page 18 of 27

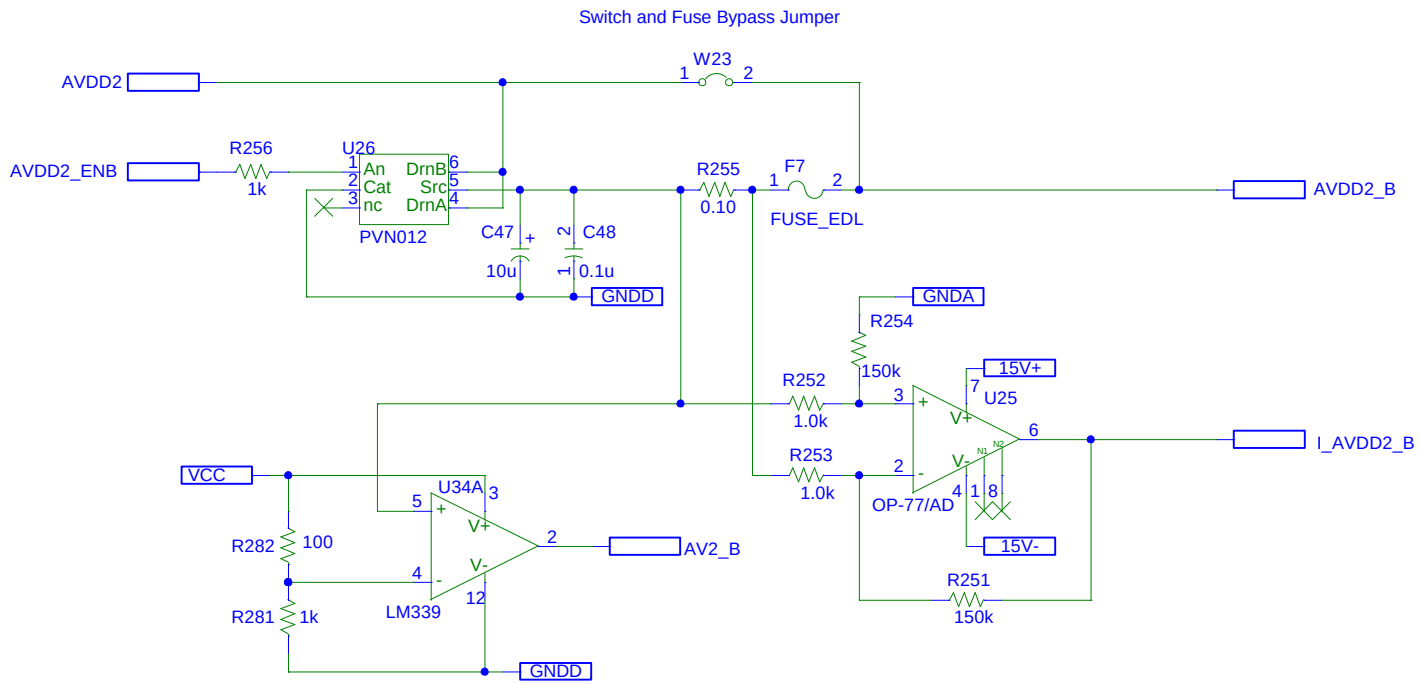

Package suffix for OP-77:
P = epoxy mini-dip 8.
Z = hermetic dip 8.

Low-Ohm Resistor
0.1Ohm Film Chip R

Electronics Design Laboratory

Tim J. Sobering
124 Burt Hall
Kansas State University
Manhattan, KS 66506-0400

Title:
M020: AVDD2_B Low Voltage Power Switch & Current Monitoring

Size	Document Number:	REV
A	HEP008-M020	0.4

Date: 1/26/1999 | Page 19 of 27

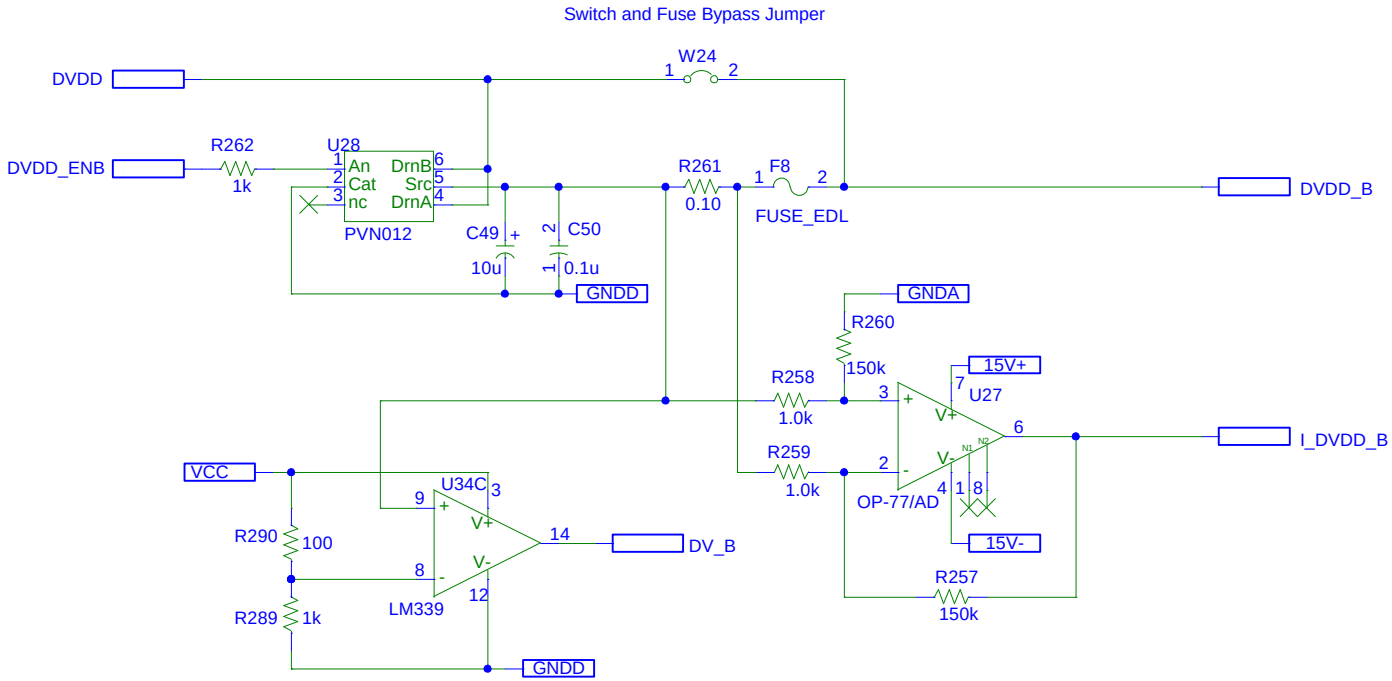

Package suffix for OP-77:
P = epoxy mini-dip 8.
Z = hermetic dip 8.

Low-Ohm Resistor
0.1Ohm Film Chip R

Electronics Design Laboratory

Tim J. Sobering
124 Burt Hall
Kansas State University
Manhattan, KS 66506-0400

Title:
M021: DVDD_B Low Voltage Power Switch & Current Monitoring

Size	Document Number:	REV
A	HEP008-M021	0.4

Date: 1/26/1999 | Page 20 of 27

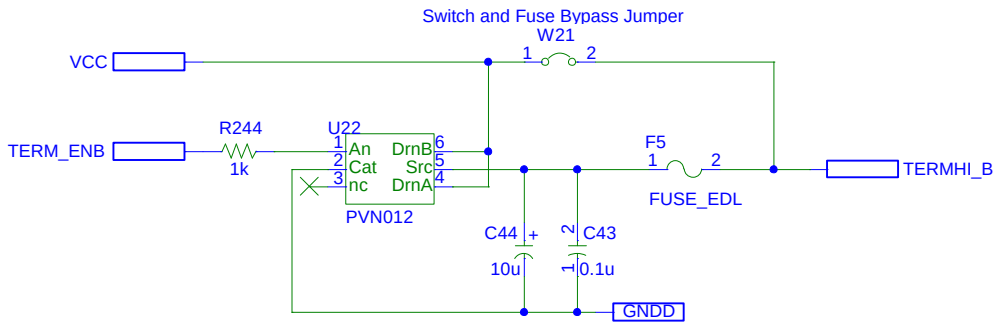

Electronics Design Laboratory

Tim J. Sobering
124 Burt Hall
Kansas State University
Manhattan, KS 66506-0400

Title: M022: Chan. B Low Voltage Power Switching

Size	Document Number:	REV
A	HEP008-M022	0.4

Date: 10/28/1998 Page 21 of 27

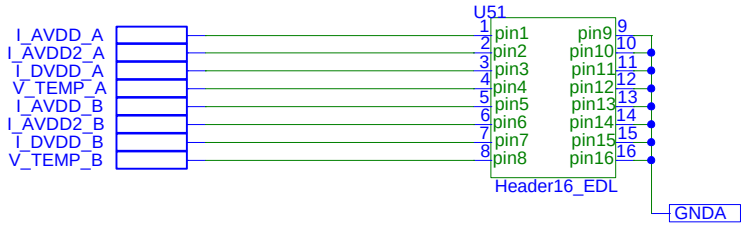

AKA: FNAL.J007
old: 3M: 3431-5302
new: 3M 2516-6002

2x8 pin 0.1", straight
low-profile header.

Connect to panel plug
connector 3M 4616-6000.

Connector changed to
eliminate HV-monitor
signals.

Electronics Design Laboratory

Tim J. Sobering
124 Burt Hall
Kansas State University
Manhattan, KS 66506-0400

Title:
M023: Twist and Flat Monitor Cable Connector

Size	Document Number:	REV
A	HEP008-M023	0.4

Date: 10/23/1998 Page 22 of 27

This pin assignment is based on suggestion from Noel Stanton. (email 07/16/1998)

Signal side

Drain/shield side

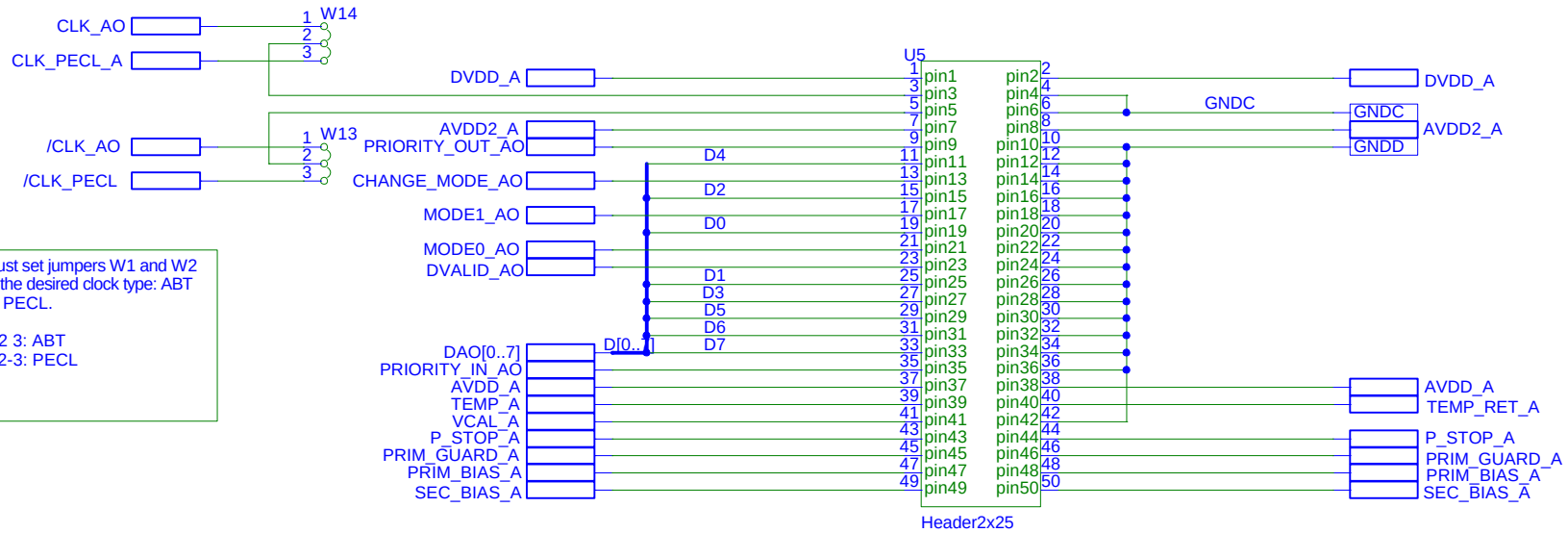

Must set jumpers W1 and W2 to the desired clock type: ABT or PECL.

1-2 3: ABT
1 2-3: PECL

Use AMP coax 0.1" ribbon with positive locking connector and signal-side up on both ends (crossover termination).

AKA: FNAL.J008 and/or FNAL.J002
Receptacles:
M024 = J008 = 3M: 3433-5302
M025 = J002 = 3M: 3433-5302

2x25pin 0.1", right angle, latching receptacle

Electronics Design Laboratory

Tim J. Sobering
124 Burt Hall
Kansas State University
Manhattan, KS 66506-0400

Title: M024: Chan. A SVX Interface Connector 3

Size	Document Number:	REV
A	HEP008-M024	0.4

Date: 1/11/1999 Page 23 of 27

This pin assignment is based on suggestion from Noel Stanton. (email 07/16/1998)

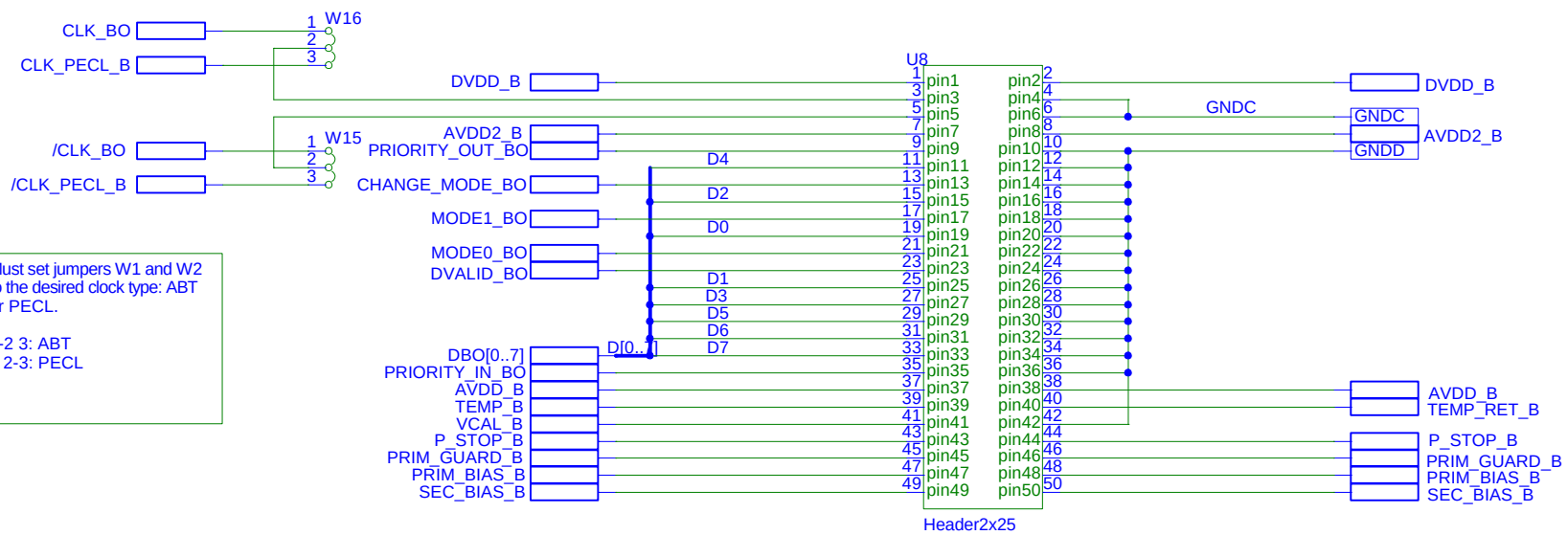

Must set jumpers W1 and W2 to the desired clock type: ABT or PECL.

1-2 3: ABT
1 2-3: PECL

Use AMP coax 0.1" ribbon with positive locking connector and signal-side up on both ends (crossover termination).

AKA: FNAL.J008 and/or FNAL.J002
Receptacles:
M024 = J008 = 3M: 3433-5302
M025 = J002 = 3M: 3433-5302

2x25pin 0.1", right angle, latching receptacle

Electronics Design Laboratory

Tim J. Sobering
124 Burt Hall
Kansas State University
Manhattan, KS 66506-0400

Title: M025: Chan. B SVX Interface Connector 3

Size	Document Number:	REV
A	HEP008-M025	0.4

Date: 1/11/1999 Page 24 of 27

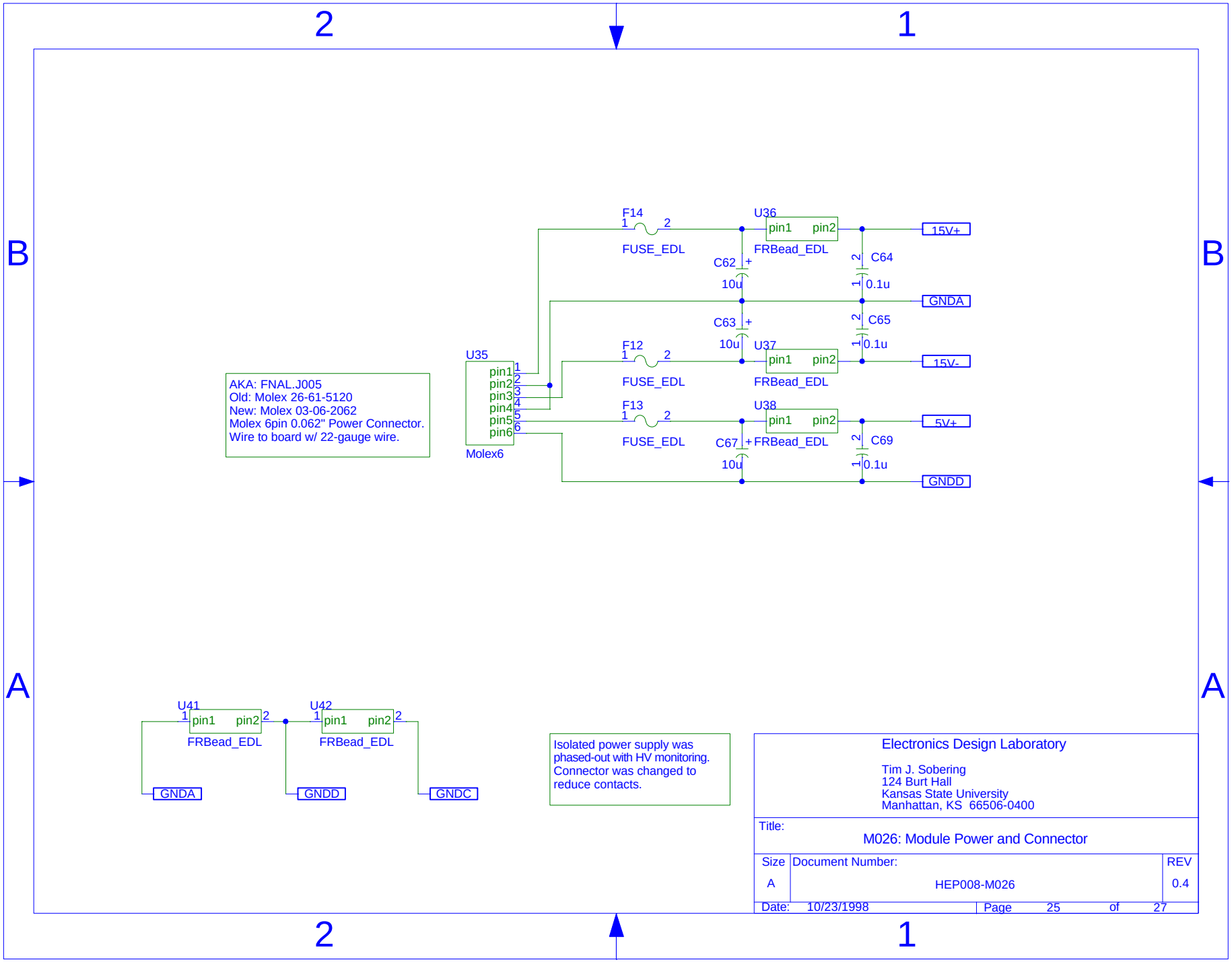
2
1
B
A
F14
1
2
FUSE_EDL
U36
pin1
pin2
FRBead_EDL
15V+
C62
+
10u
C64
0.1u
GNDA
C63
+
10u
C65
0.1u
U35
pin1
pin2
pin3
pin4
pin5
pin6
Molex6
F12
FUSE_EDL
U37
FRBead_EDL
15V-
F13
FUSE_EDL
U38
FRBead_EDL
5V+
C67
10u
C69
0.1u
GNDD
AKA: FNAL.J005
Old: Molex 26-61-5120
New: Molex 03-06-2062
Molex 6pin 0.062" Power Connector.
Wire to board w/ 22-gauge wire.
U41
FRBead_EDL
GNDA
U42
FRBead_EDL
GNDD
GNDC
Isolated power supply was phased-out with HV monitoring. Connector was changed to reduce contacts.
Electronics Design Laboratory
Tim J. Sobering
124 Burt Hall
Kansas State University
Manhattan, KS 66506-0400
Title:
M026: Module Power and Connector
Size
A
Document Number:
HEP008-M026
REV
0.4
Date: 10/23/1998
Page 25 of 27

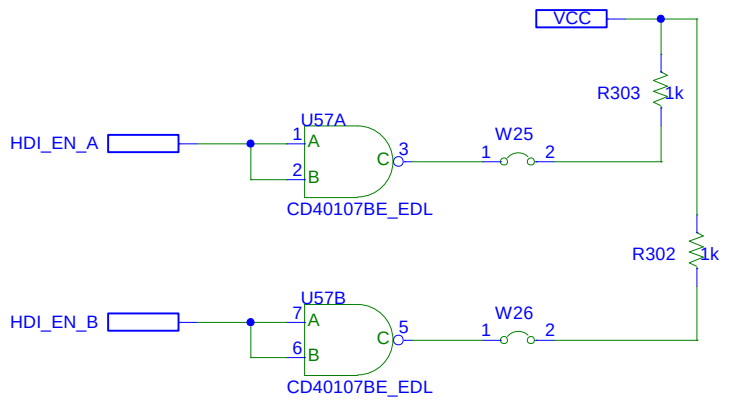

LEDs on panel are to be wired to the jumpers. The cathode of the LED is to be wired to pin 1 on the jumpers.

Electronics Design Laboratory

Tim J. Sobering
124 Burt Hall
Kansas State University
Manhattan, KS 66506-0400

Title: M027: Power Indicators

Size	Document Number:	REV
A	HEP008-M027	0.0

Date: 1/28/1999 Page 26 of 27

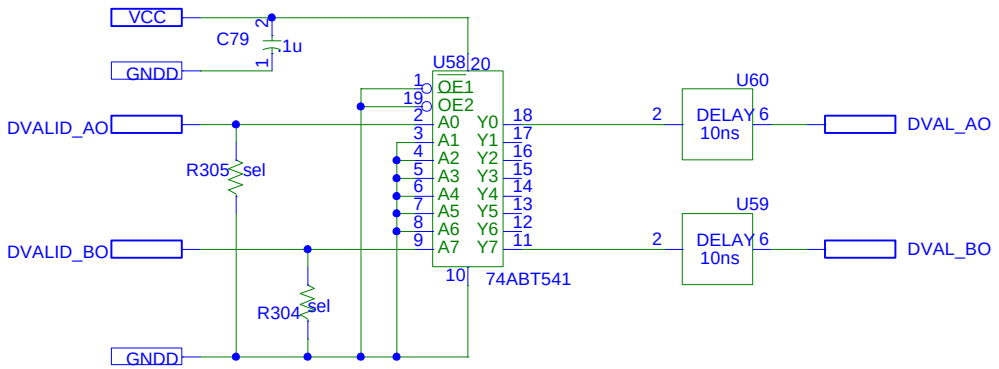

U59 and U60 are SIP delay lines
from Data Delay Devices.
Part Number: 1513-10B
Pins 1 and 7 are connected to
ground.

Electronics Design Laboratory

Tim J. Sobering
124 Burt Hall
Kansas State University
Manhattan, KS 66506-0400

Title: M028: Delay Circuit

Size	Document Number:	REV
A	HEP008-M028	0.0

Date: 1/29/1999 Page 27 of 27