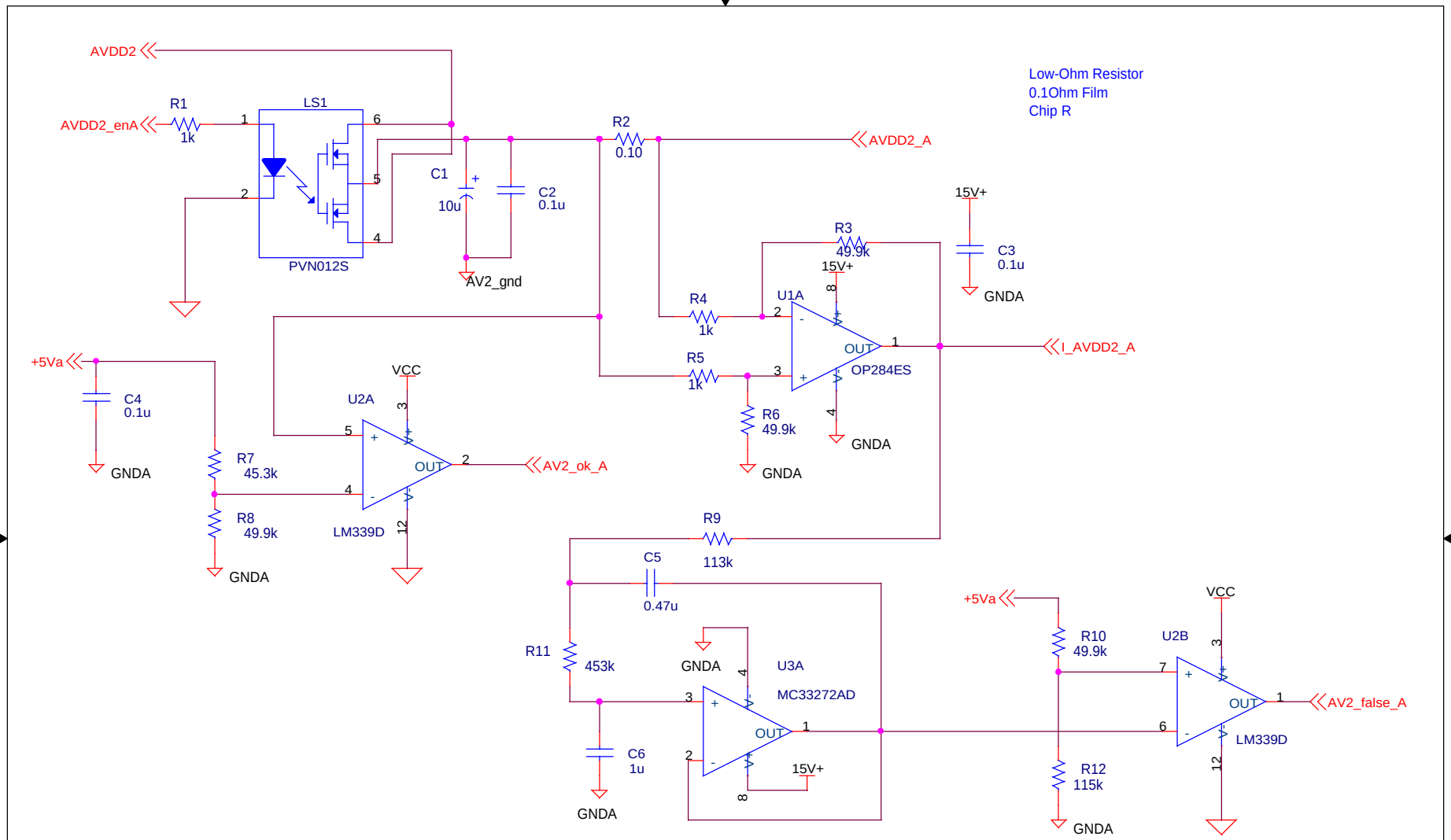

Sallen and Key 10 Hz. filter

Electronics Design Laboratory

Tim J. Sobering
124 Burt Hall
Kansas State University
Manhattan, KS 66506-0400

Title: Chan. A: AVDD2 Low Voltage Power Switch & Current Monitoring

Size	Document Number:	REV
A	HEP008-M015	0.4

Date: 8/6/99 Page 14 of 26

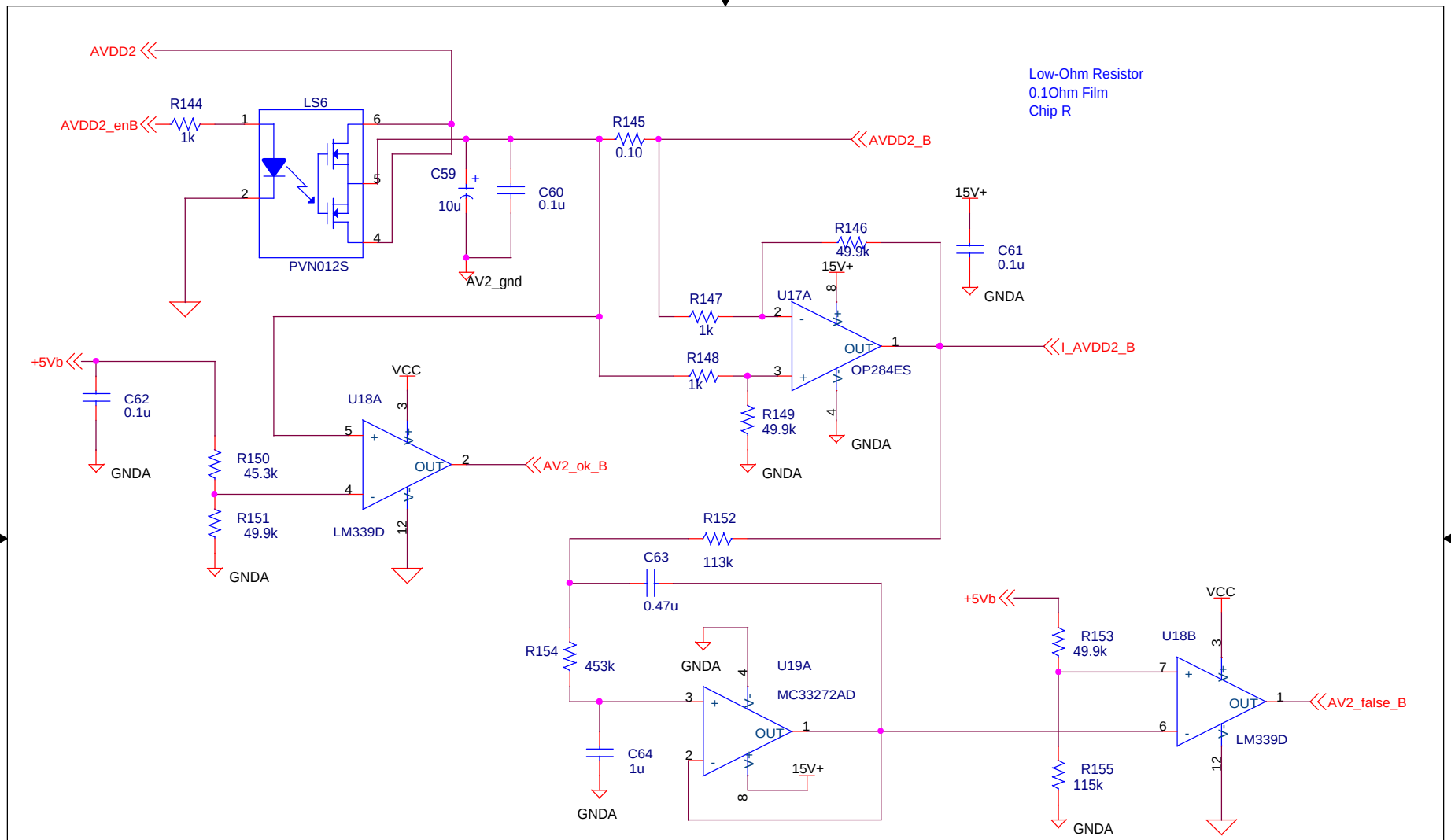

Electronics Design Laboratory

Tim J. Sobering
124 Burt Hall
Kansas State University
Manhattan, KS 66506-0400

Title: Chan. B: AVDD2 Low Voltage Power Switch & Current Monitoring

Size	Document Number:	REV
A	HEP008-M015	0.4

Date: 8/6/99 Page 14 of 26

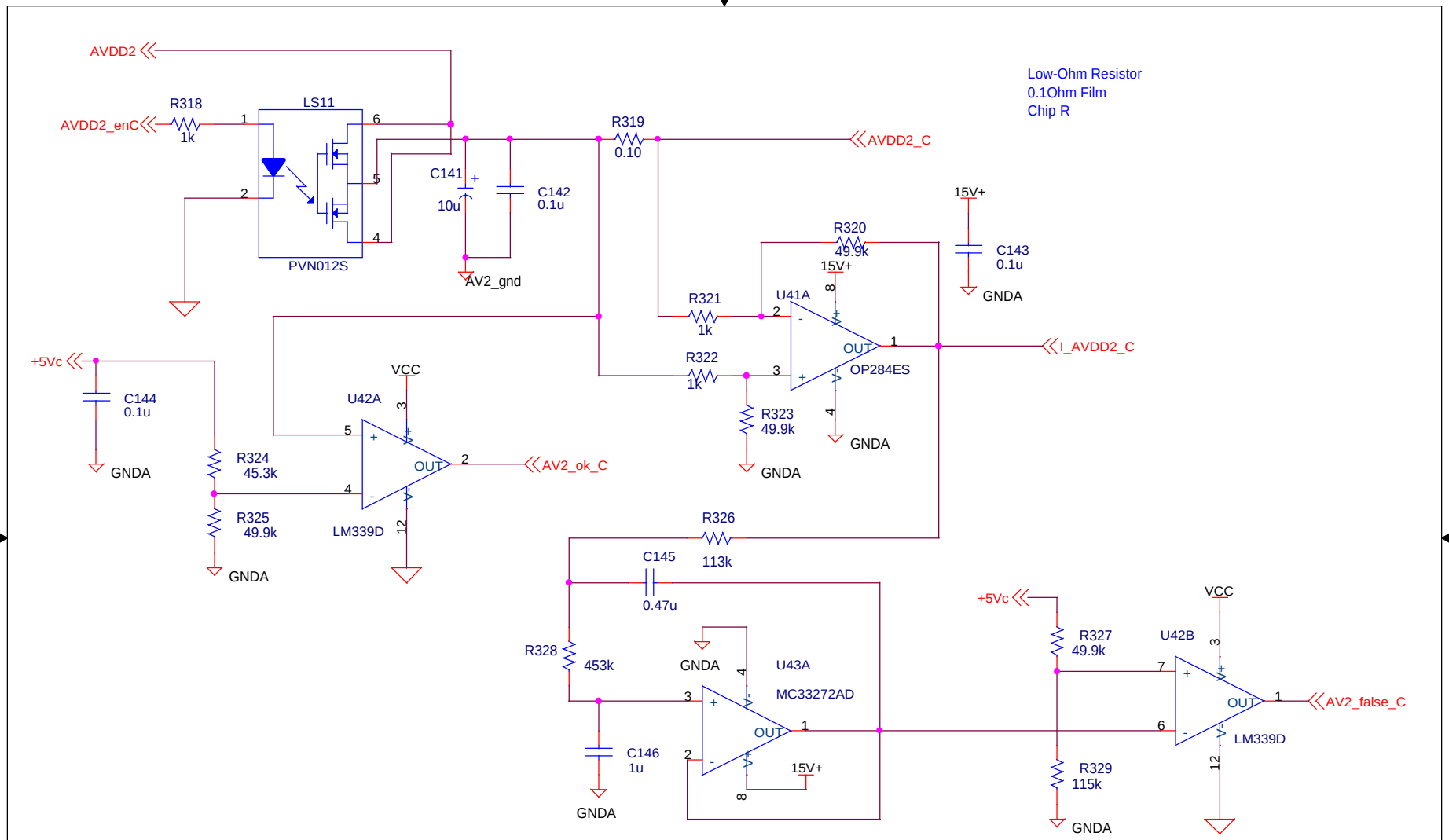

Sallen and Key 10 Hz. filter

Electronics Design Laboratory

Tim J. Sobering
124 Burt Hall
Kansas State University
Manhattan, KS 66506-0400

Title:
Chan. C: AVDD2 Low Voltage Power Switch & Current Monitoring

Size	Document Number:	REV
A	HEP008-M015	0.4

Date: 9/27/99 Page 14 of 26

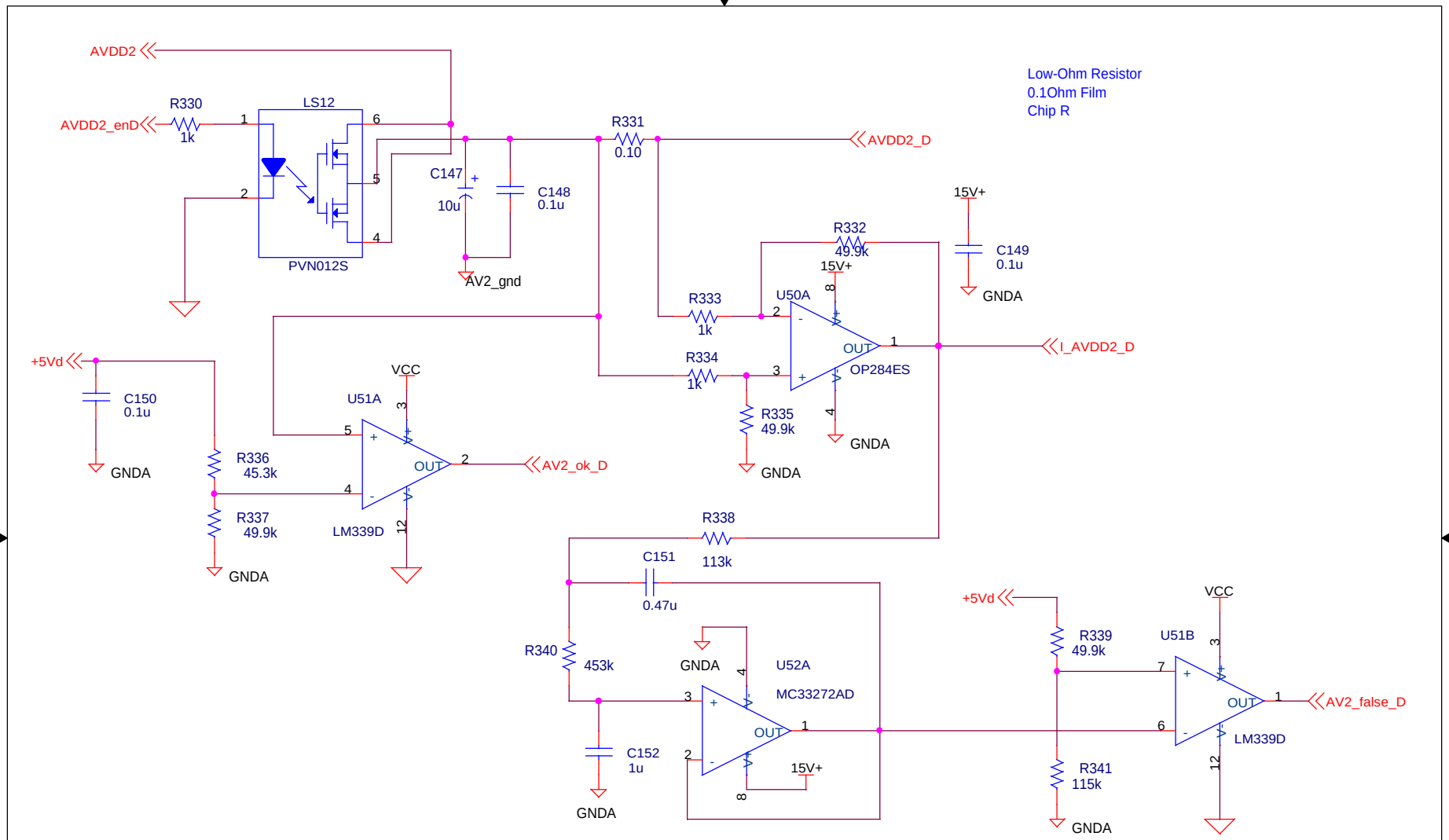

Sallen and Key 10 Hz. filter

Electronics Design Laboratory

Tim J. Sobering
124 Burt Hall
Kansas State University
Manhattan, KS 66506-0400

Title: Chan. D: AVDD2 Low Voltage Power Switch & Current Monitoring

Size	Document Number:	REV
A	HEP008-M015	0.4

Date: 9/27/99 Page 14 of 26

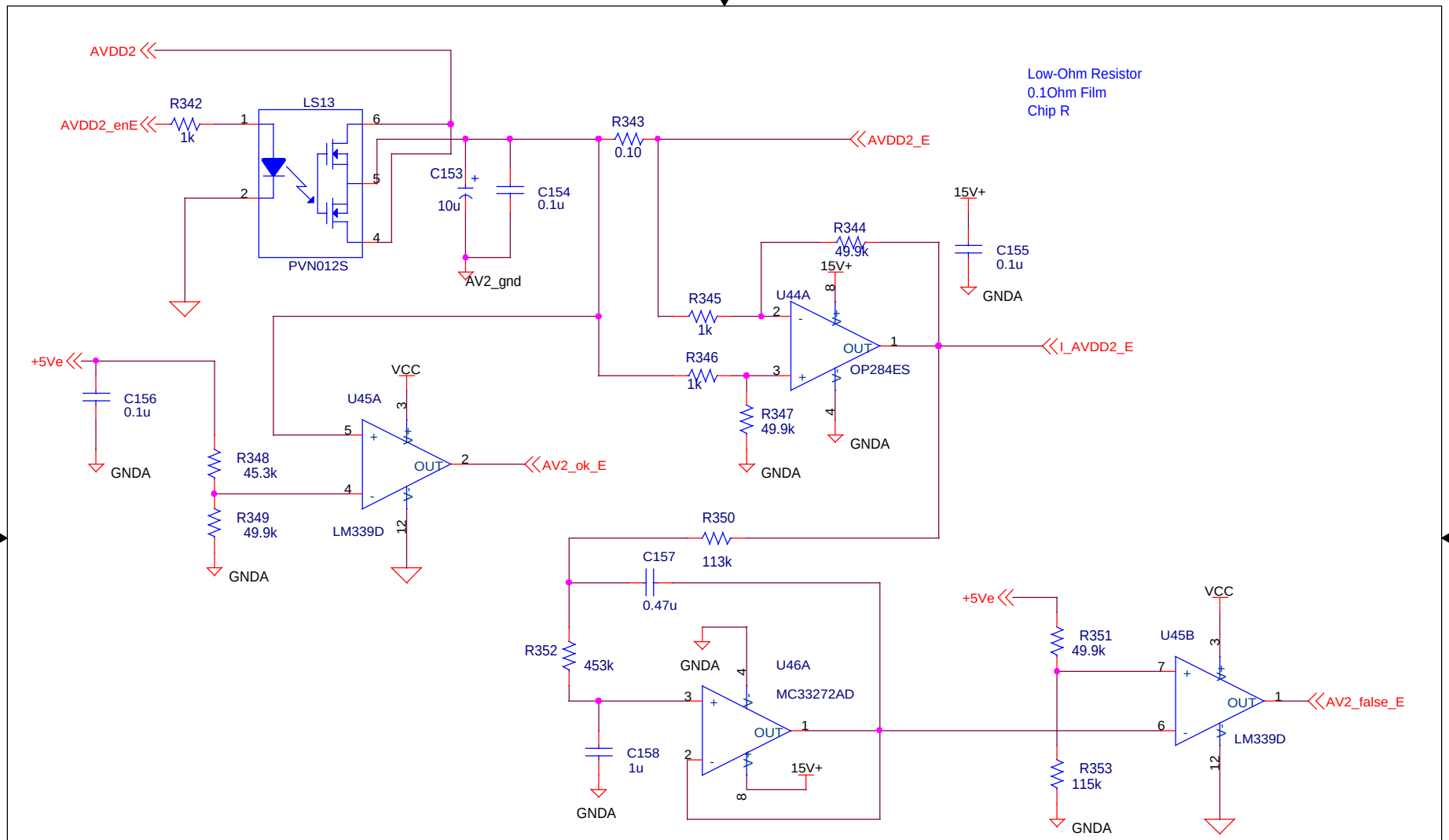

Sallen and Key 10 Hz. filter

Electronics Design Laboratory

Tim J. Sobering
124 Burt Hall
Kansas State University
Manhattan, KS 66506-0400

Title:
Chan. E: AVDD2 Low Voltage Power Switch & Current Monitoring

Size	Document Number:	REV
A	HEP008-M015	0.4

Date: 9/27/99 Page 14 of 26

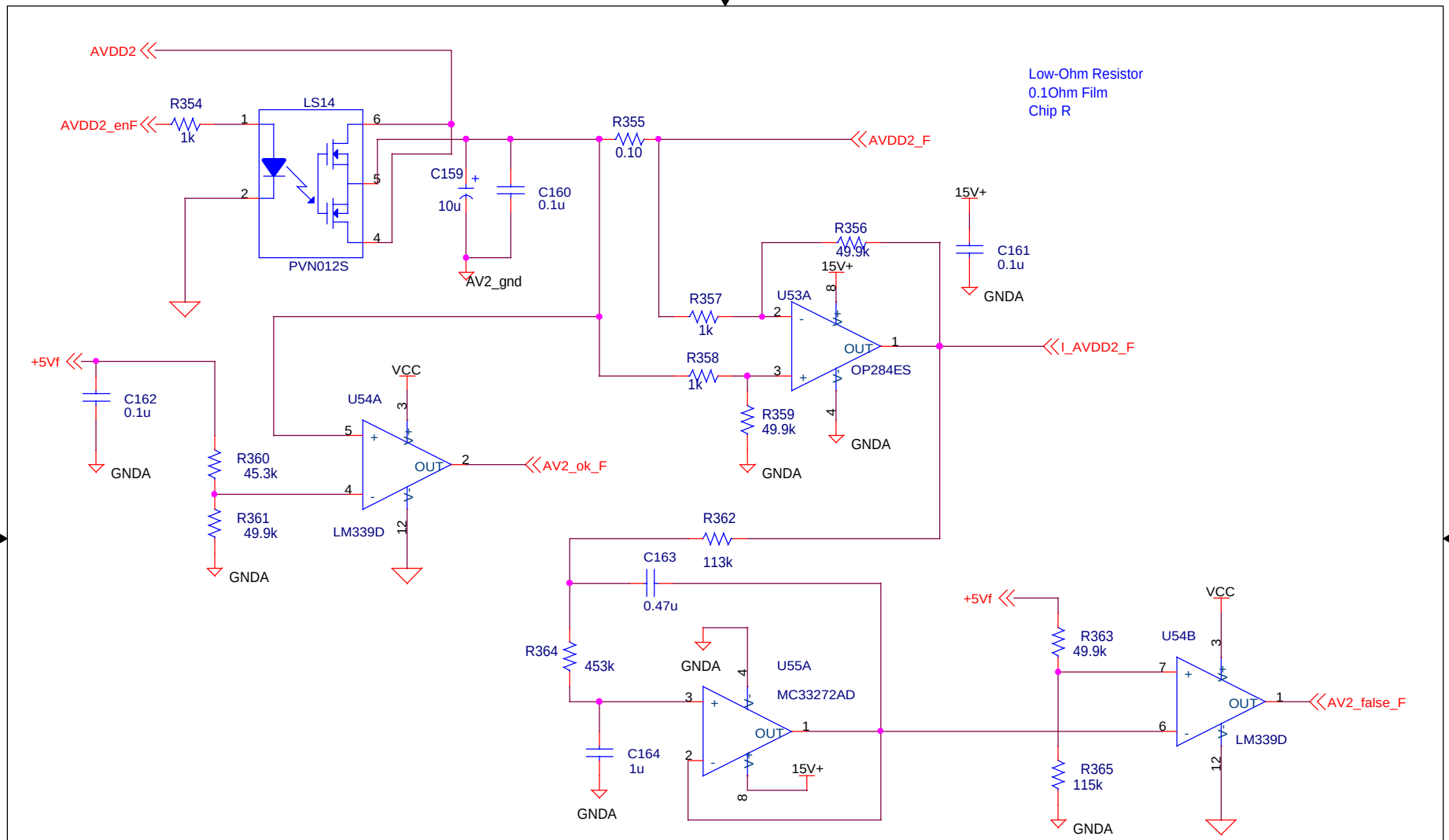

Sallen and Key 10 Hz. filter

Electronics Design Laboratory

Tim J. Sobering
124 Burt Hall
Kansas State University
Manhattan, KS 66506-0400

Title:
Chan. F: AVDD2 Low Voltage Power Switch & Current Monitoring

Size	Document Number:	REV
A	HEP008-M015	0.4

Date: 9/27/99 | Page 14 of 26

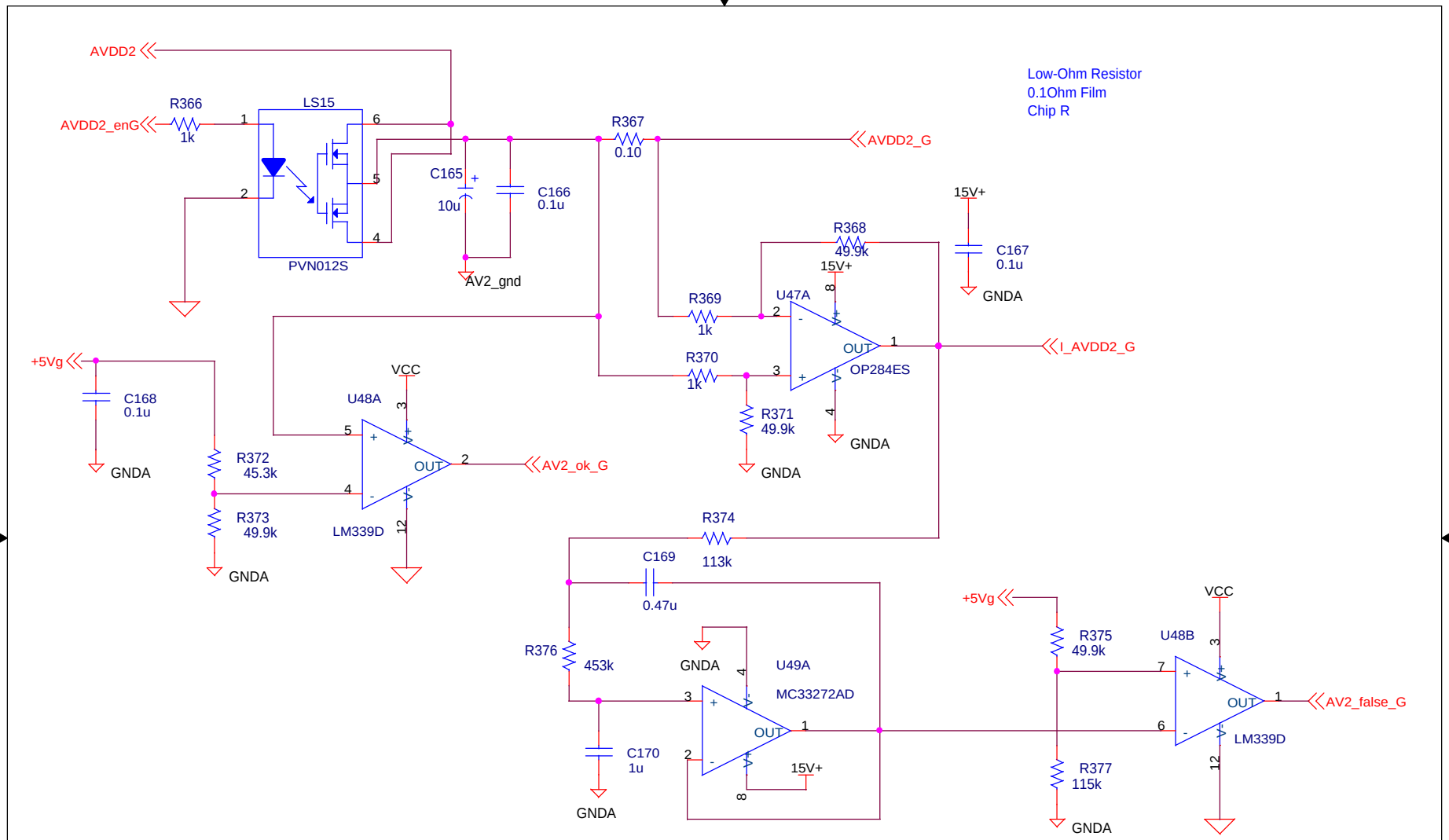

Sallen and Key 10 Hz. filter

Electronics Design Laboratory

Tim J. Sobering
124 Burt Hall
Kansas State University
Manhattan, KS 66506-0400

Title:
Chan. G: AVDD2 Low Voltage Power Switch & Current Monitoring

Size	Document Number:	REV
A	HEP008-M015	0.4

Date: 9/27/99 | Page 14 of 26

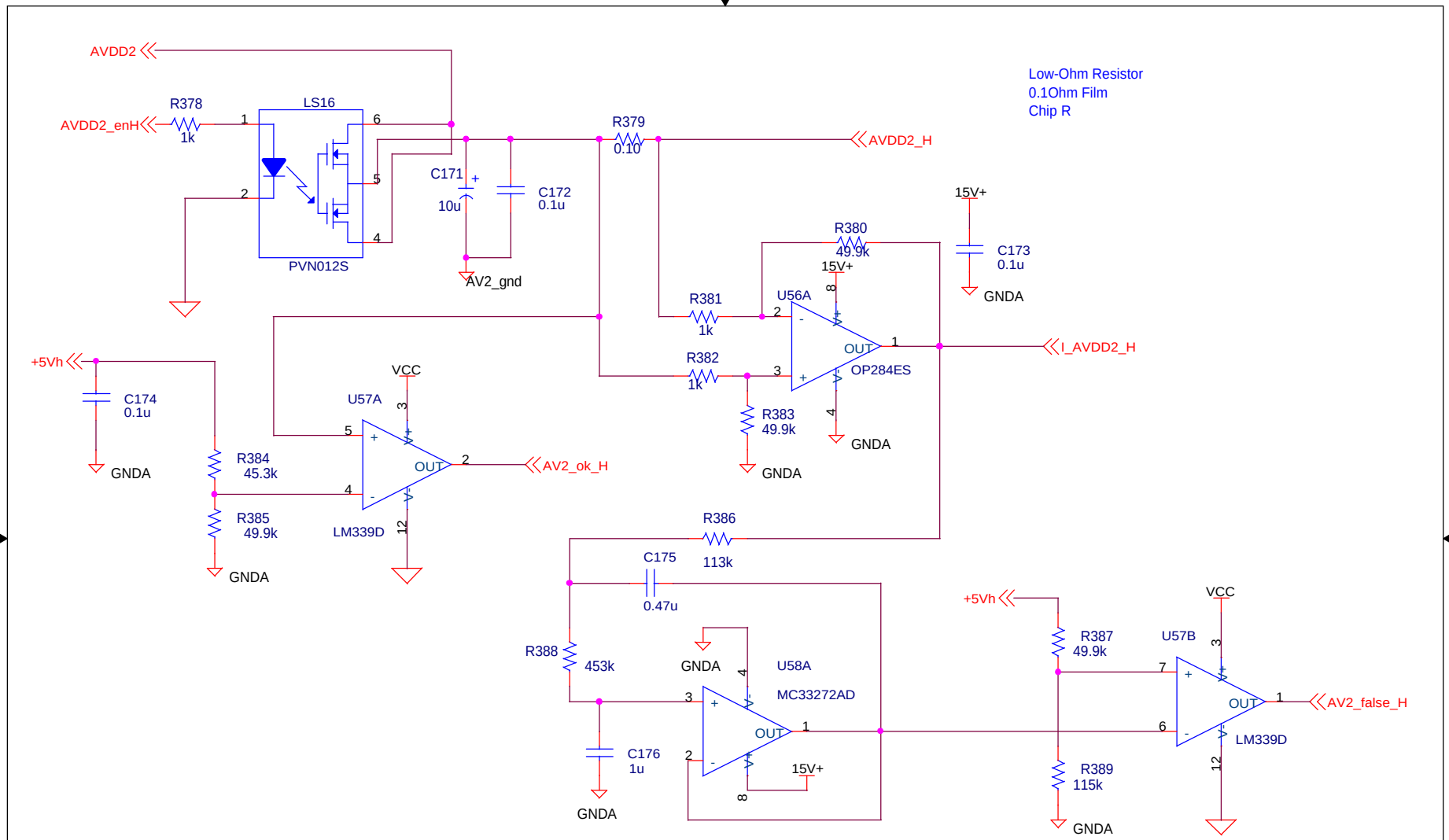

Sallen and Key 10 Hz. filter

Electronics Design Laboratory

Tim J. Sobering
124 Burt Hall
Kansas State University
Manhattan, KS 66506-0400

Title:
Chan. H: AVDD2 Low Voltage Power Switch & Current Monitoring

Size	Document Number:	REV
A	HEP008-M015	0.4

Date: 9/27/99 | Page 14 of 26

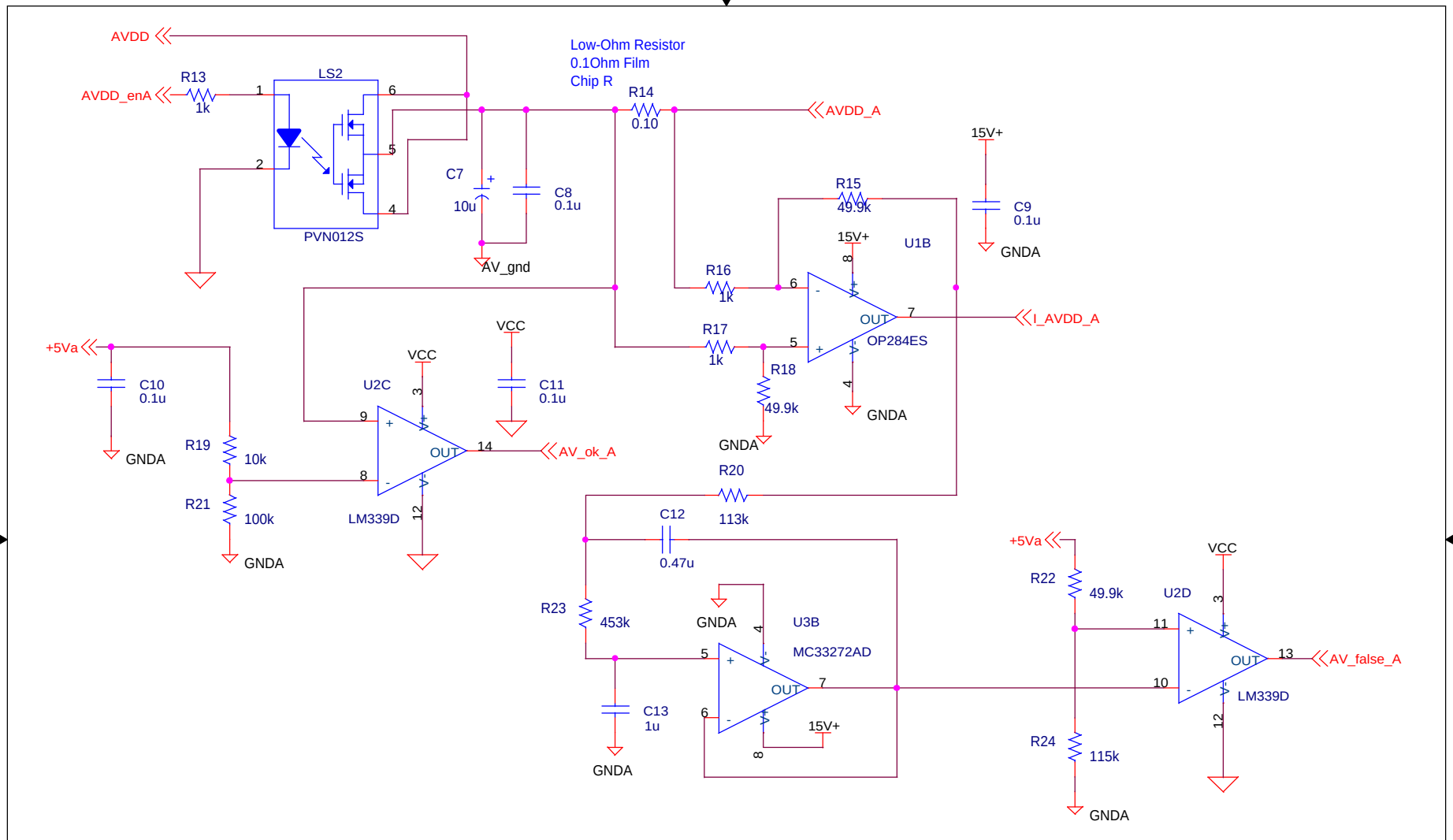

Sallen and Key 10 Hz . filter

Electronics Design Laboratory

Tim J. Sobering
124 Burt Hall
Kansas State University
Manhattan, KS 66506-0400

Title:
Chan. A: AVDD Low Voltage Power Switch & Current Monitoring

Size	Document Number:	REV
A	HEP008-M014	0.4

Date: 8/6/99 Page 14 of 26

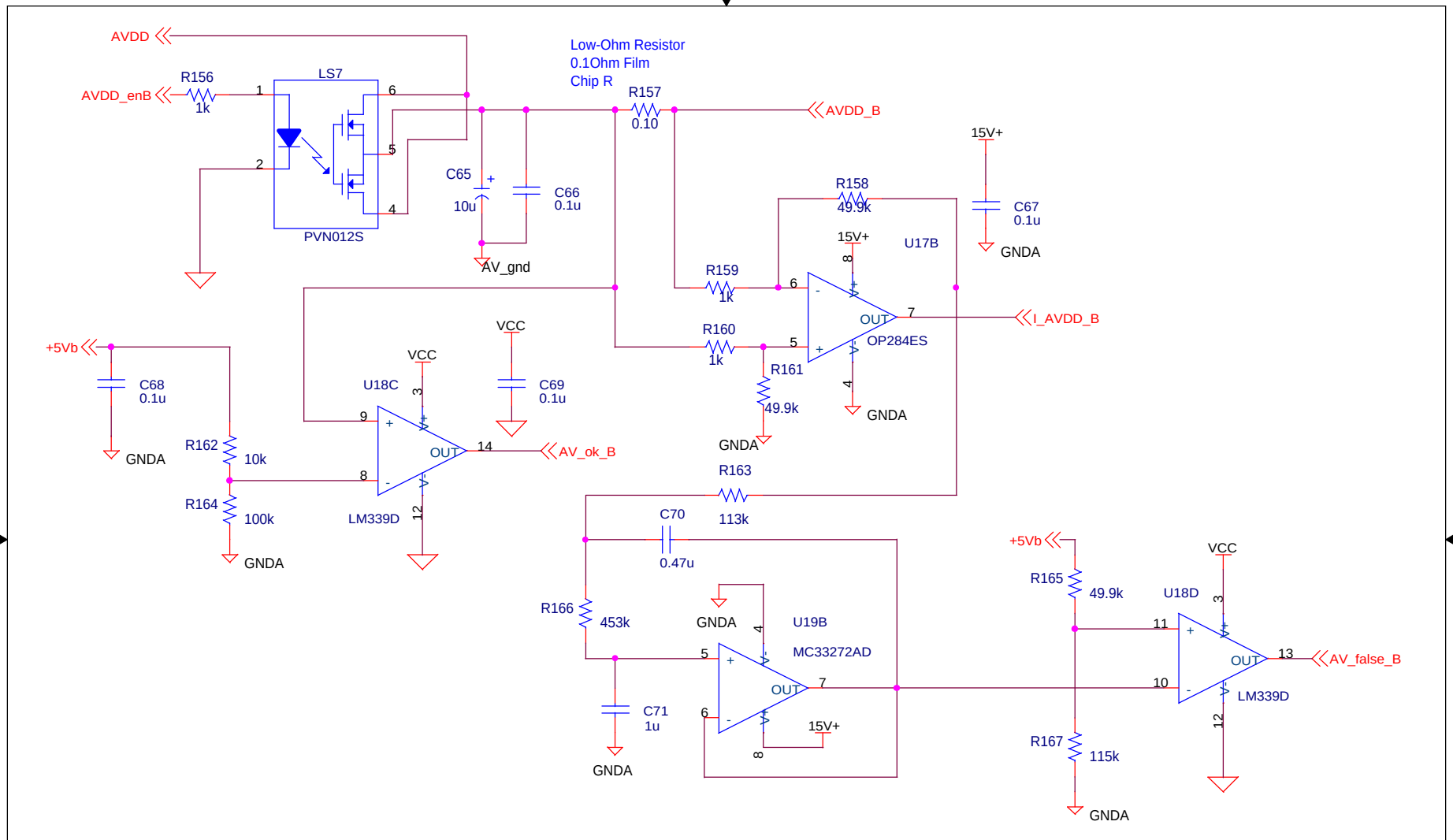

Sallen and Key 10 Hz . filter

Electronics Design Laboratory

Tim J. Sobering
124 Burt Hall
Kansas State University
Manhattan, KS 66506-0400

Title:
Chan. B: AVDD Low Voltage Power Switch & Current Monitoring

Size	Document Number:	REV
A	HEP008-M014	0.4

Date: 8/6/99 Page 14 of 26

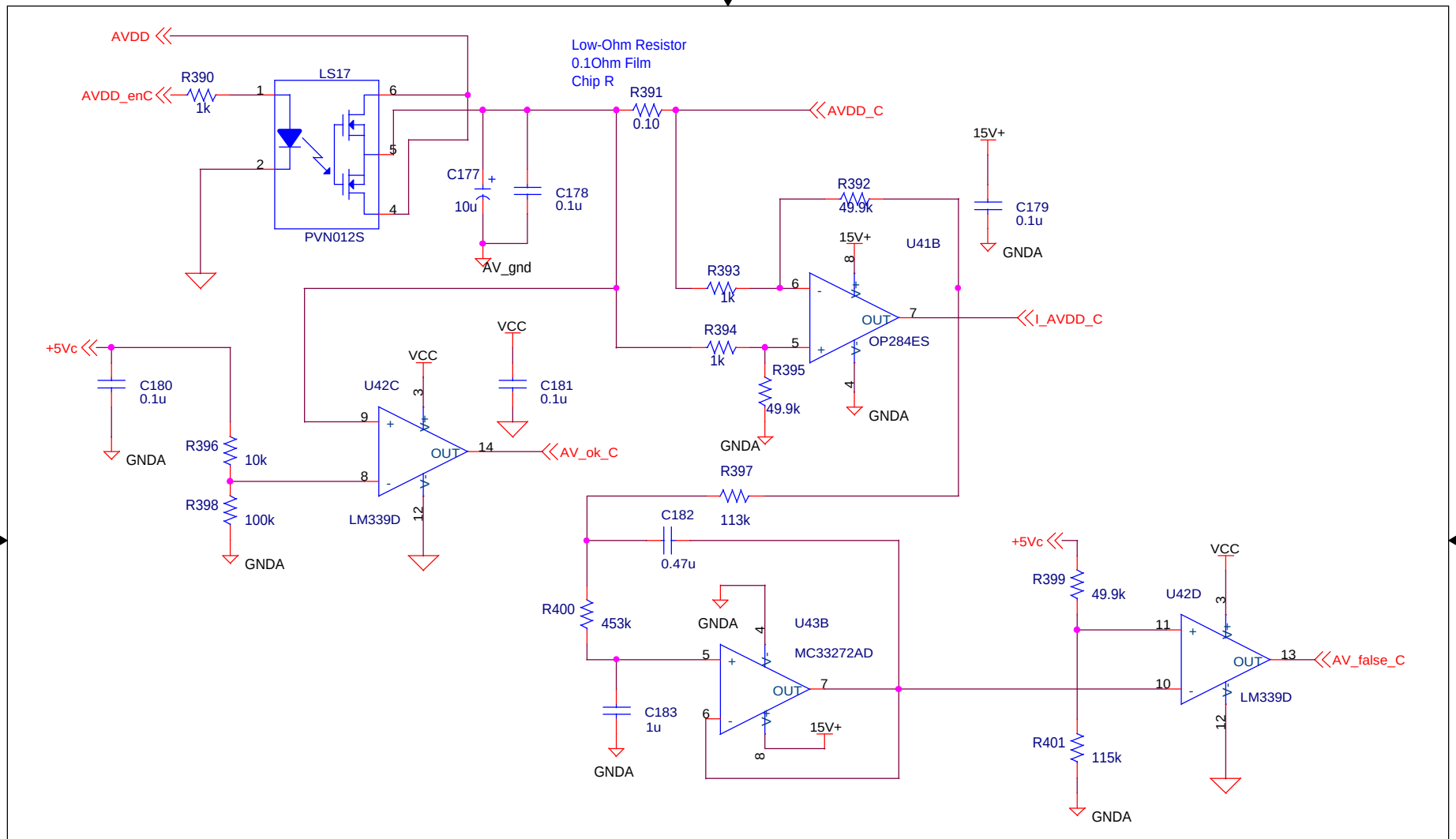

Sallen and Key 10 Hz . filter

Electronics Design Laboratory

Tim J. Sobering
124 Burt Hall
Kansas State University
Manhattan, KS 66506-0400

Title:
Chan. C: AVDD Low Voltage Power Switch & Current Monitoring

Size	Document Number:	REV
A	HEP008-M014	0.4

Date: 9/27/99 | Page 14 of 26

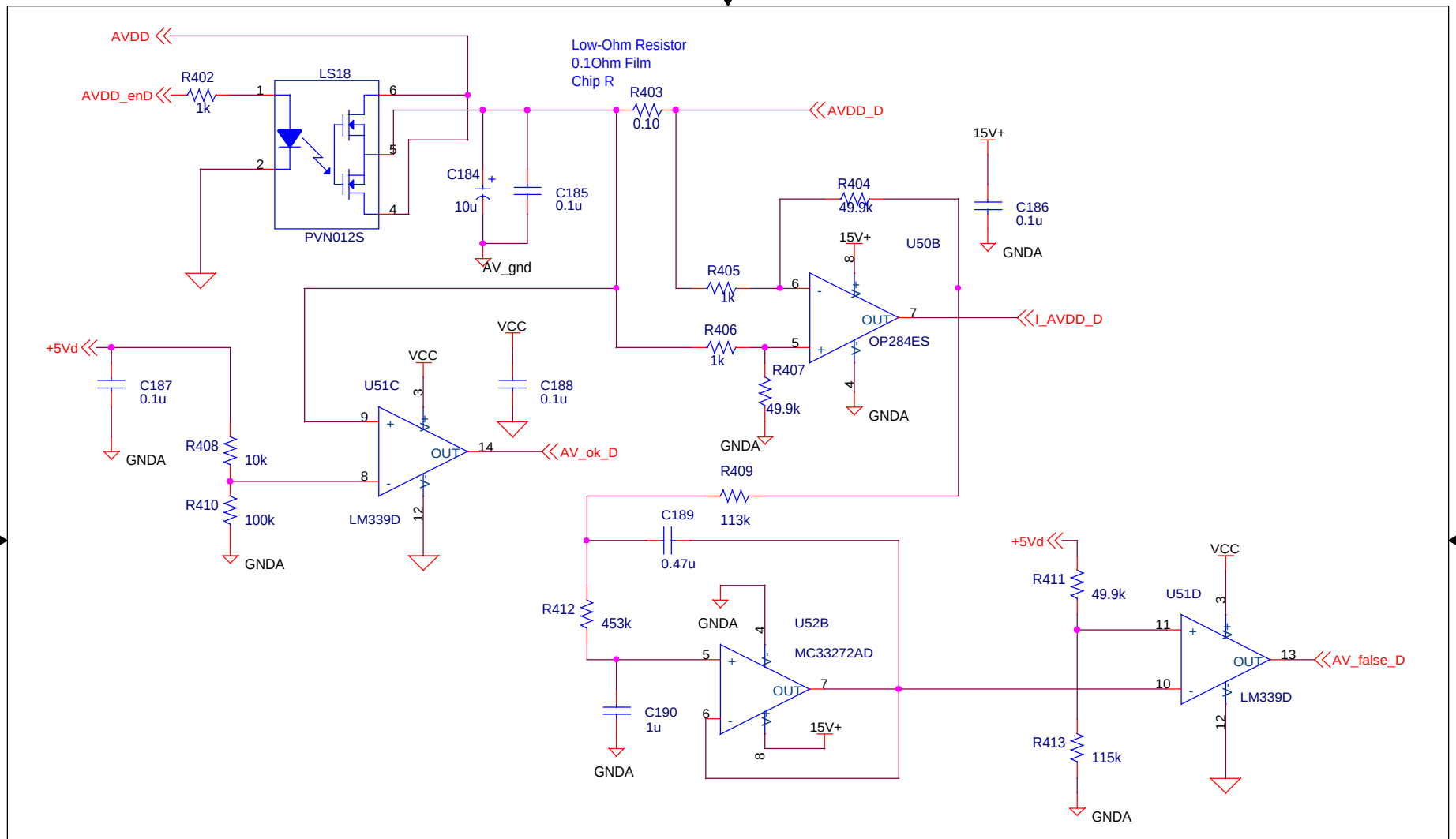

Sallen and Key 10 Hz . filter

Electronics Design Laboratory

Tim J. Sobering
124 Burt Hall
Kansas State University
Manhattan, KS 66506-0400

Title:
Chan. D: AVDD Low Voltage Power Switch & Current Monitoring

Size	Document Number:	REV
A	HEP008-M014	0.4

Date: 9/27/99 Page 14 of 26

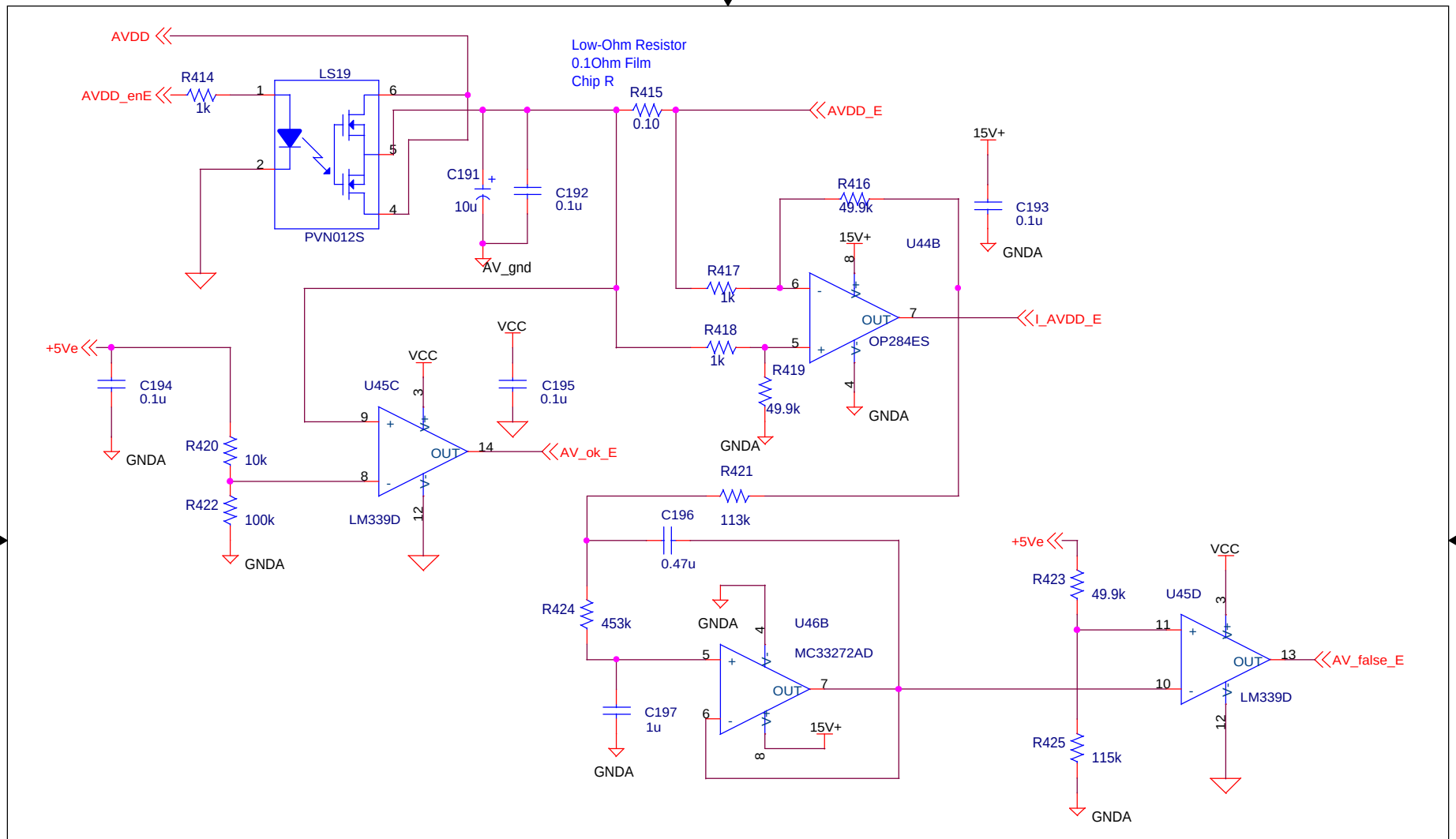

Sallen and Key 10 Hz . filter

Electronics Design Laboratory

Tim J. Sobering
124 Burt Hall
Kansas State University
Manhattan, KS 66506-0400

Title:
Chan. E: AVDD Low Voltage Power Switch & Current Monitoring

Size	Document Number:	REV
A	HEP008-M014	0.4

Date: 9/27/99 Page 14 of 26

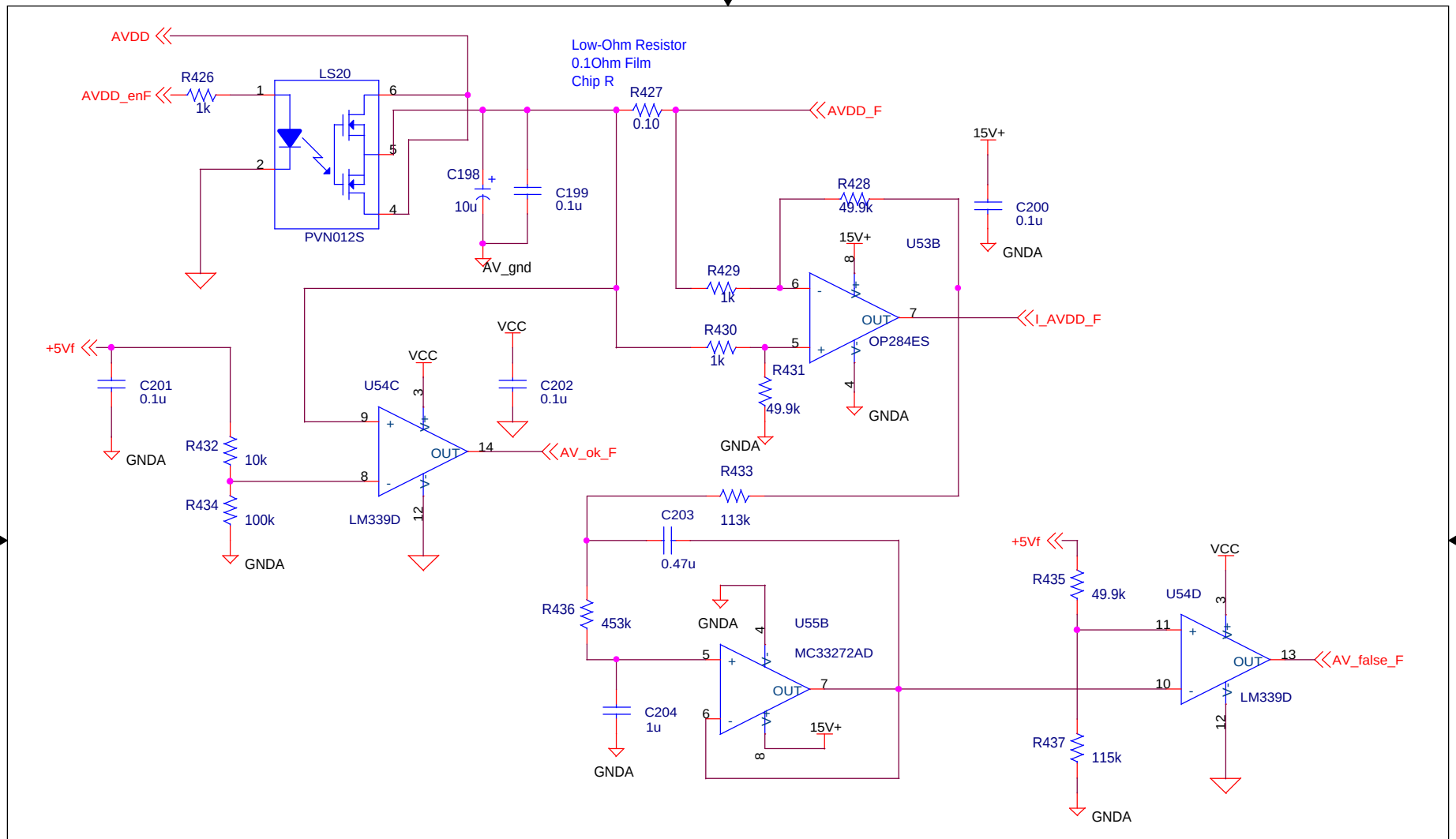

Sallen and Key 10 Hz . filter

Electronics Design Laboratory

Tim J. Sobering
124 Burt Hall
Kansas State University
Manhattan, KS 66506-0400

Title:
Chan. F: AVDD Low Voltage Power Switch & Current Monitoring

Size	Document Number:	REV
A	HEP008-M014	0.4

Date: 9/27/99 Page 14 of 26

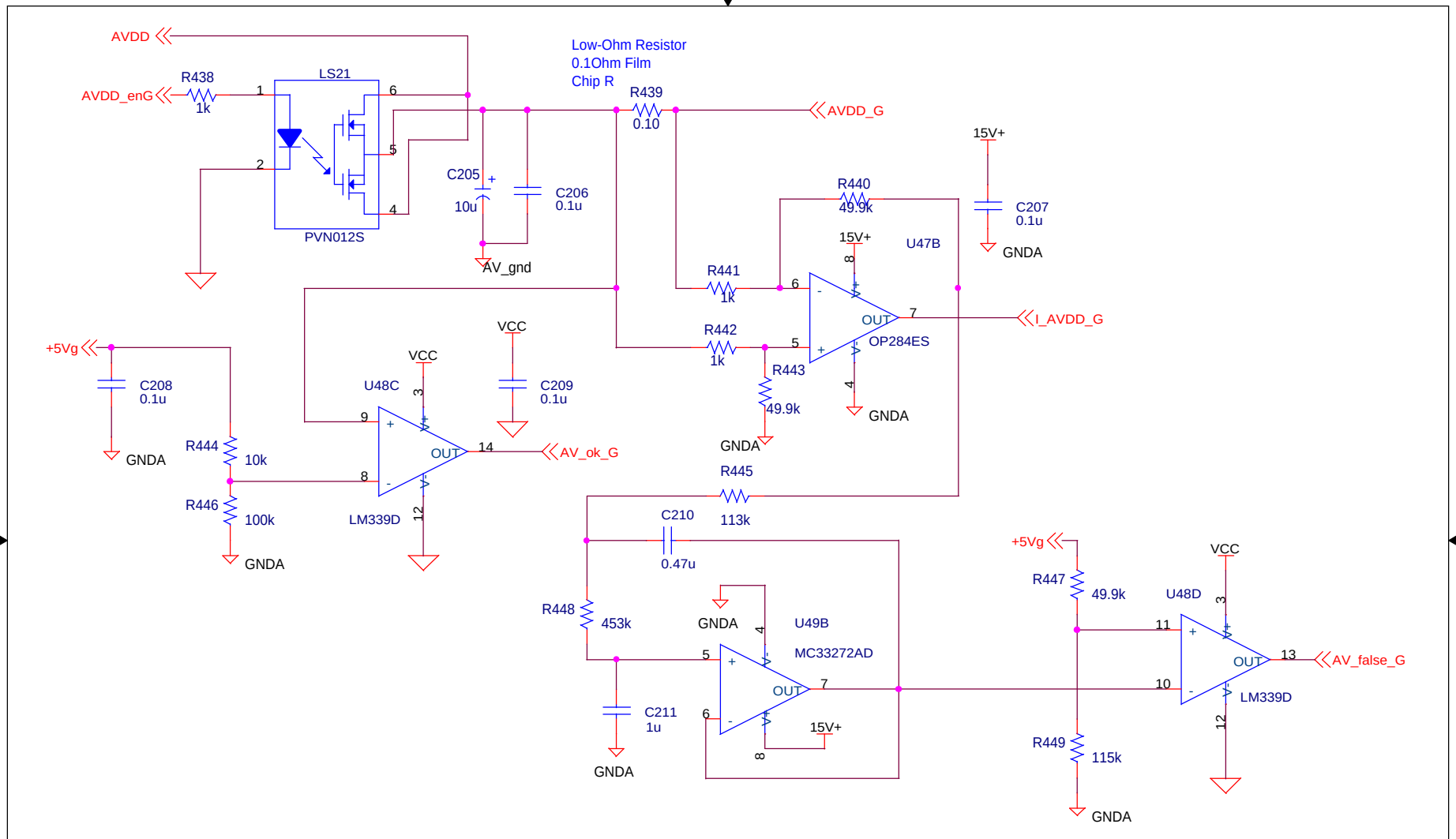

Sallen and Key 10 Hz . filter

Electronics Design Laboratory

Tim J. Sobering
124 Burt Hall
Kansas State University
Manhattan, KS 66506-0400

Title:
Chan. G: AVDD Low Voltage Power Switch & Current Monitoring

Size	Document Number:	REV
A	HEP008-M014	0.4

Date: 9/27/99 | Page 14 of 26

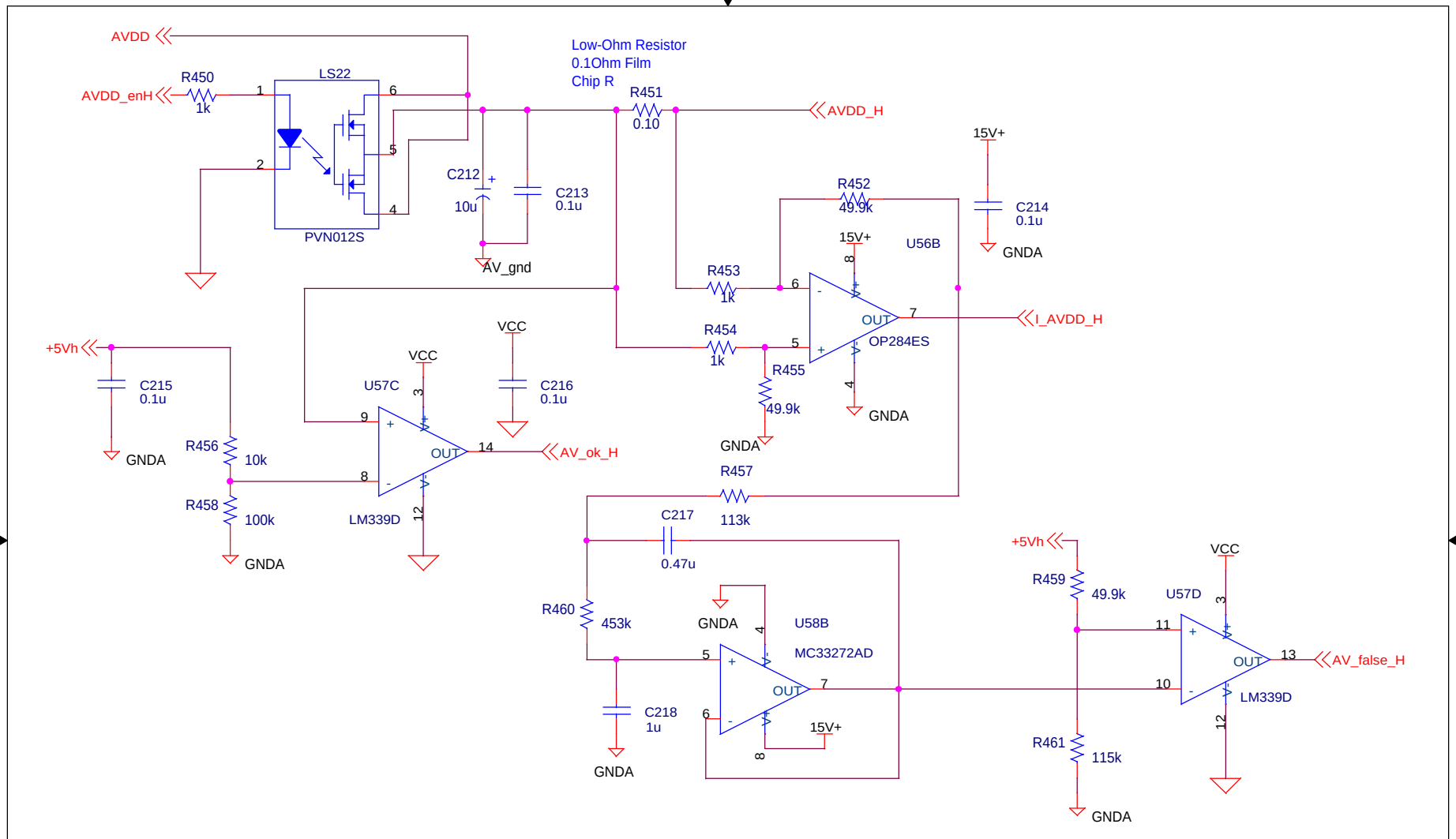

Sallen and Key 10 Hz . filter

Electronics Design Laboratory

Tim J. Sobering
124 Burt Hall
Kansas State University
Manhattan, KS 66506-0400

Title:
Chan. H: AVDD Low Voltage Power Switch & Current Monitoring

Size	Document Number:	REV
A	HEP008-M014	0.4

Date: 9/27/99 Page 14 of 26

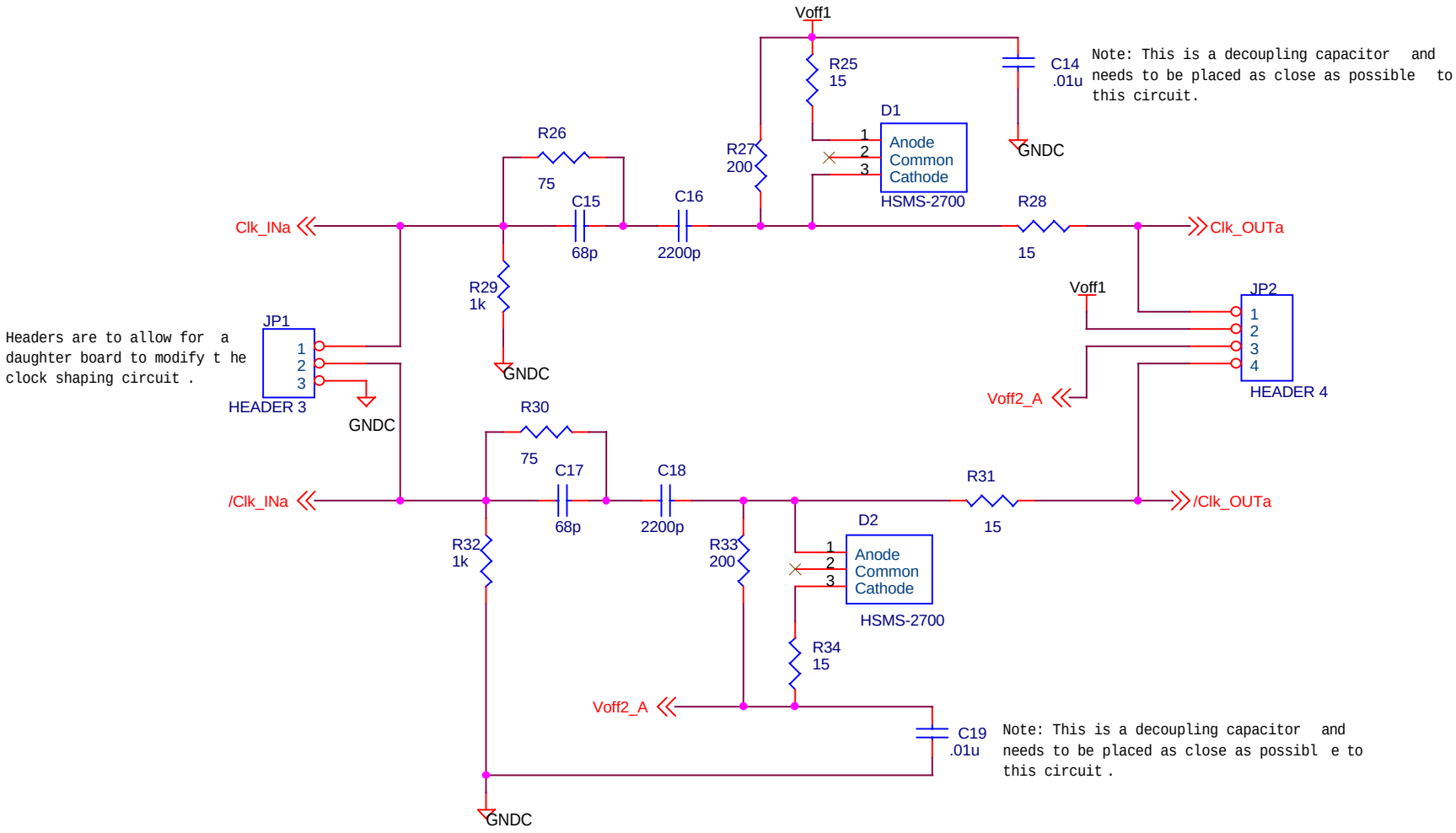

Title	Chan. A: Clock Pulse Waveform Shaping	
Size A	Document Number <Doc>	Rev 3
Date: Tuesday, October 05, 1999	Sheet 17 of 97	

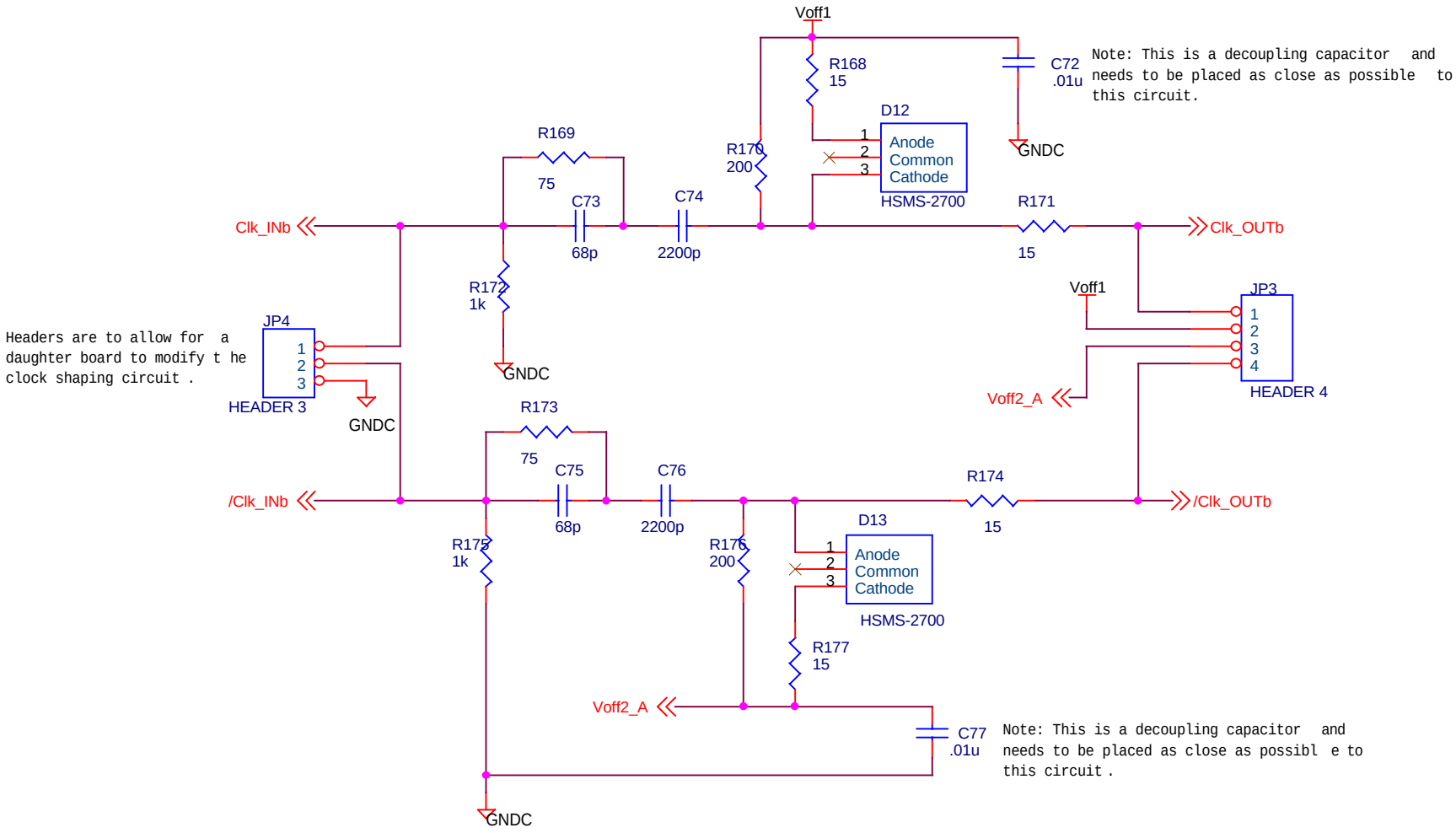

Title	Chan. B: Clock Pulse Waveform Shaping	
Size A	Document Number <Doc>	Rev 3
Date: Tuesday, October 05, 1999	Sheet 18 of 97	

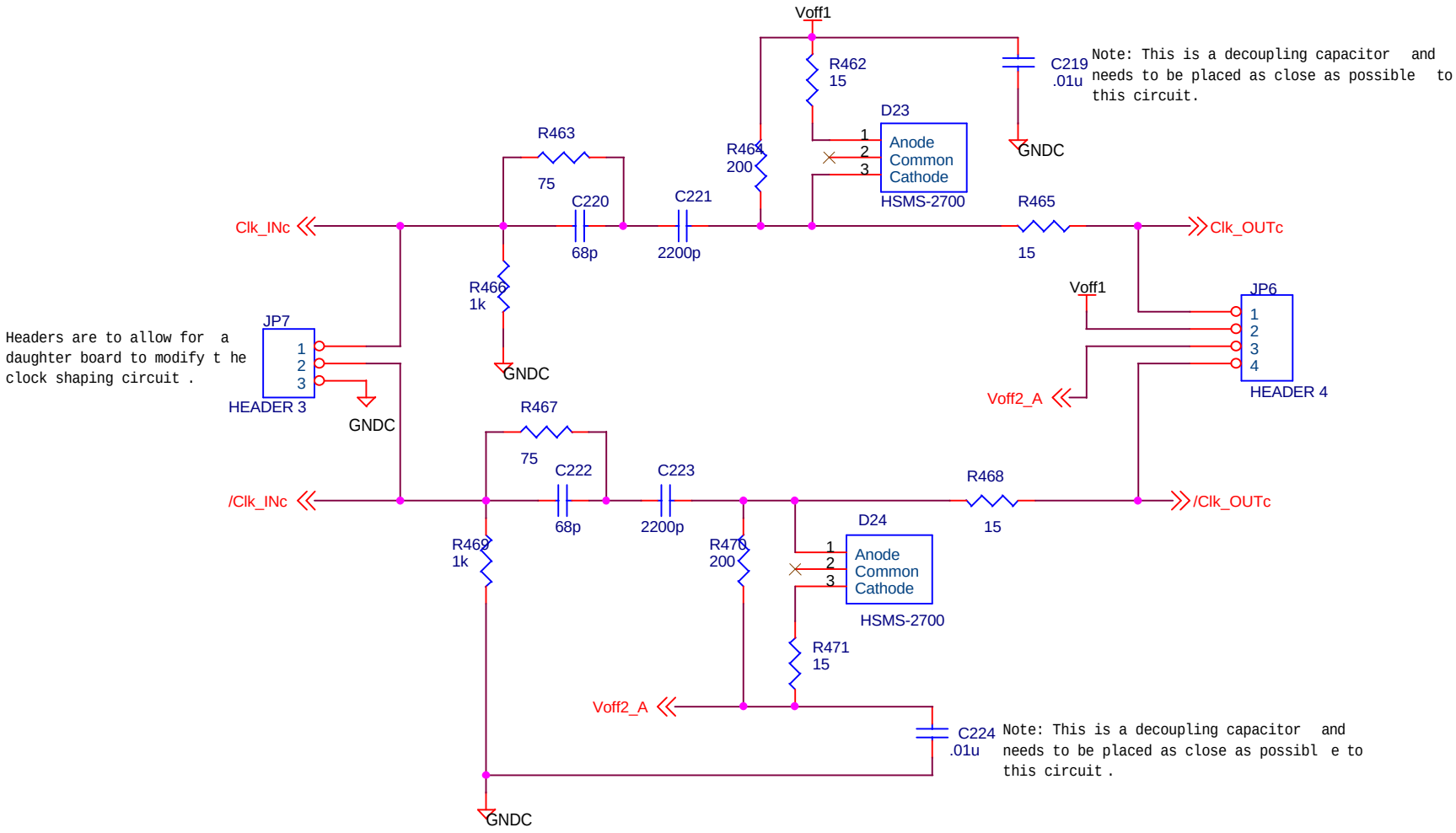

Title	Chan. C: Clock Pulse Waveform Shaping	
Size A	Document Number <Doc>	Rev 3
Date: Tuesday, October 05, 1999	Sheet 19 of 97	

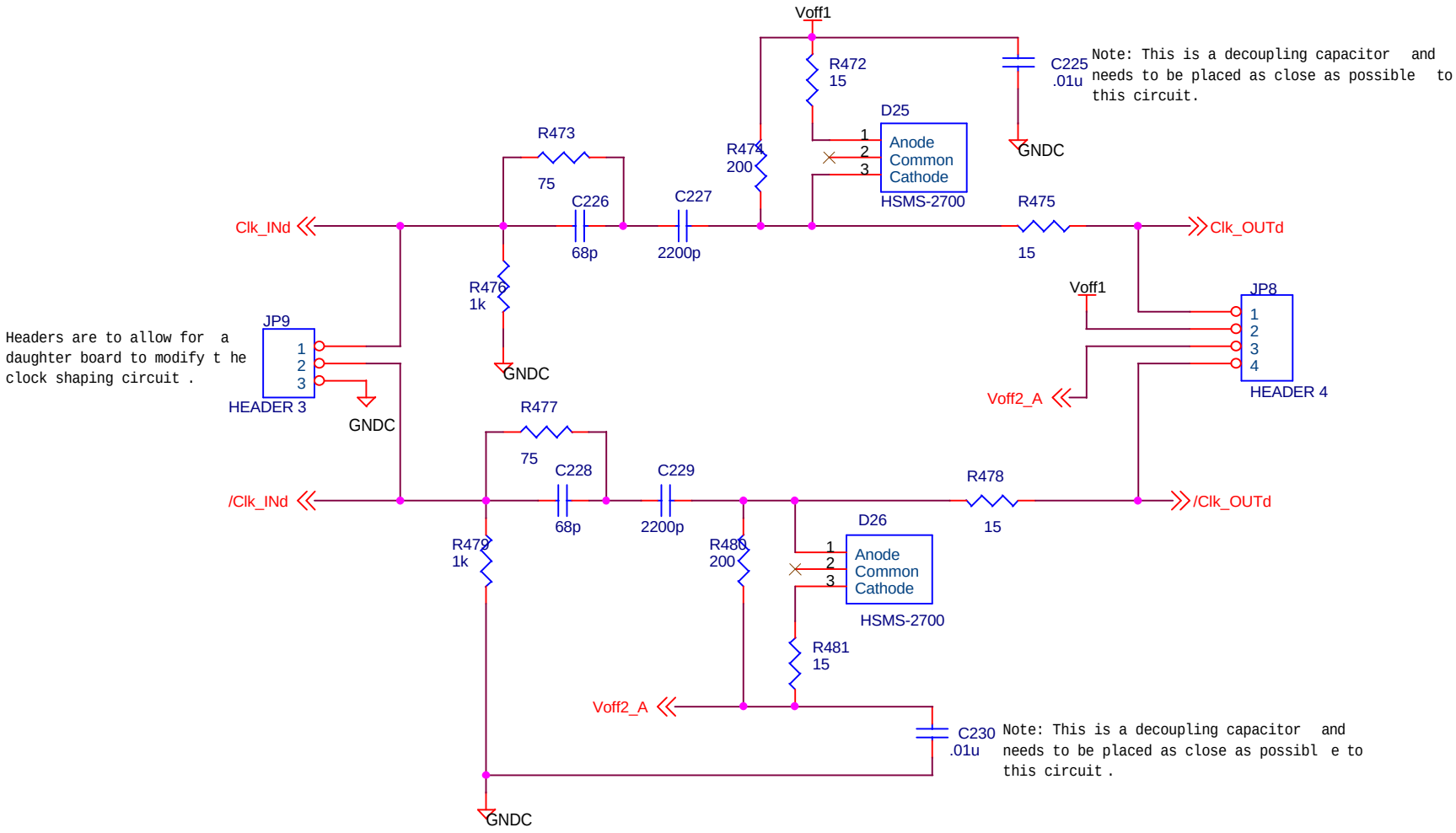

Title	Cahn. D: Clock Pulse Waveform Shaping	
Size A	Document Number <Doc>	Rev 3
Date: Tuesday, October 05, 1999	Sheet 20 of 97	

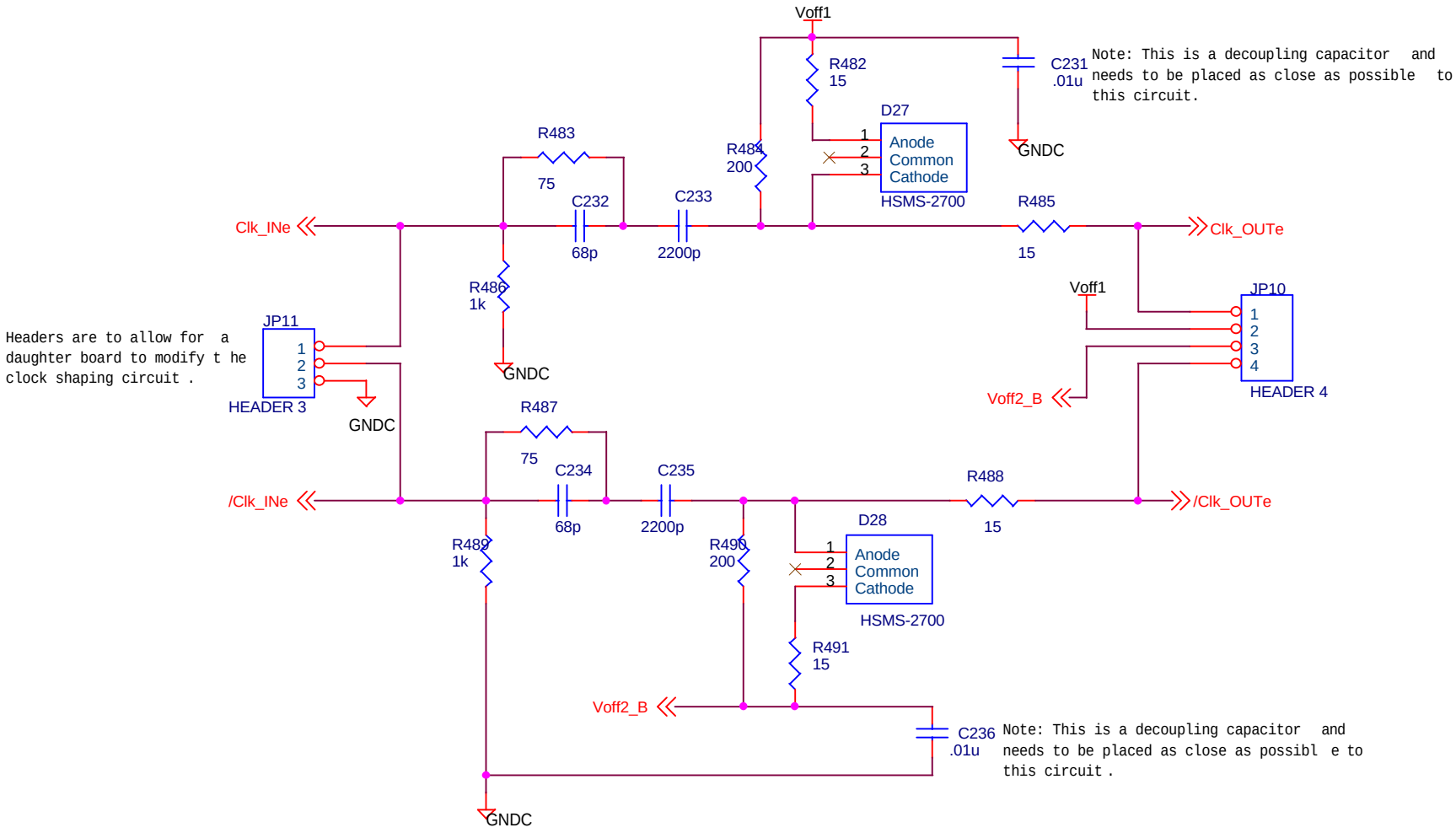

Title	Chan. E: Clock Pulse Waveform Shaping	
Size A	Document Number <Doc>	Rev 3
Date: Tuesday, October 05, 1999	Sheet 21 of 97	

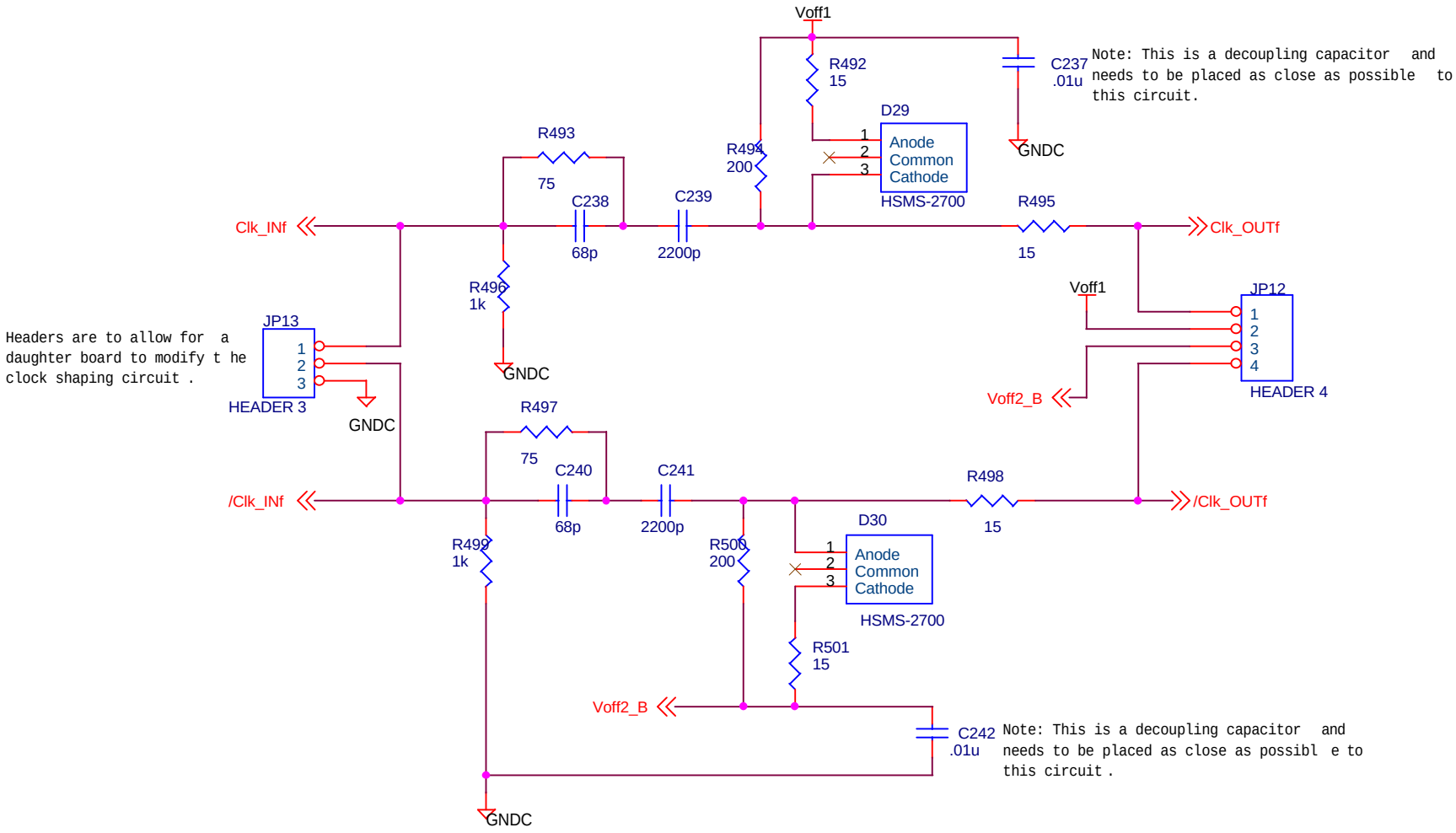

Title	Chan. F: Clock Pulse Waveform Shaping	
Size A	Document Number <Doc>	Rev 3
Date: Tuesday, October 05, 1999	Sheet 22 of 97	

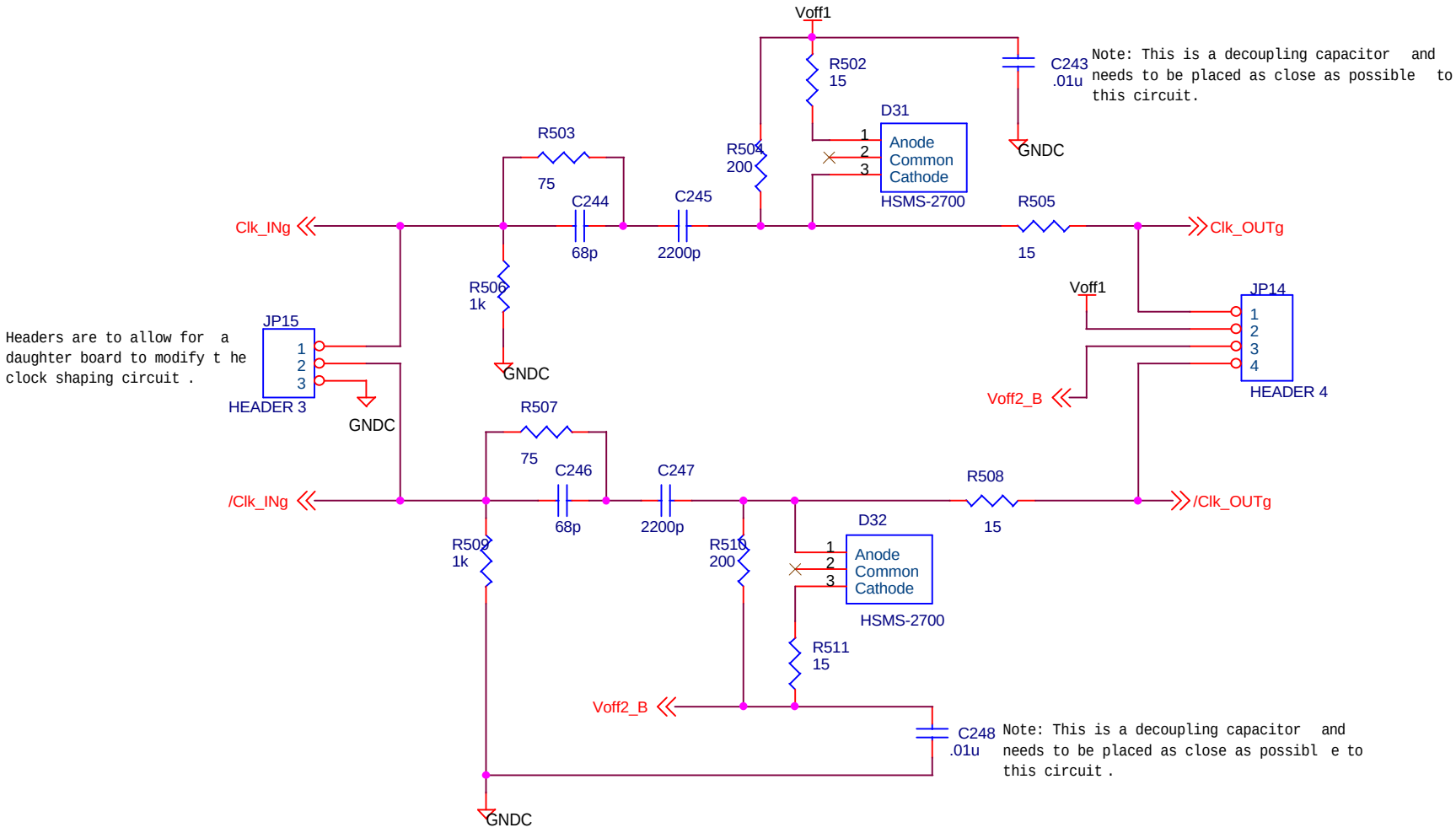

Title	Chan. G: Clock Pulse Waveform Shaping	
Size A	Document Number <Doc>	Rev 3
Date: Tuesday, October 05, 1999	Sheet 23 of 97	

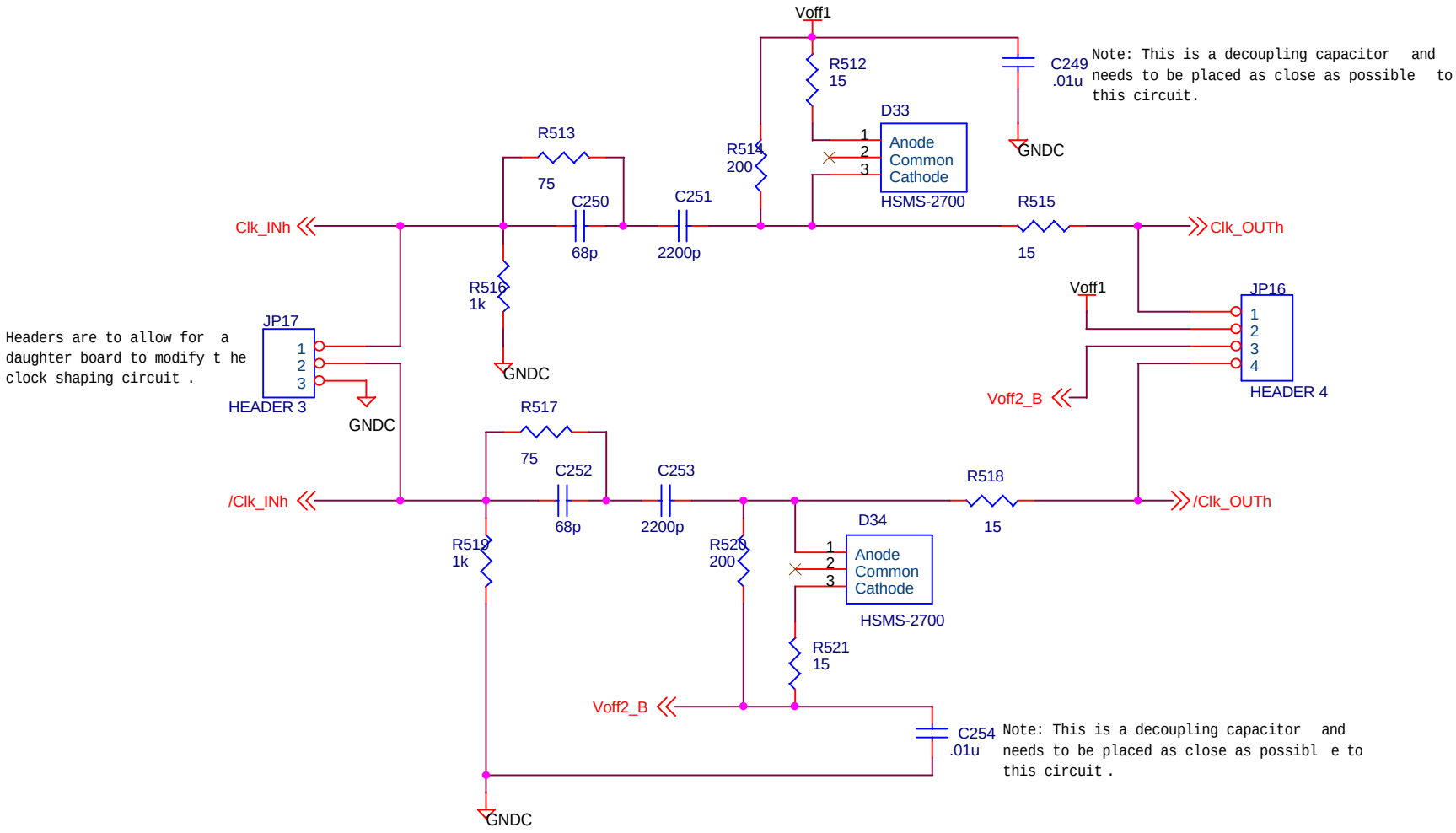

Title	Chan. H: Clock Pulse Waveform Shaping	
Size A	Document Number <Doc>	Rev 3
Date: Tuesday, October 05, 1999	Sheet 24 of 97	

Sequencer Side

(Back Plane)

Clock signals go through the
10-contact header to a daughter
board with coax connectors.
Coax Connectors are Johnson MMCX
connectors (p.n. 135-3701-311)

SVX Chips

(Front Panel)

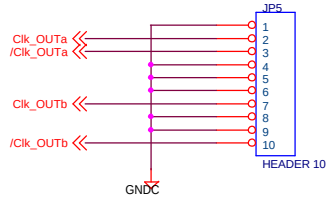

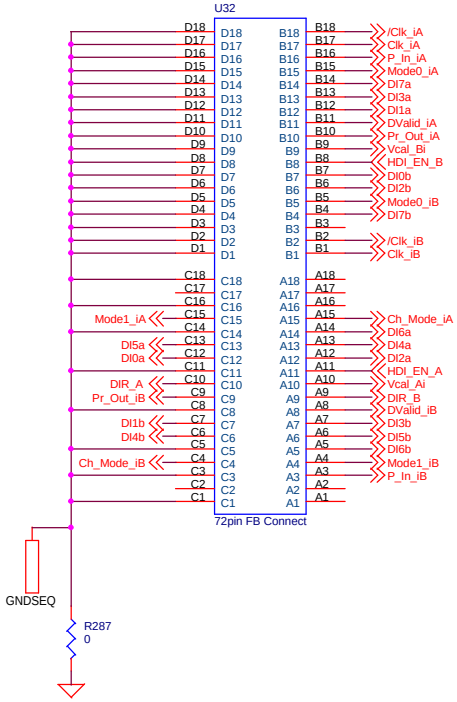

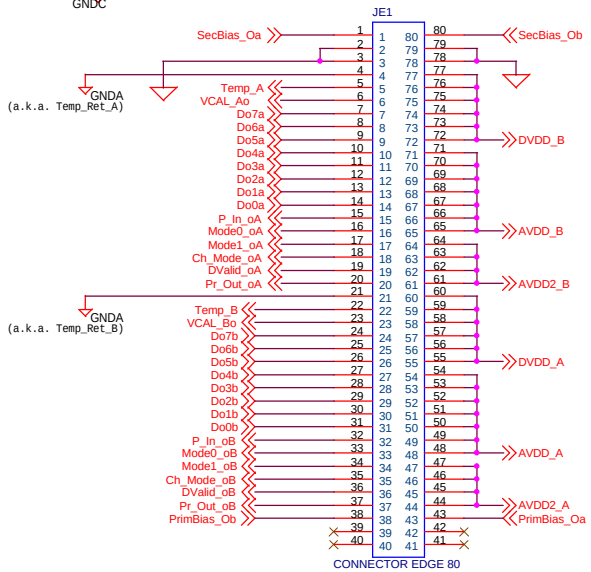

NOTE: pinout for 80-pin
Mini D IS NOT FINAL

80-pin connector is to be a Mini-D,
3M part number N10280-52E2VC

The Follwing resistor values and
to be in the indicated package:

< 250	EIA 1206 1/8 W
250-900	EIA 0805 1/10 W
910	EIA 0603 1/16 W
1k	EIA 0805
1.1k	EIA 1206
> 1.2k	EIA 0603

Title	Channels A & B Connectors	
Size B	Document Number <Doc>	Rev 3
Date: Tuesday, October 05, 1999	Sheet 25 of 97	

Sequencer Side

(Back Plane)

Clock signals go through the
10-contact header to a daughter
board with coax connectors.
Coax Connectors are Johnson MMCX
connectors (p.n. 135-3701-311)

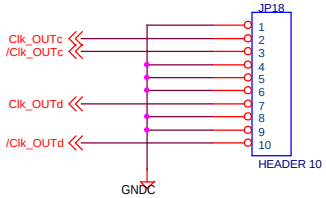

SVX Chips

(Front Panel)

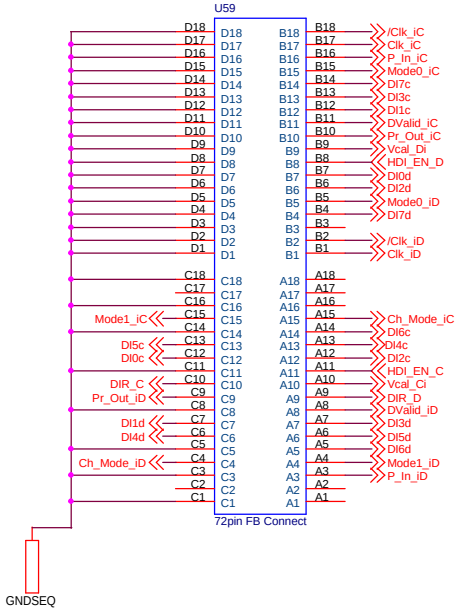

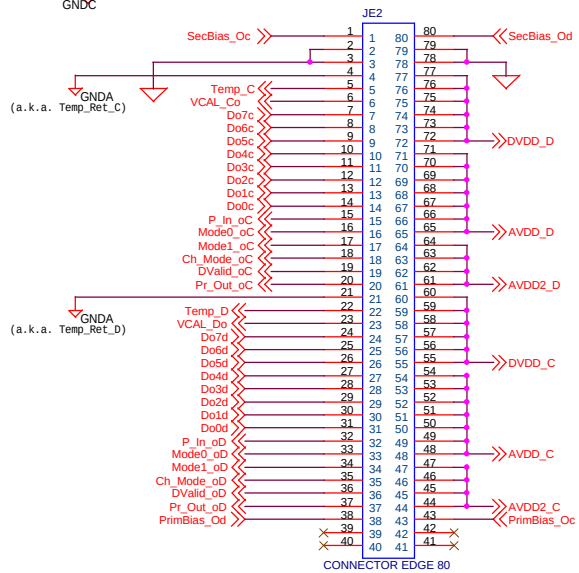

NOTE: pinout for 80-pin
Mini D IS NOT FINAL

80-pin connector is to be a Mini-D,
3M part number N10280-52E2VC

The Follwing resistor values and
to be in the indicated package:

< 250	EIA 1206 1/8 W
250-900	EIA 0805 1/10 W
910	EIA 0603 1/16 W
1k	EIA 0805
1.1k	EIA 1206
> 1.2k	EIA 0603

Title	Channels A & B Connectors	
Size B	Document Number <Doc>	Rev 3
Date: Tuesday, October 05, 1999	Sheet 26 of 97	

Sequencer Side

(Back Plane)

Clock signals go through the
10-contact header to a daughter
board with coax connectors.
Coax Connectors are Johnson MMCX
connectors (p.n. 135-3701-311)

SVX Chips

(Front Panel)

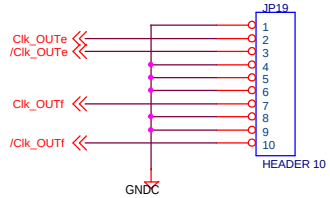

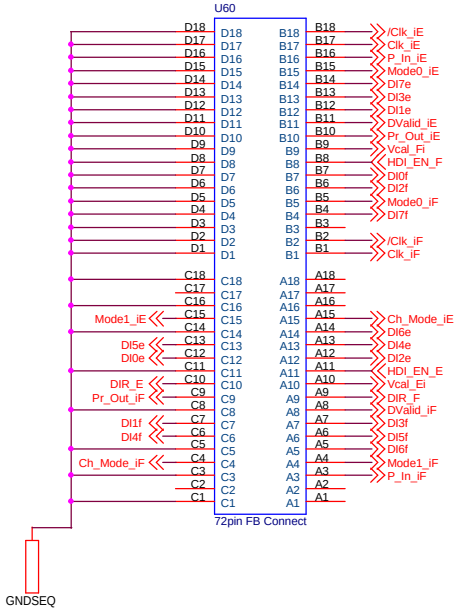

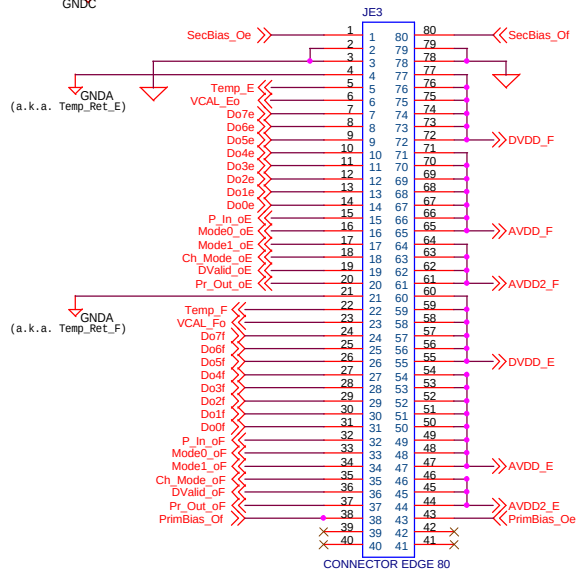

NOTE: pinout for 80-pin
Mini D IS NOT FINAL

80-pin connector is to be a Mini-D,
3M part number N10280-52E2VC

The Follwing resistor values and
to be in the indicated package:

< 250	EIA 1206 1/8 W
250-900	EIA 0805 1/10 W
910	EIA 0603 1/16 W
1k	EIA 0805
1.1k	EIA 1206
> 1.2k	EIA 0603

Title	Channels A & B Connectors	
Size B	Document Number <Doc>	Rev 3
Date: Tuesday, October 05, 1999	Sheet 27 of 97	

Sequencer Side

(Back Plane)

Clock signals go through the
10-contact header to a daughter
board with coax connectors.
Coax Connectors are Johnson MMCX
connectors (p.n. 135-3701-311)

SVX Chips

(Front Panel)

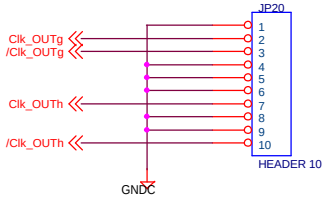

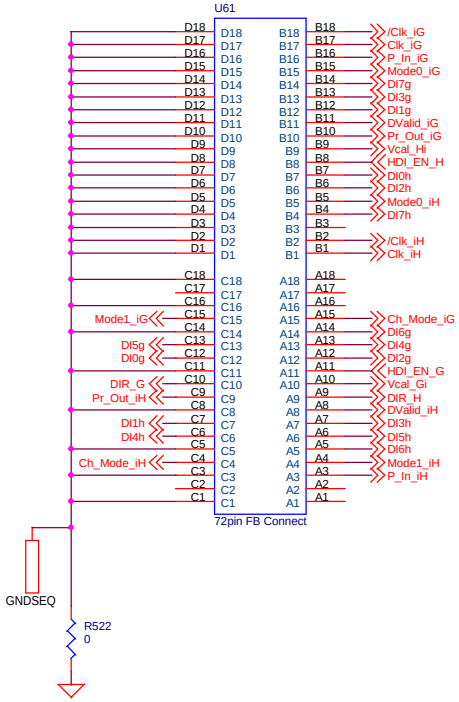

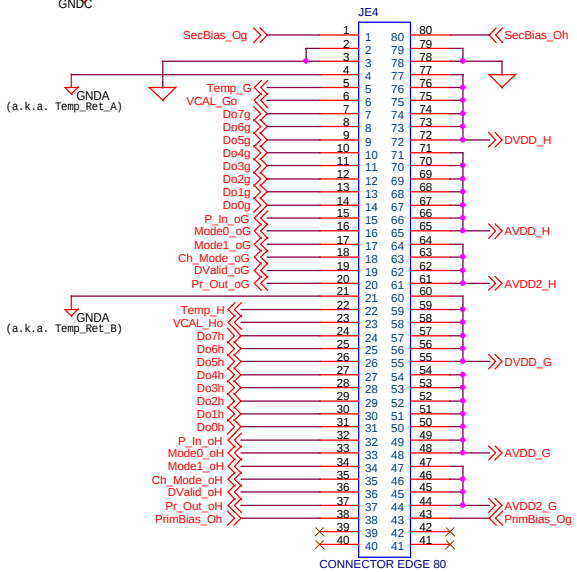

NOTE: pinout for 80-pin
Mini D IS NOT FINAL

80-pin connector is to be a Mini-D,
3M part number N10280-52E2VC

The Follwing resistor values and
to be in the indicated package:

< 250	EIA 1206 1/8 W
250-900	EIA 0805 1/10 W
910	EIA 0603 1/16 W
1k	EIA 0805
1.1k	EIA 1206
> 1.2k	EIA 0603

Title	Channels A & B Connectors	
Size B	Document Number <Doc>	Rev 3
Date: Tuesday, October 05, 1999	Sheet 28 of 97	

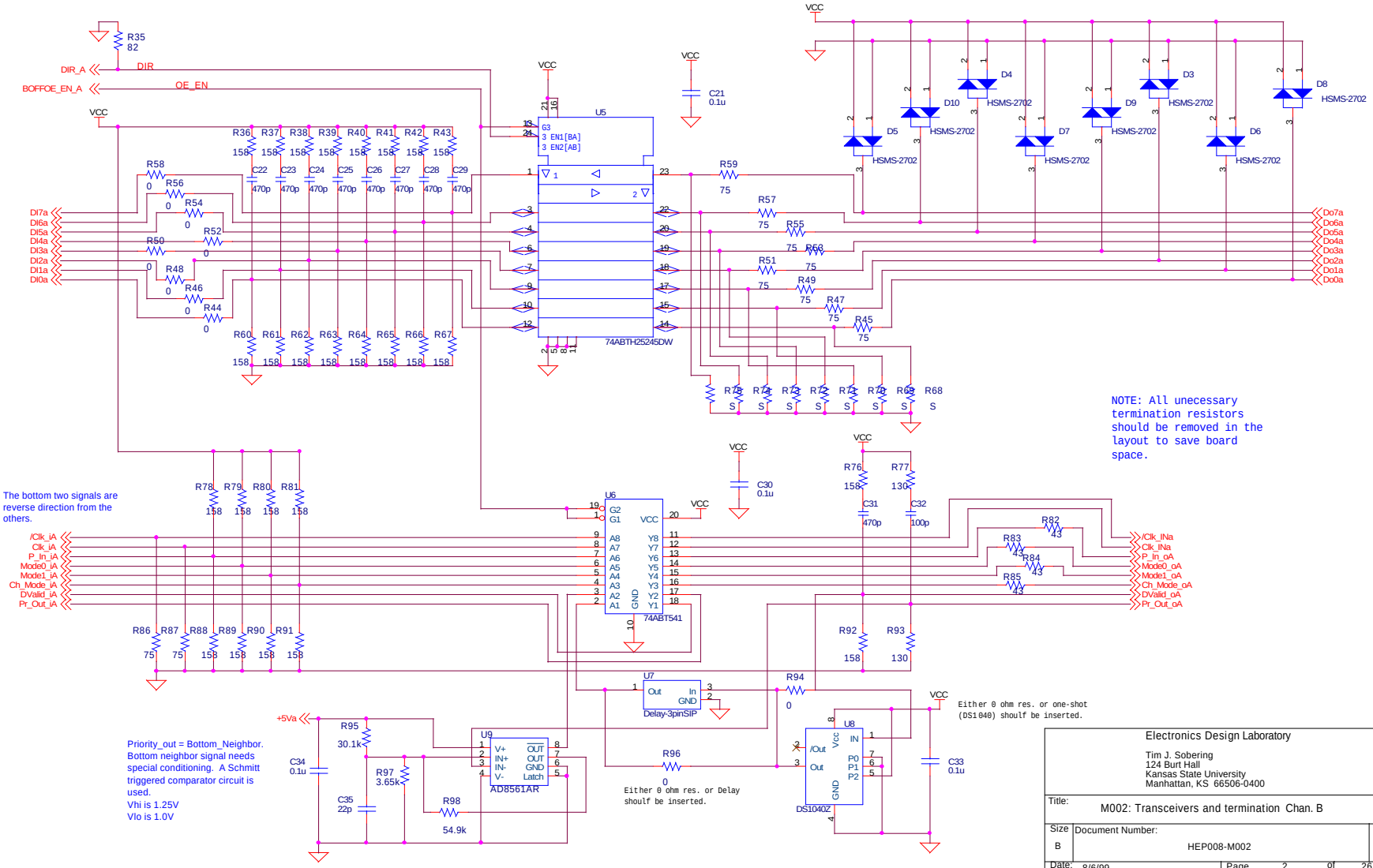

Electronics Design Laboratory

Tim J. Sobering
124 Burt Hall
Kansas State University
Manhattan, KS 66506-0400

Title: M002: Transceivers and termination Chan. B

Size	Document Number:	REV
B	HEP008-M002	0.4

Date: 8/6/99 Page 2 of 26

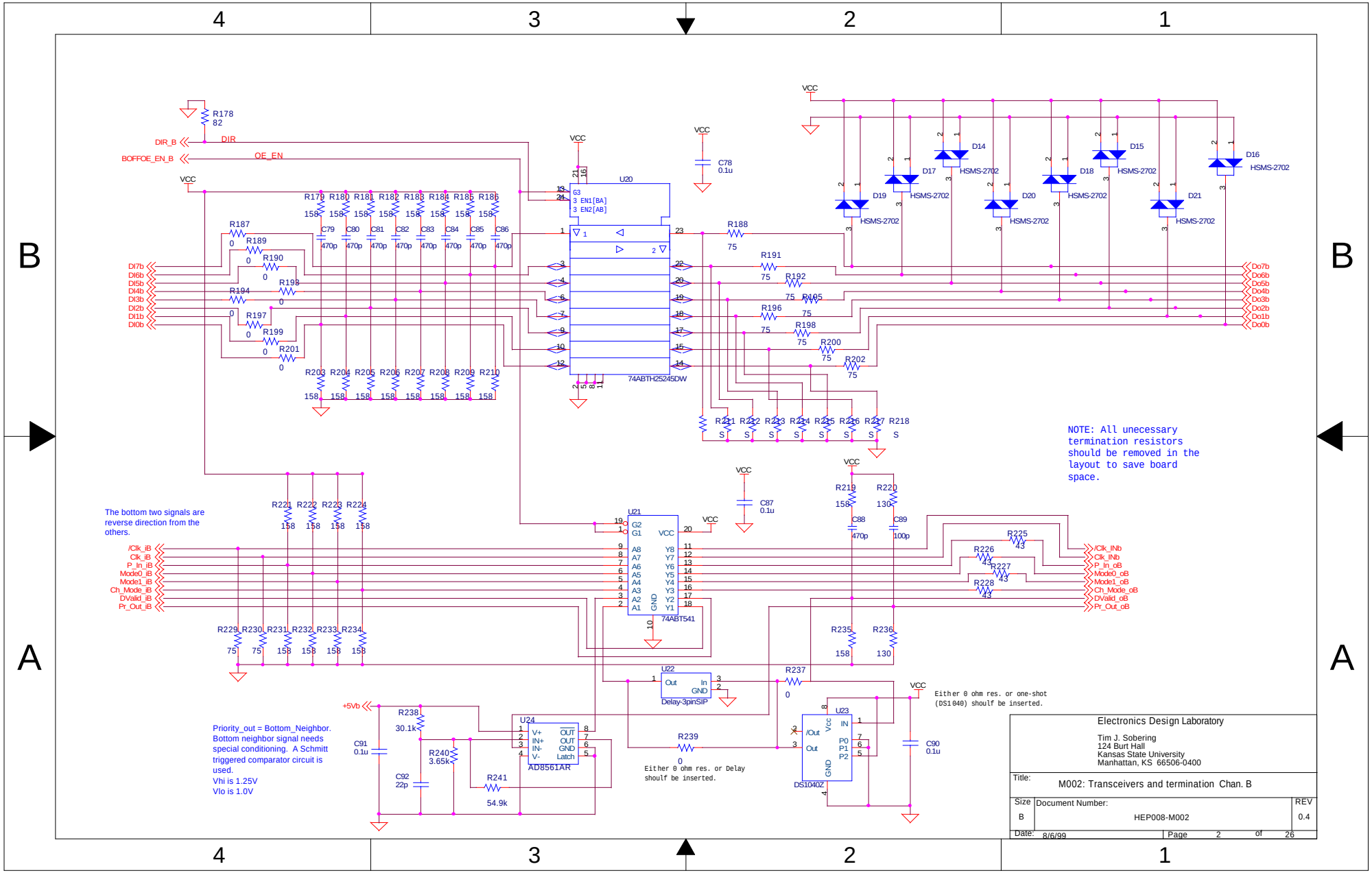
NOTE: All unecessary termination resistors should be removed in the layout to save board space.
The bottom two signals are reverse direction from the others.
Priority_out = Bottom_Neighbor. Bottom neighbor signal needs special conditioning. A Schmitt triggered comparator circuit is used.
Vhi is 1.25V
Vlo is 1.0V
Either 0 ohm res. or Delay shoulf be inserted.
Either 0 ohm res. or one-shot (DS1040) shoulf be inserted.
U20
74ABTH25245DW
U21
74ABT541
U22
Delay-3pinSIP
U23
DS1040Z
U24
AD8561AR
Electronics Design Laboratory
Tim J. Sobering
124 Burt Hall
Kansas State University
Manhattan, KS 66506-0400
Title:
M002: Transceivers and termination Chan. B
Size
B
Document Number:
HEP008-M002
REV
0.4
Date: 8/6/99
Page 2 of 26

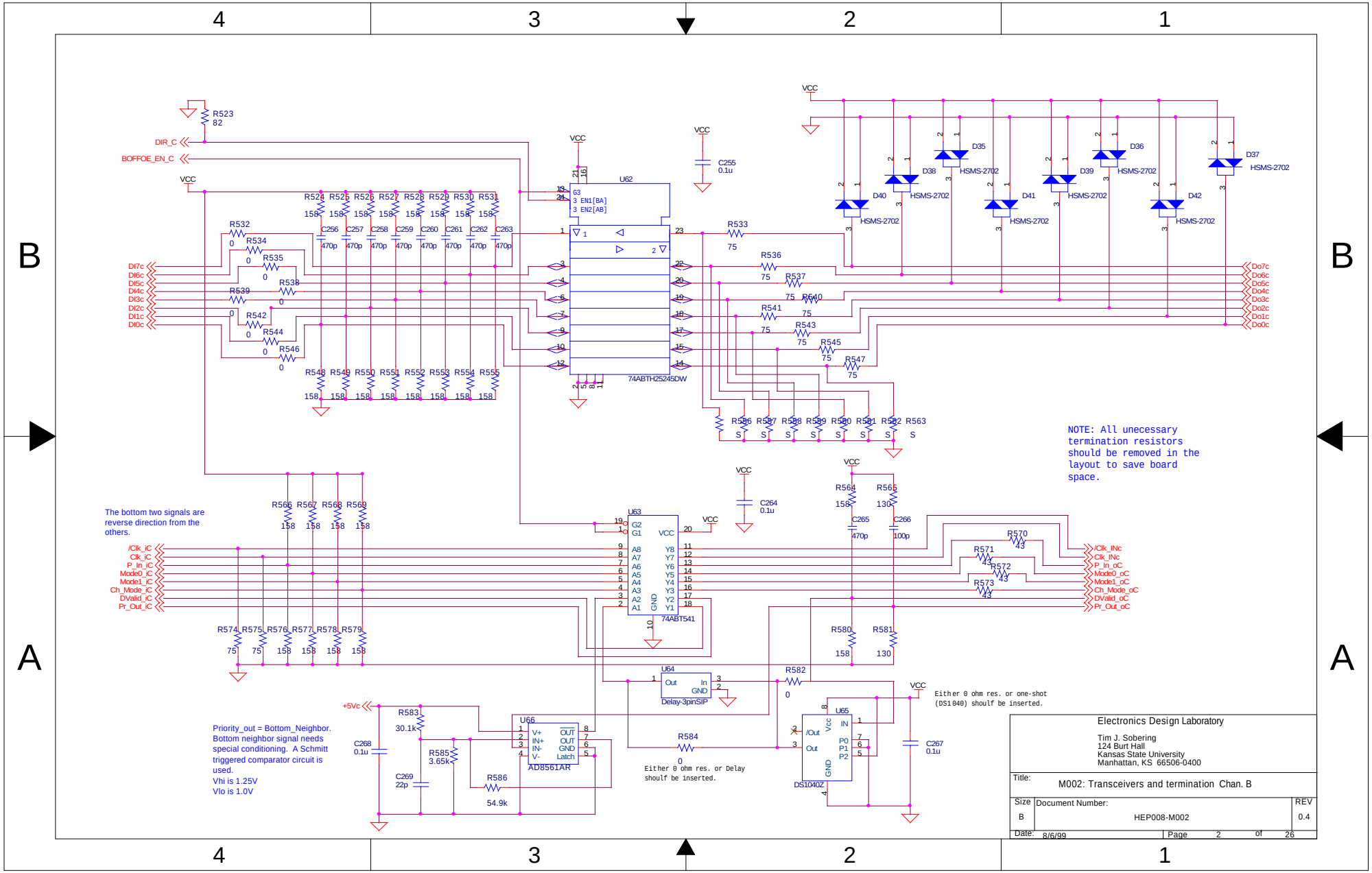

Electronics Design Laboratory

Tim J. Sobering
124 Burt Hall
Kansas State University
Manhattan, KS 66506-0400

Title: M002: Transceivers and termination Chan. B

Size: B | Document Number: HEP008-M002 | REV 0.4

Date: 8/6/99 | Page 2 of 26

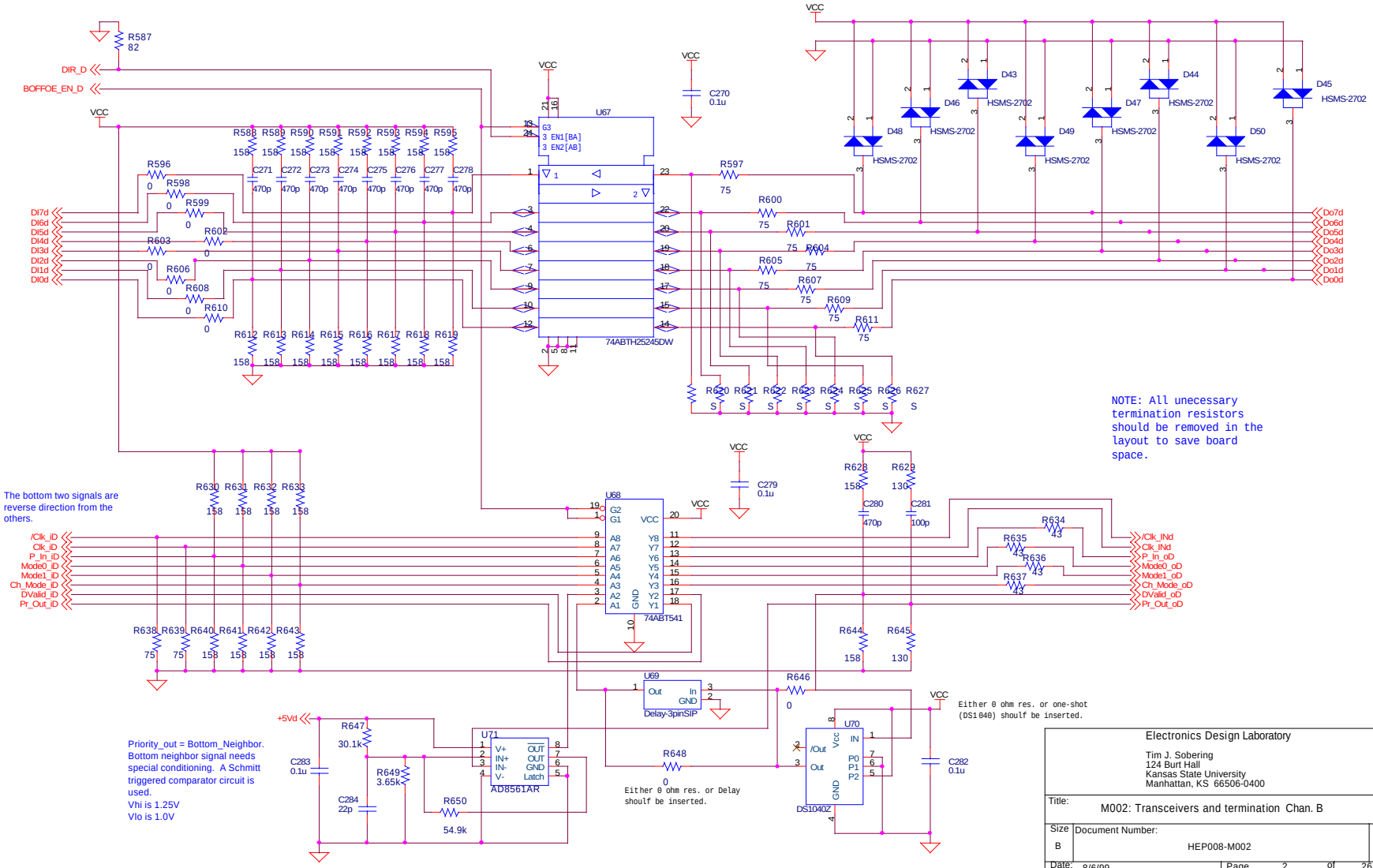

Electronics Design Laboratory

Tim J. Sobering
124 Burt Hall
Kansas State University
Manhattan, KS 66506-0400

Title: M002: Transceivers and termination Chan. B

Size	Document Number:	REV
B	HEP008-M002	0.4

Date: 8/6/99 Page 2 of 26

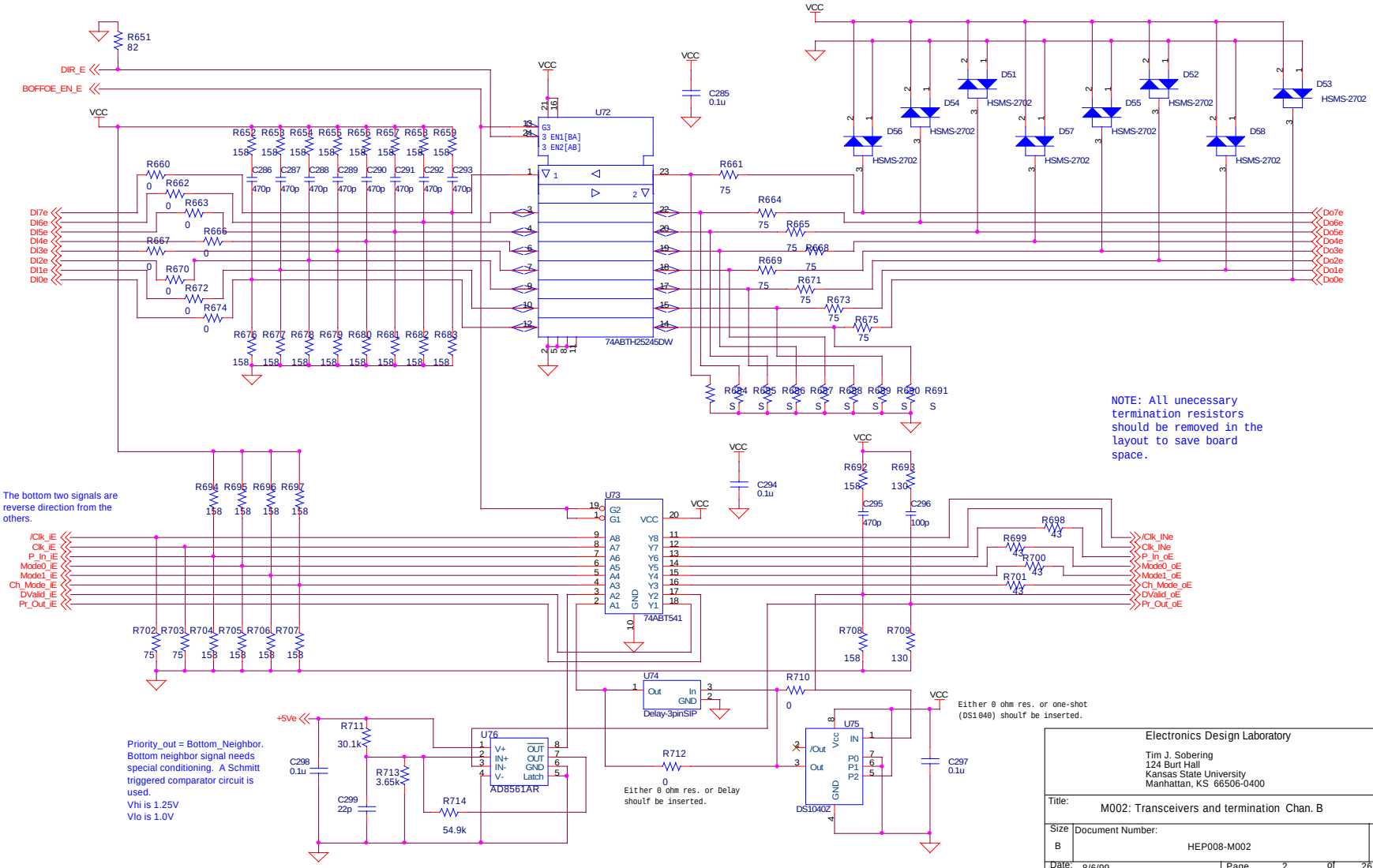

Electronics Design Laboratory

Tim J. Sobering
124 Burt Hall
Kansas State University
Manhattan, KS 66506-0400

Title: M002: Transceivers and termination Chan. B

Size	Document Number:	REV
B	HEP008-M002	0.4

Date: 8/6/99 Page 2 of 26

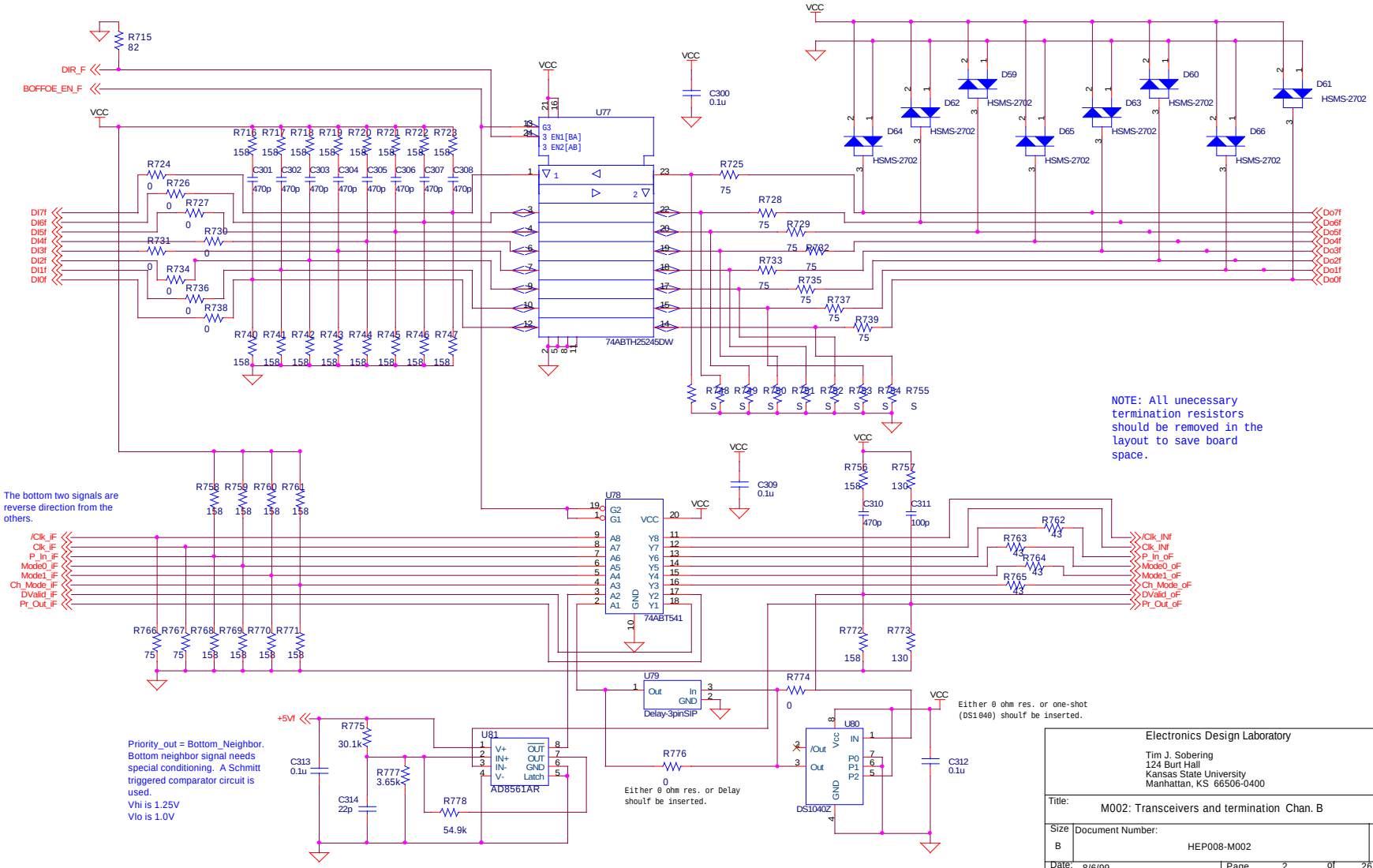
DIR_F
BOFFOE_EN_F
VCC
R715 82
U77
74ABTH25245DW
C300 0.1u
D59 HSMS-2702
D60 HSMS-2702
D61 HSMS-2702
D62 HSMS-2702
D63 HSMS-2702
D64 HSMS-2702
D65 HSMS-2702
D66 HSMS-2702
DI7f
DI6f
DI5f
DI4f
DI3f
DI2f
DI1f
DI0f
Do7f
Do6f
Do5f
Do4f
Do3f
Do2f
Do1f
Do0f
NOTE: All unecessary termination resistors should be removed in the layout to save board space.
The bottom two signals are reverse direction from the others.
U78
74ABT541
C309 0.1u
/Clk_iF
Clk_iF
P_In_iF
Mode0_iF
Mode1_iF
Ch_Mode_iF
DValid_iF
Pr_Out_iF
/Clk_INf
Clk_INf
P_In_oF
Mode0_oF
Mode1_oF
Ch_Mode_oF
DValid_oF
Pr_Out_oF
U79
Delay-3pinSIP
Either 0 ohm res. or one-shot (DS1040) shoulf be inserted.
+5Vf
U81
AD8561AR
Priority_out = Bottom_Neighbor. Bottom neighbor signal needs special conditioning. A Schmitt triggered comparator circuit is used.
Vhi is 1.25V
Vlo is 1.0V
Either 0 ohm res. or Delay shoulf be inserted.
U80
DS1040Z
C312 0.1u
Electronics Design Laboratory
Tim J. Sobering
124 Burt Hall
Kansas State University
Manhattan, KS 66506-0400
Title: M002: Transceivers and termination Chan. B
Size B
Document Number: HEP008-M002
REV 0.4
Date: 8/6/99
Page 2 of 26

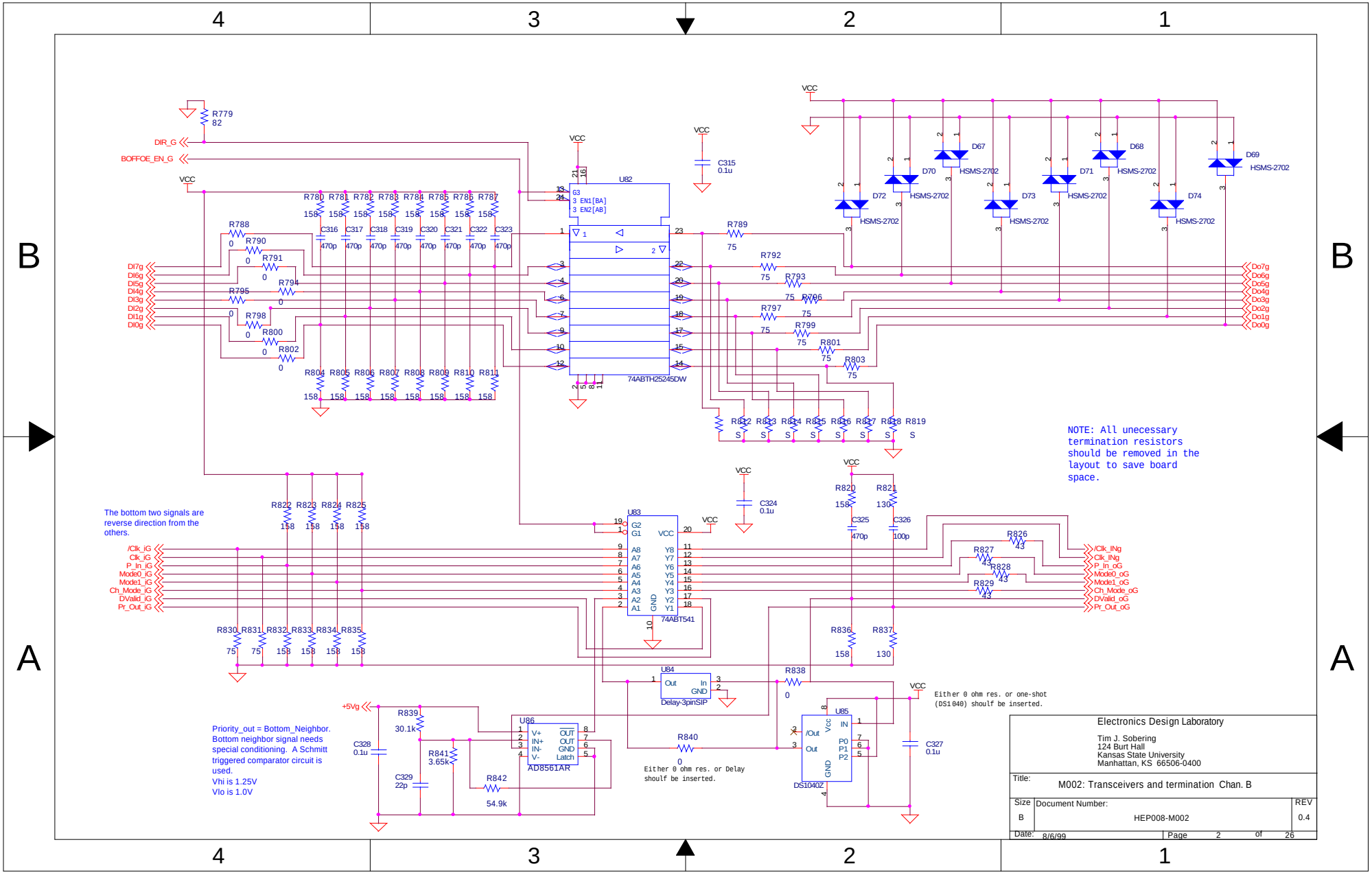
NOTE: All unecessary termination resistors should be removed in the layout to save board space.
The bottom two signals are reverse direction from the others.
Priority_out = Bottom_Neighbor. Bottom neighbor signal needs special conditioning. A Schmitt triggered comparator circuit is used.
Vhi is 1.25V
Vlo is 1.0V
Either 0 ohm res. or one-shot (DS1040) shoulf be inserted.
Either 0 ohm res. or Delay shoulf be inserted.
U82
74ABTH25245DW
U83
74ABT541
U84
Delay-3pinSIP
U85
DS1040Z
U86
AD8561AR
Electronics Design Laboratory
Tim J. Sobering
124 Burt Hall
Kansas State University
Manhattan, KS 66506-0400
Title:
M002: Transceivers and termination Chan. B
Size
B
Document Number:
HEP008-M002
REV
0.4
Date: 8/6/99
Page 2 of 26

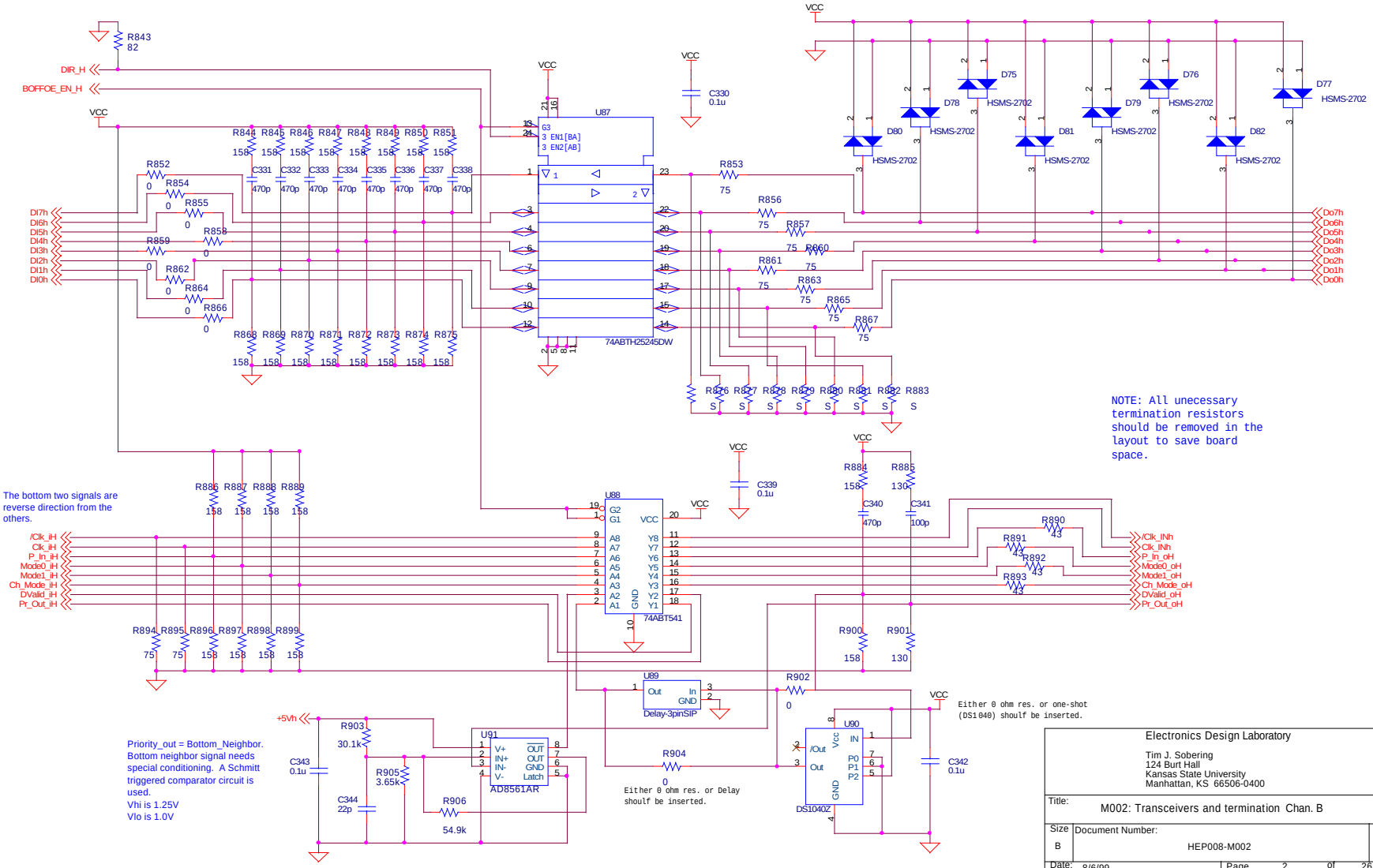

Electronics Design Laboratory

Tim J. Sobering
124 Burt Hall
Kansas State University
Manhattan, KS 66506-0400

Title: M002: Transceivers and termination Chan. B

Size	Document Number:	REV
B	HEP008-M002	0.4

Date: 8/6/99 Page 2 of 26

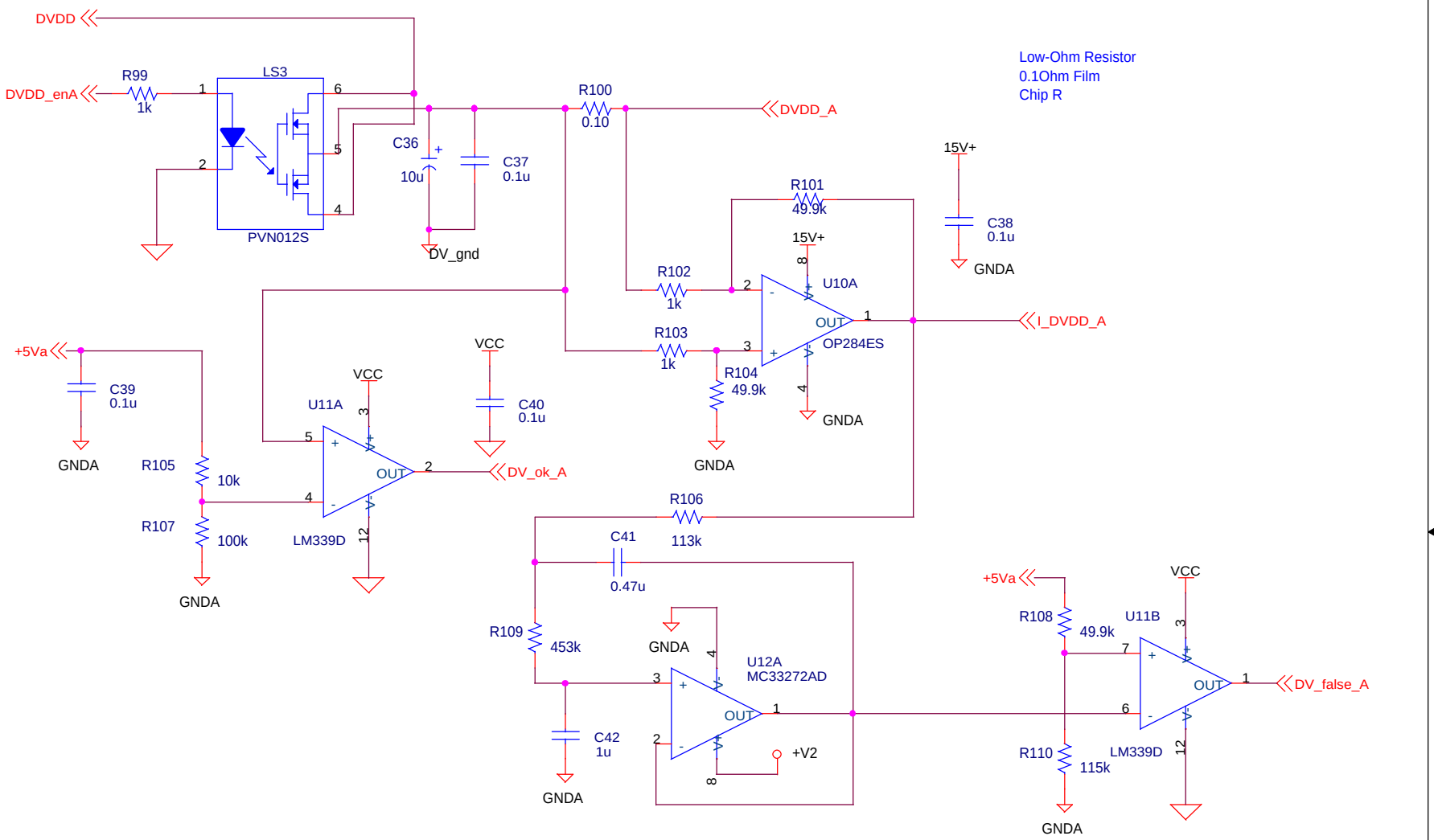

Sallen and Key 10 Hz. filter

Electronics Design Laboratory

Tim J. Sobering
124 Burt Hall
Kansas State University
Manhattan, KS 66506-0400

Title: DVDD Low Voltage Power Switch & Current Monitoring

Size	Document Number:	REV
A	HEP008-M016	0.4

Date: 8/6/99 Page 16 of 26

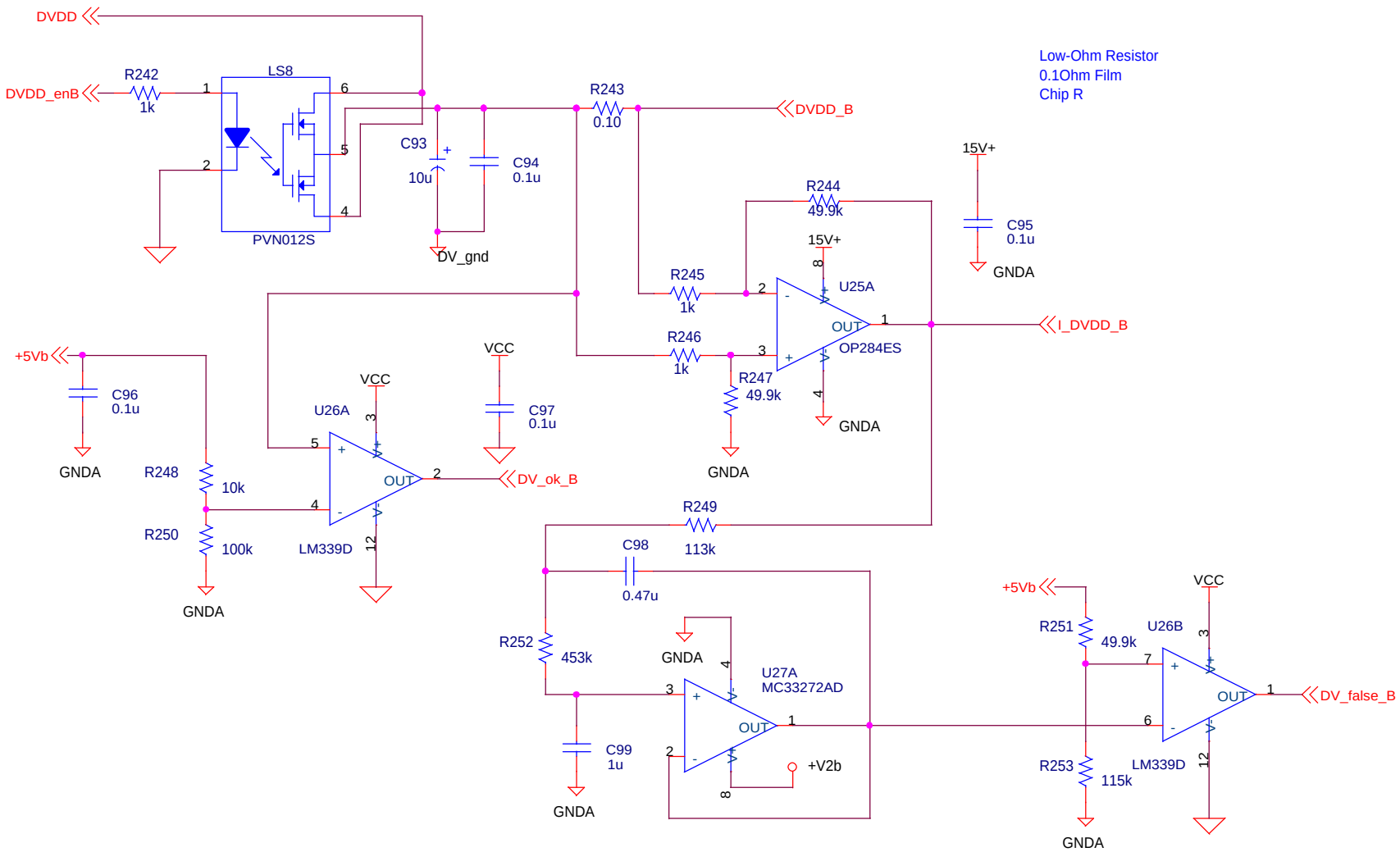

Sallen and Key 10 Hz. filter

Electronics Design Laboratory

Tim J. Sobering
124 Burt Hall
Kansas State University
Manhattan, KS 66506-0400

Title: DVDD Low Voltage Power Switch & Current Monitoring

Size	Document Number:	REV
A	HEP008-M016	0.4

Date: 8/6/99 Page 16 of 26

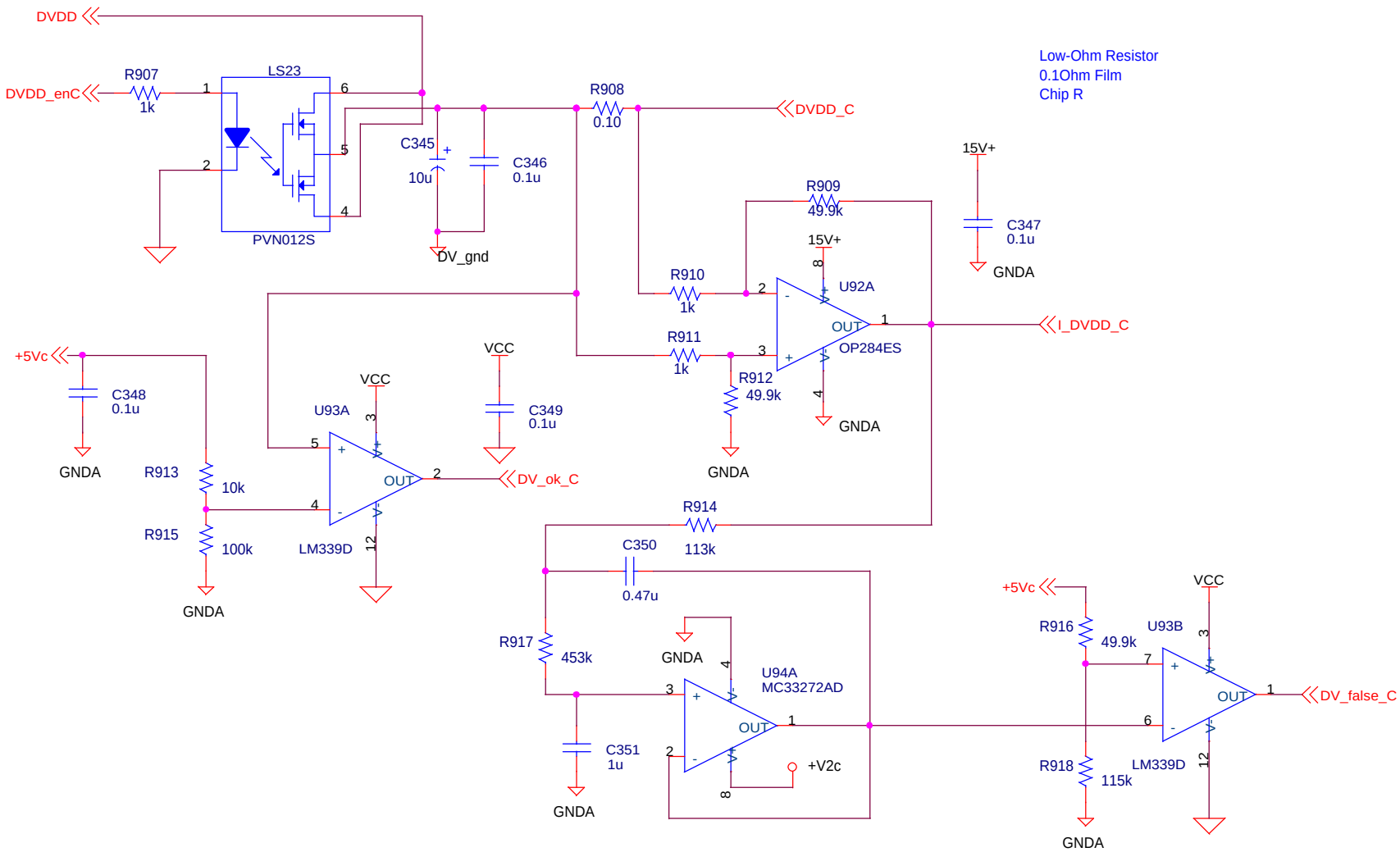

Sallen and Key 10 Hz. filter

Electronics Design Laboratory

Tim J. Sobering
124 Burt Hall
Kansas State University
Manhattan, KS 66506-0400

Title: DVDD Low Voltage Power Switch & Current Monitoring

Size	Document Number:	REV
A	HEP008-M016	0.4

Date: 8/6/99 Page 16 of 26

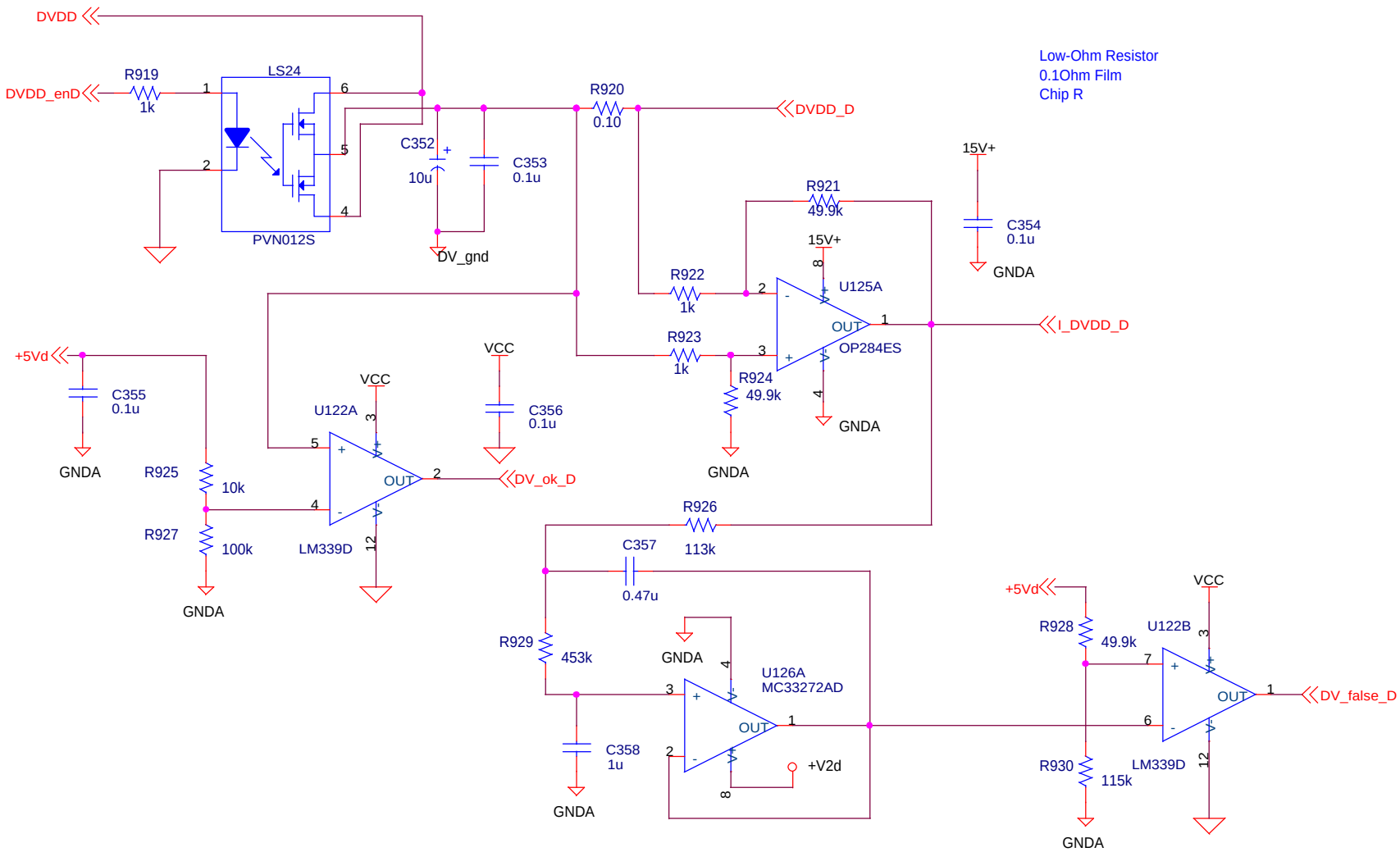

Sallen and Key 10 Hz. filter

Electronics Design Laboratory

Tim J. Sobering
124 Burt Hall
Kansas State University
Manhattan, KS 66506-0400

Title: DVDD Low Voltage Power Switch & Current Monitoring

Size	Document Number:	REV
A	HEP008-M016	0.4

Date: 8/6/99 Page 16 of 26

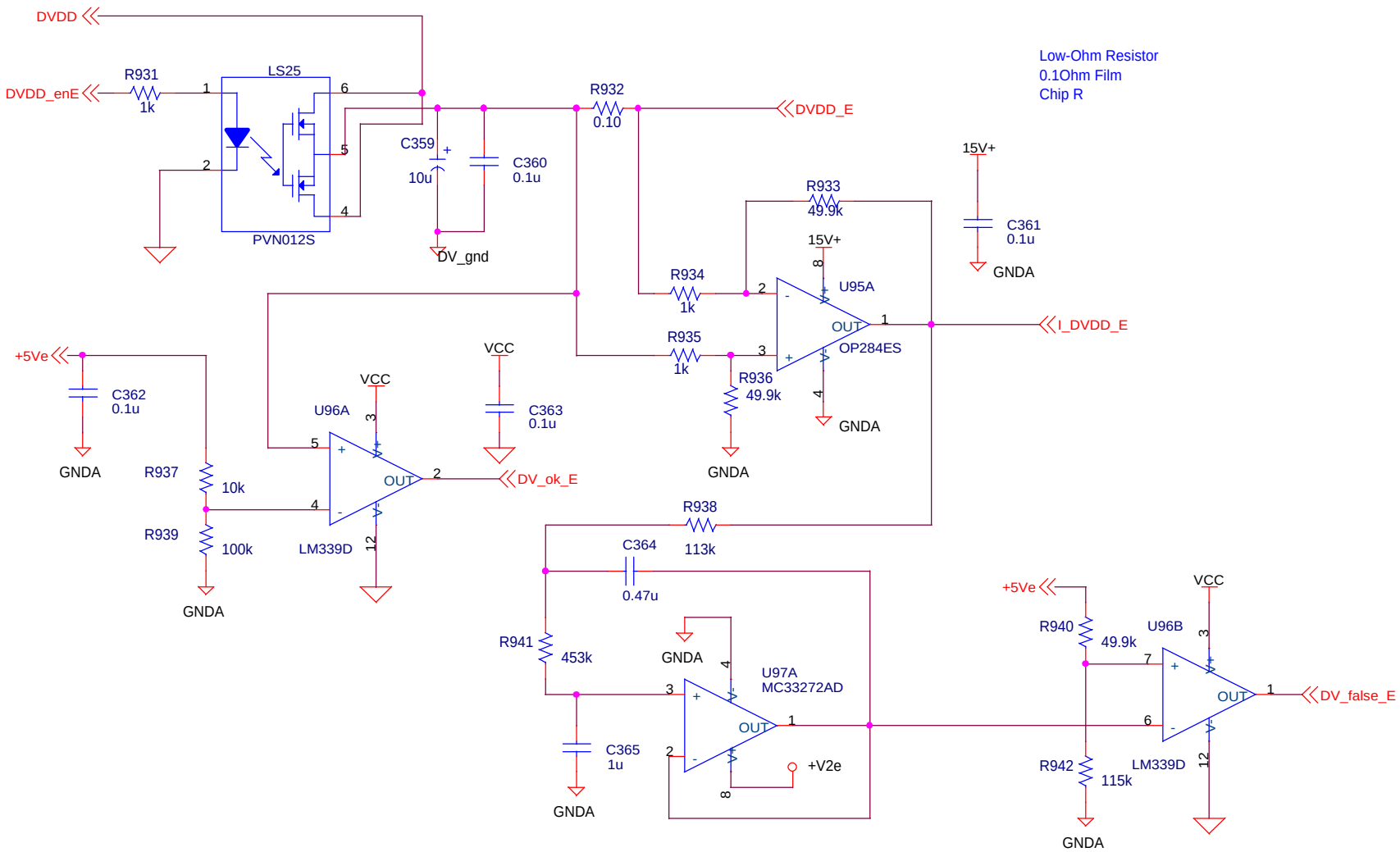

Sallen and Key 10 Hz. filter

Electronics Design Laboratory

Tim J. Sobering
124 Burt Hall
Kansas State University
Manhattan, KS 66506-0400

Title: DVDD Low Voltage Power Switch & Current Monitoring

Size	Document Number:	REV
A	HEP008-M016	0.4

Date: 8/6/99 Page 16 of 26

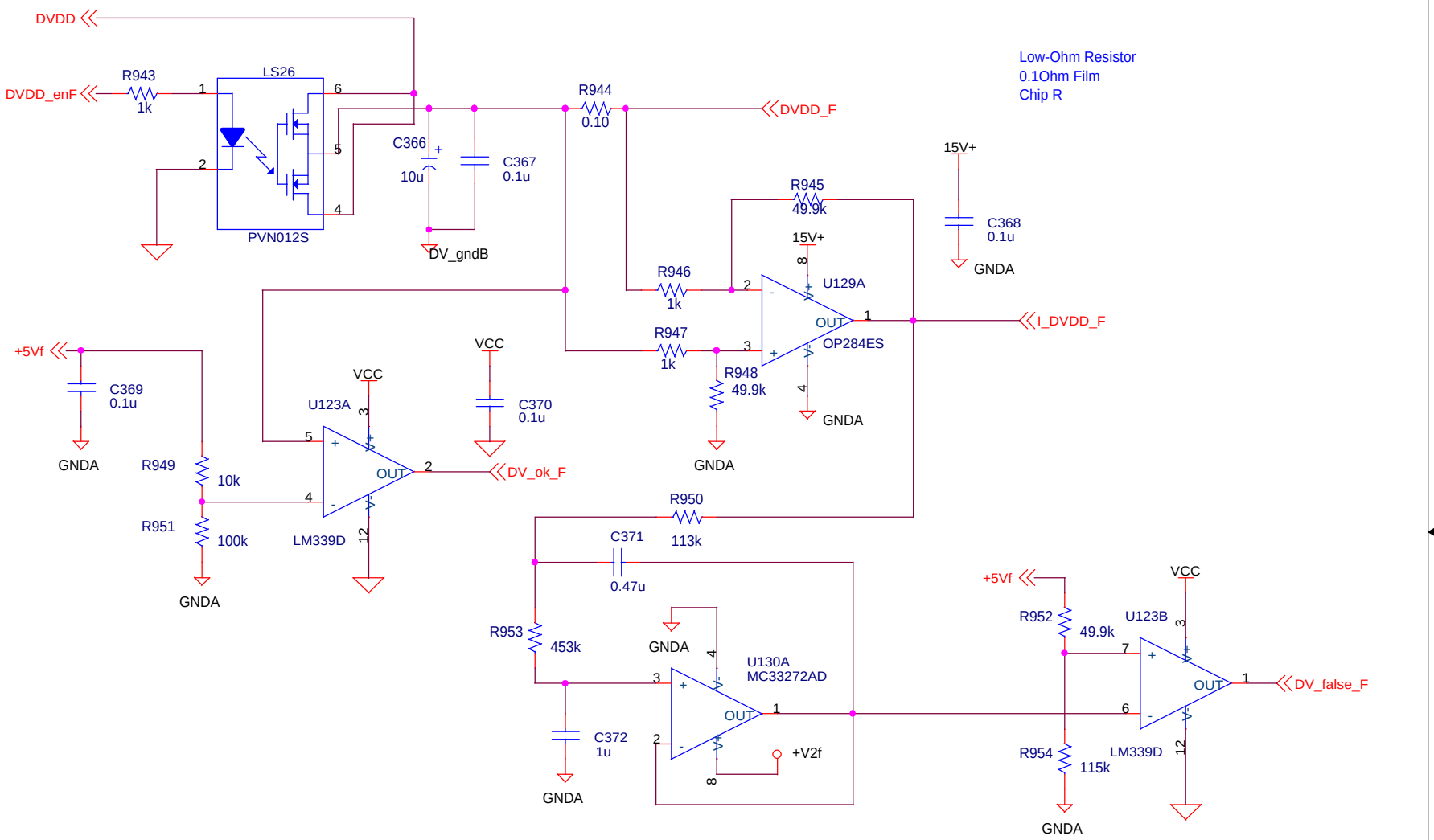

Sallen and Key 10 Hz. filter

Electronics Design Laboratory

Tim J. Sobering
124 Burt Hall
Kansas State University
Manhattan, KS 66506-0400

Title: DVDD Low Voltage Power Switch & Current Monitoring

Size	Document Number:	REV
A	HEP008-M016	0.4

Date: 8/6/99 Page 16 of 26

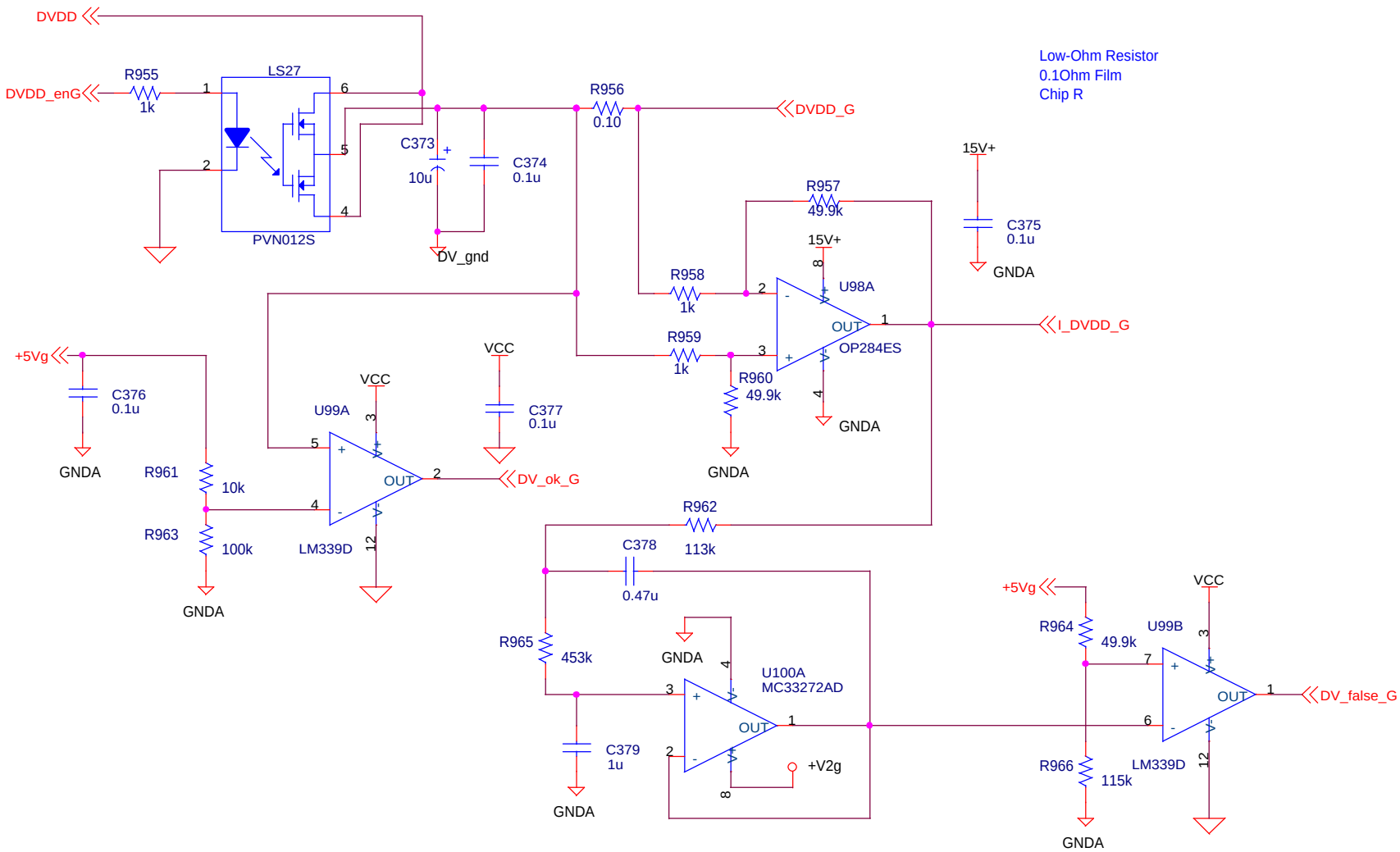

Sallen and Key 10 Hz. filter

Electronics Design Laboratory

Tim J. Sobering
124 Burt Hall
Kansas State University
Manhattan, KS 66506-0400

Title: DVDD Low Voltage Power Switch & Current Monitoring

Size	Document Number:	REV
A	HEP008-M016	0.4

Date: 8/6/99 Page 16 of 26

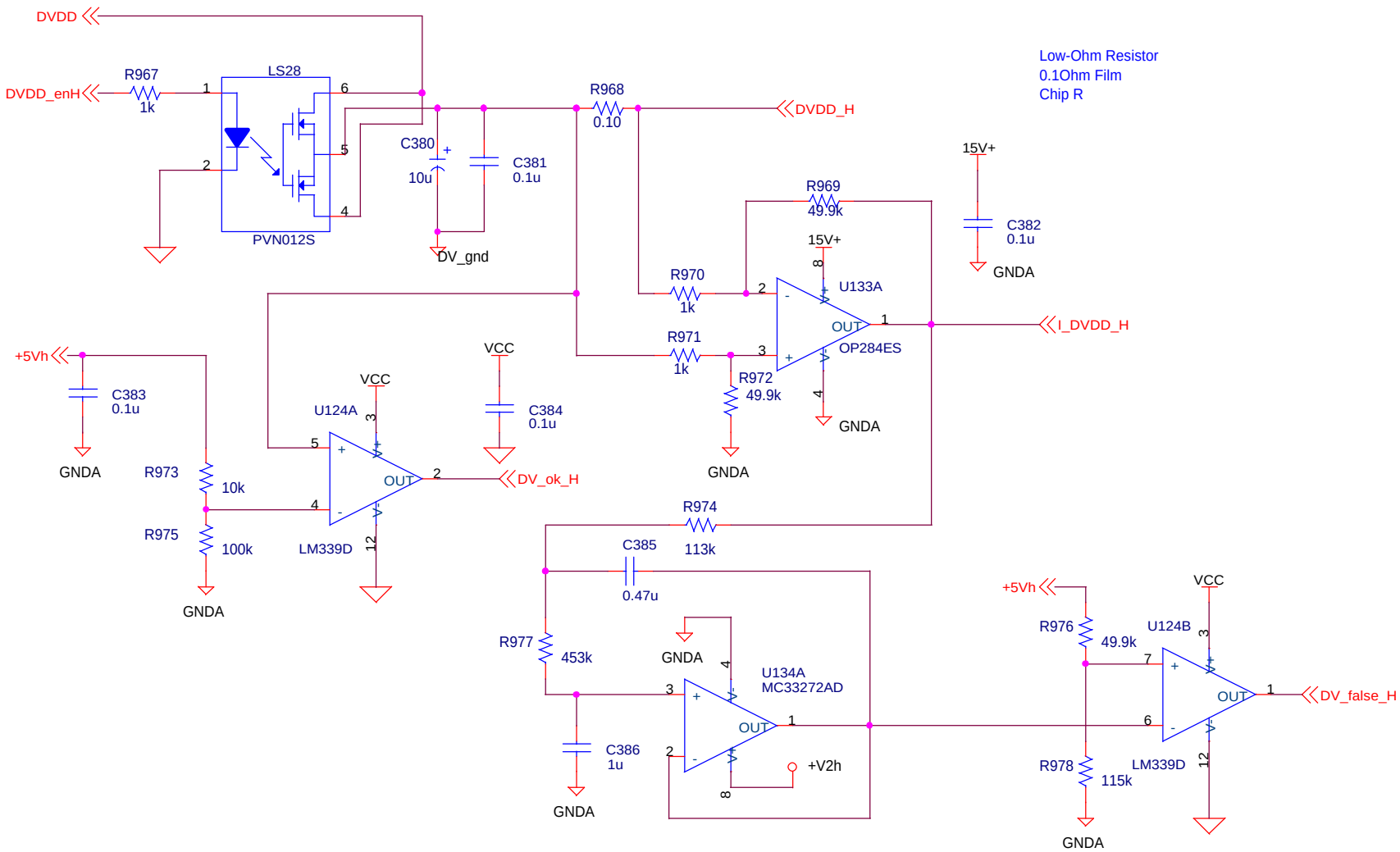

Sallen and Key 10 Hz. filter

Electronics Design Laboratory

Tim J. Sobering
124 Burt Hall
Kansas State University
Manhattan, KS 66506-0400

Title: DVDD Low Voltage Power Switch & Current Monitoring

Size	Document Number:	REV
A	HEP008-M016	0.4

Date: 8/6/99 Page 16 of 26

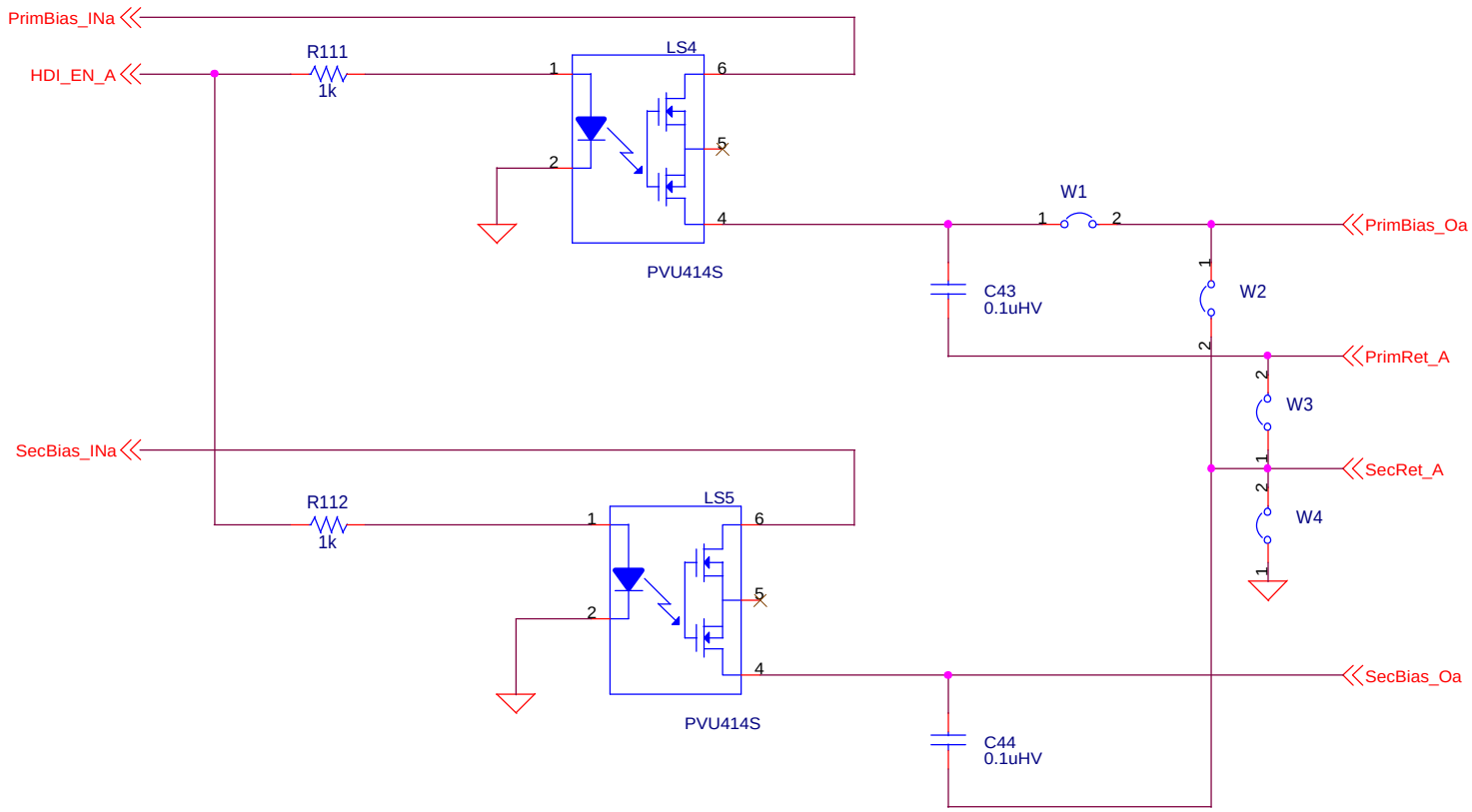

Electronics Design Laboratory

Tim J. Sobering
124 Burt Hall
Kansas State University
Manhattan, KS 66506-0400

Title: High Voltage Power Switching

Size	Document Number:	REV
A	HEP008-M022	3

Date: 8/6/99 Page 22 of 26

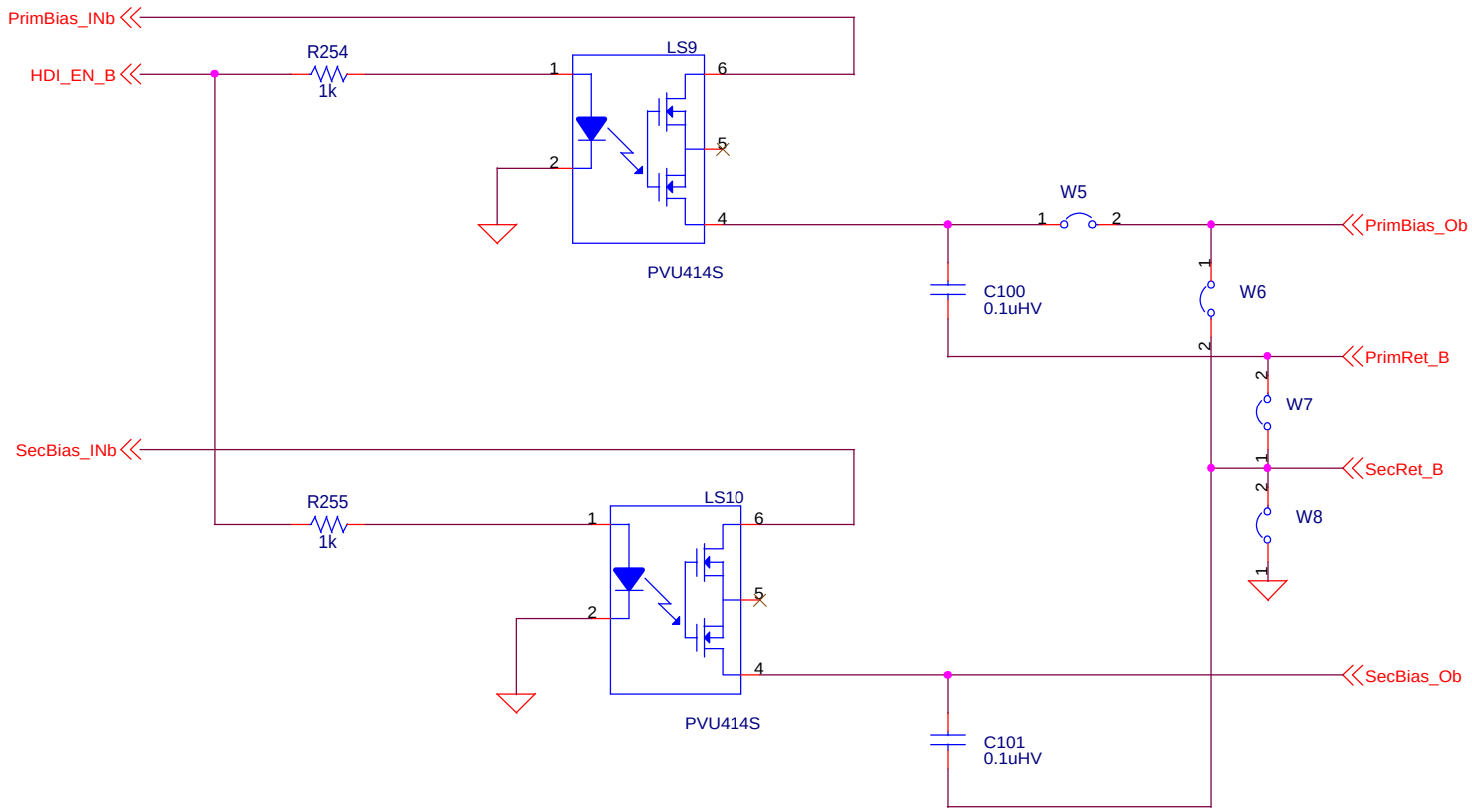

Electronics Design Laboratory

Tim J. Sobering
124 Burt Hall
Kansas State University
Manhattan, KS 66506-0400

Title: High Voltage Power Switching

Size	Document Number:	REV
A	HEP008-M022	3

Date: 8/6/99 Page 22 of 26

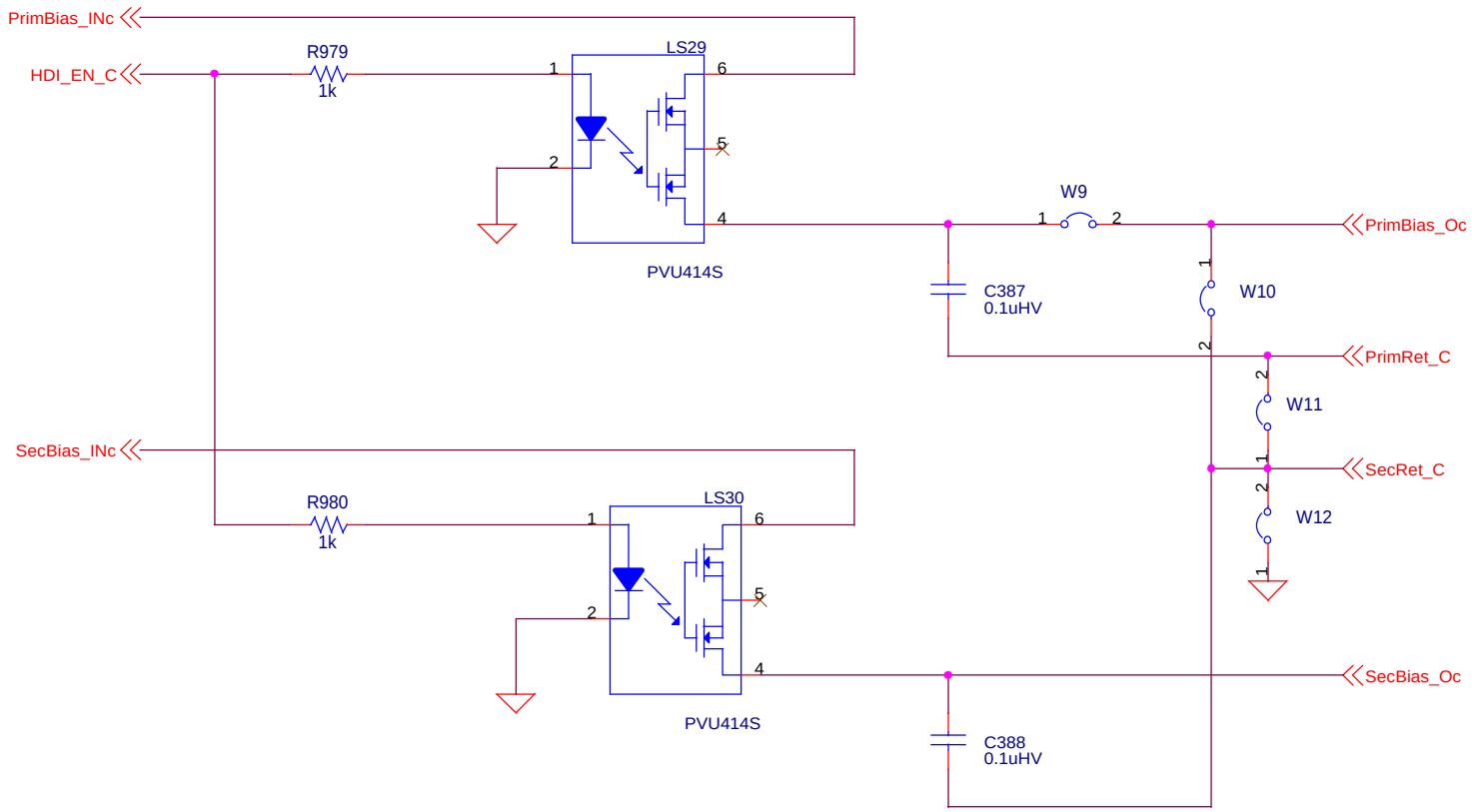

Electronics Design Laboratory

Tim J. Sobering
124 Burt Hall
Kansas State University
Manhattan, KS 66506-0400

Title: High Voltage Power Switching

Size	Document Number:	REV
A	HEP008-M022	3

Date: 8/6/99 Page 22 of 26

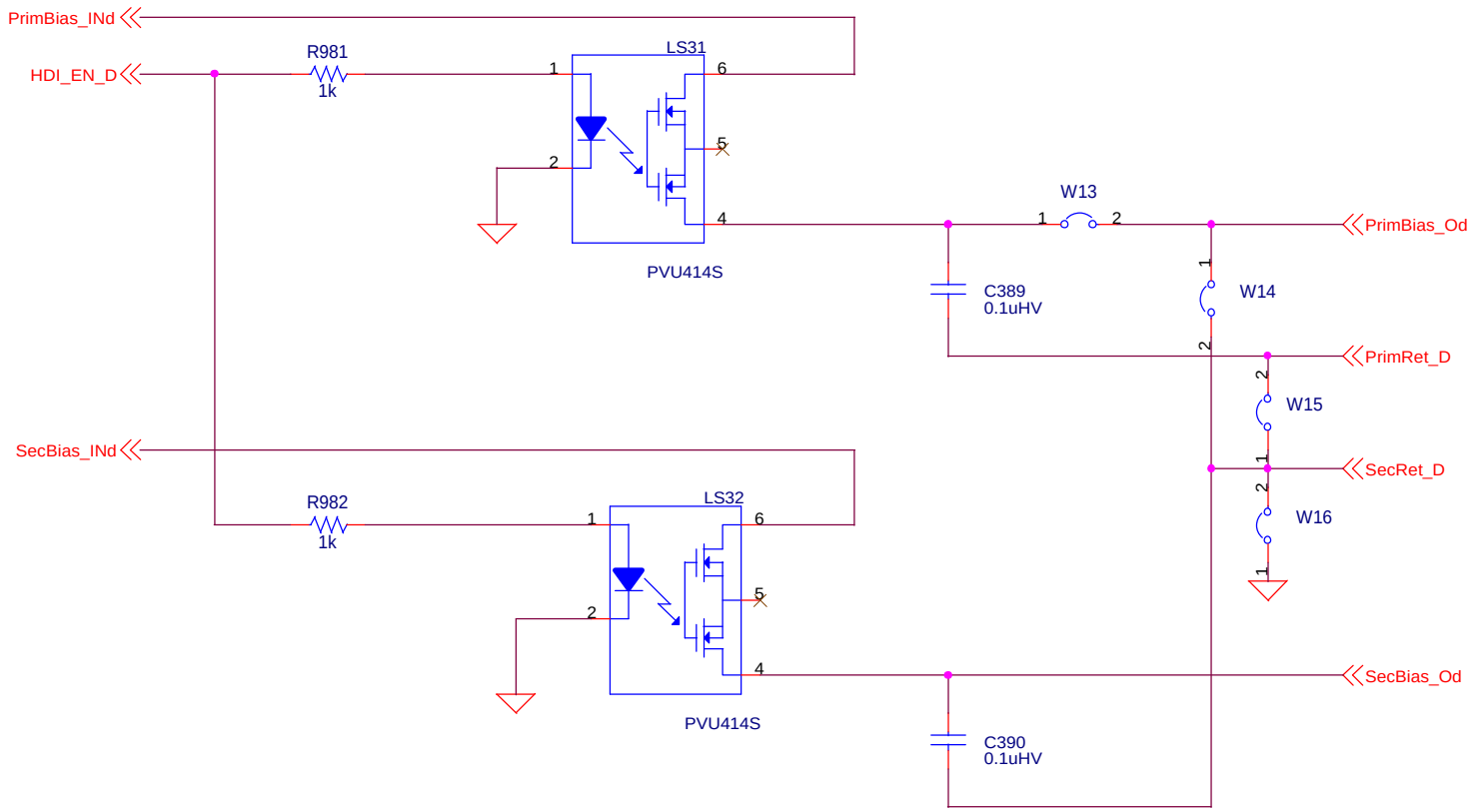

Electronics Design Laboratory

Tim J. Sobering
124 Burt Hall
Kansas State University
Manhattan, KS 66506-0400

Title: High Voltage Power Switching

Size	Document Number:	REV
A	HEP008-M022	3

Date: 8/6/99 Page 22 of 26

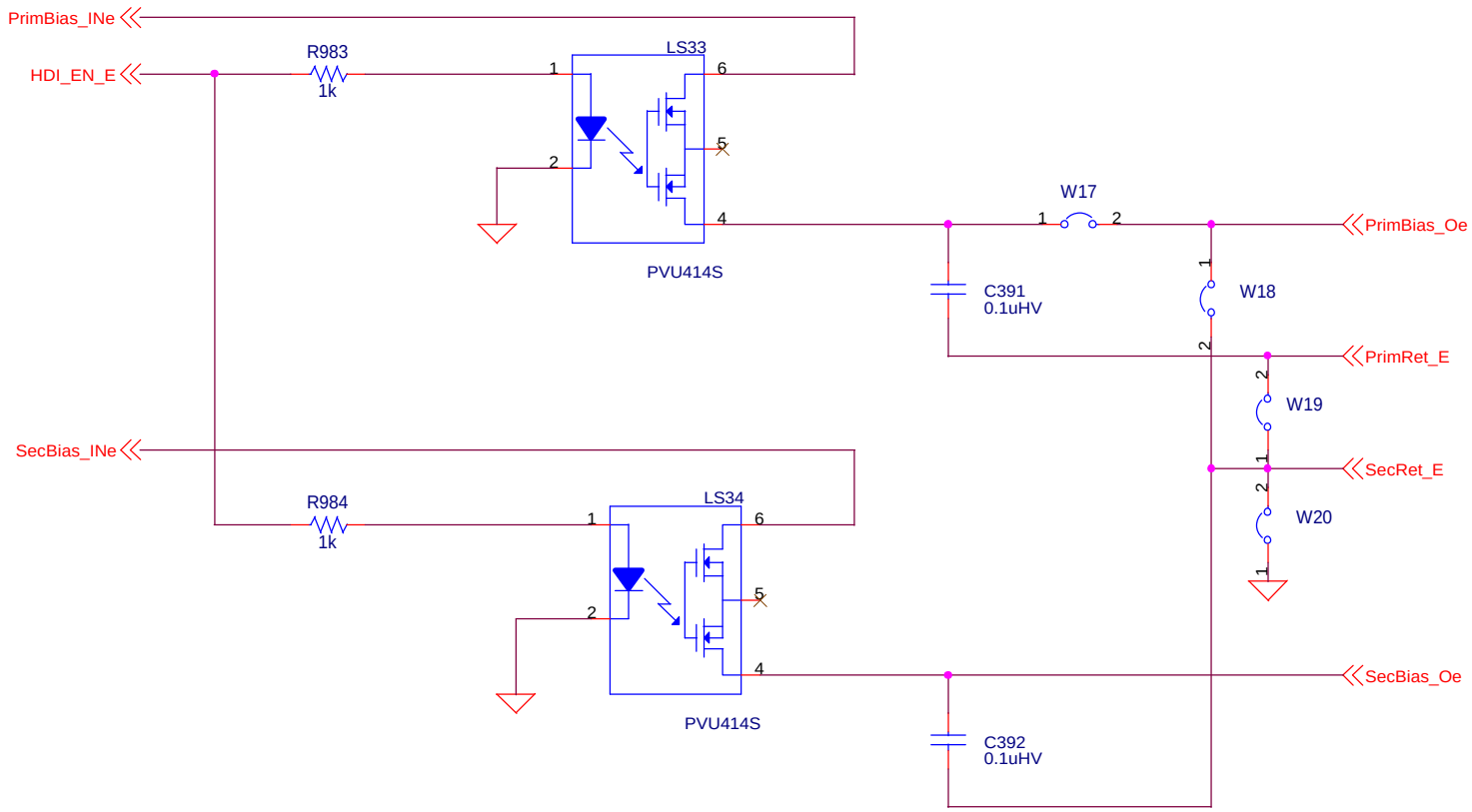

Electronics Design Laboratory

Tim J. Sobering
124 Burt Hall
Kansas State University
Manhattan, KS 66506-0400

Title: High Voltage Power Switching

Size	Document Number:	REV
A	HEP008-M022	3

Date: 8/6/99 Page 22 of 26

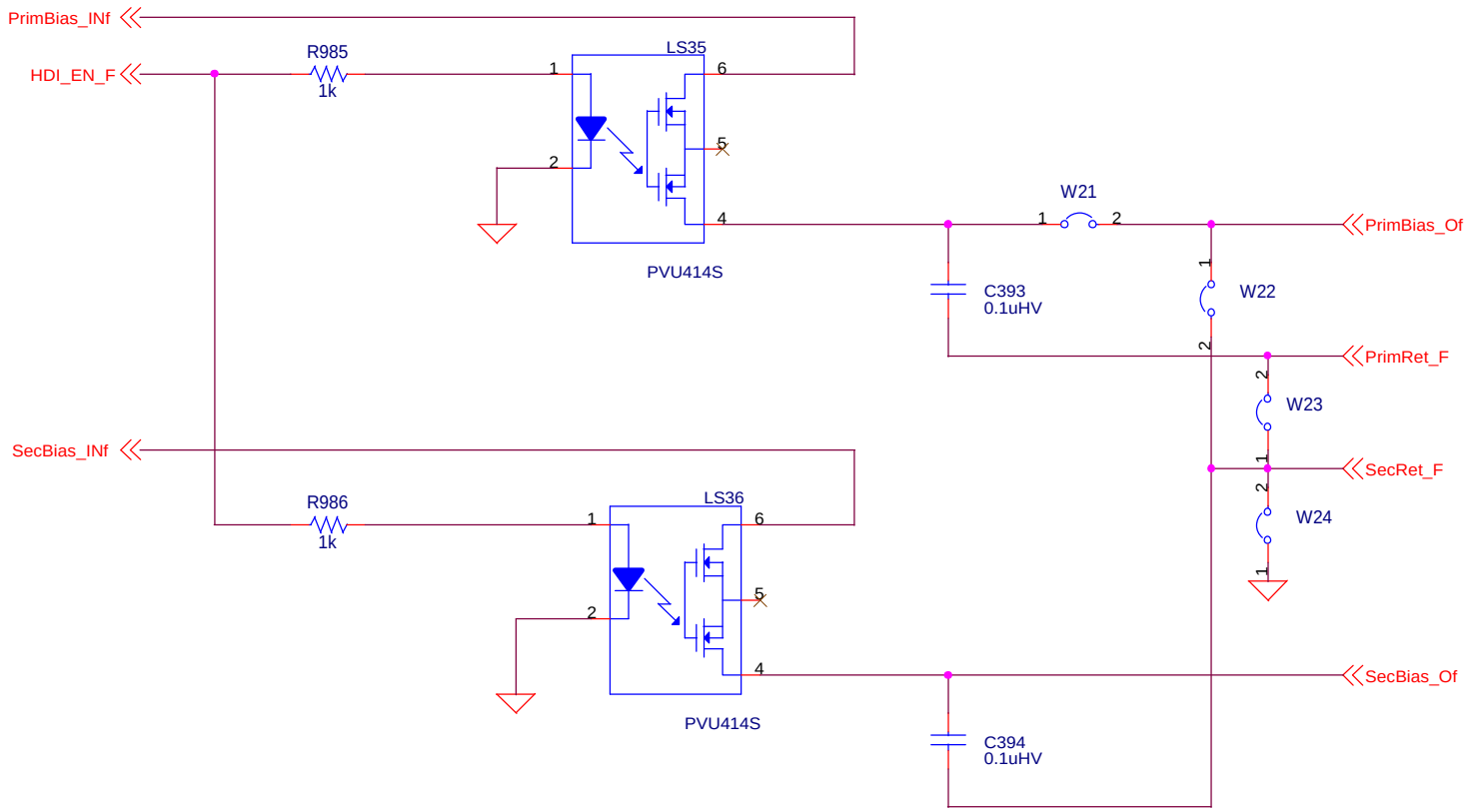

Electronics Design Laboratory

Tim J. Sobering
124 Burt Hall
Kansas State University
Manhattan, KS 66506-0400

Title: High Voltage Power Switching

Size	Document Number:	REV
A	HEP008-M022	3

Date: 8/6/99 Page 22 of 26

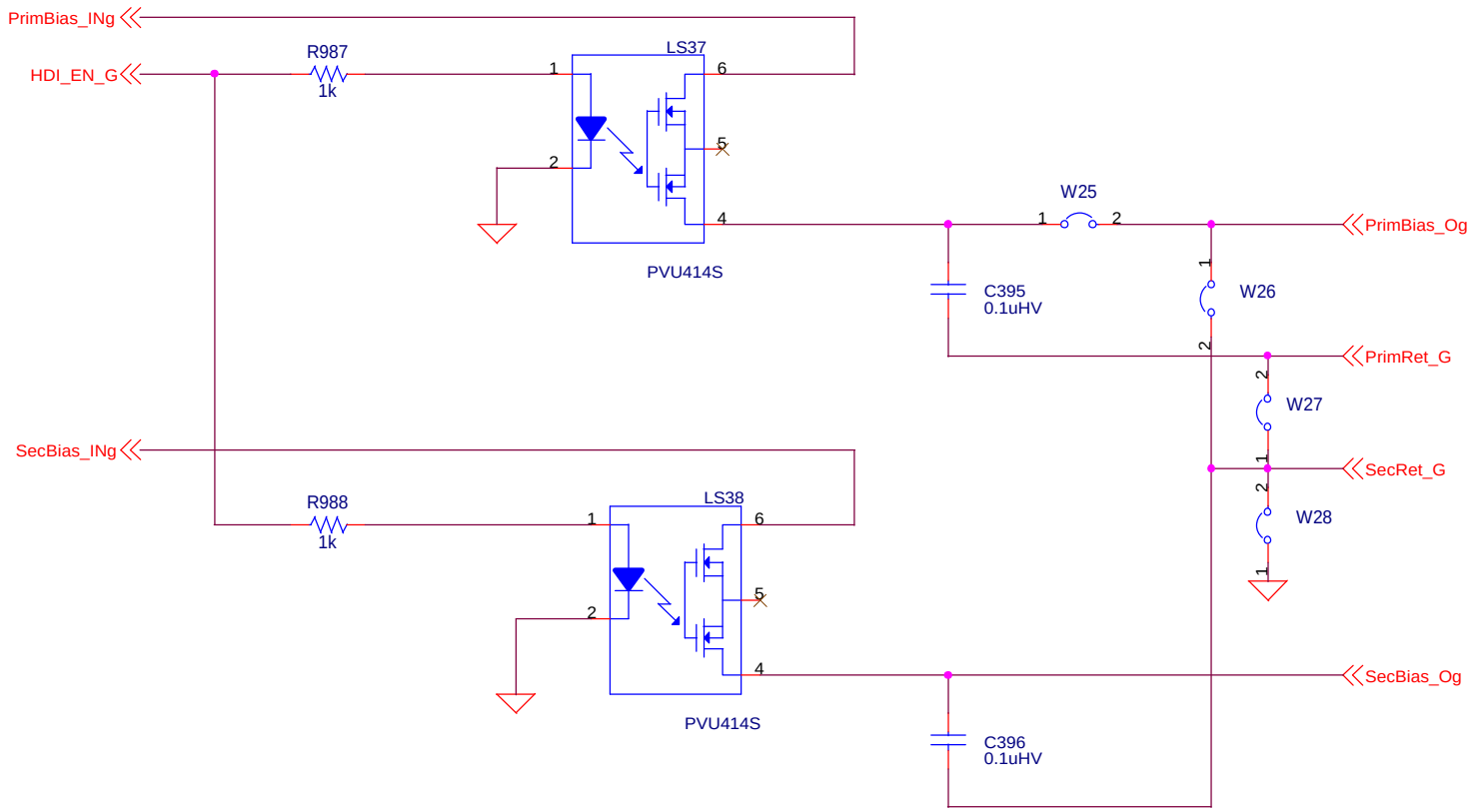

Electronics Design Laboratory

Tim J. Sobering
124 Burt Hall
Kansas State University
Manhattan, KS 66506-0400

Title: High Voltage Power Switching

Size	Document Number:	REV
A	HEP008-M022	3

Date: 8/6/99 Page 22 of 26

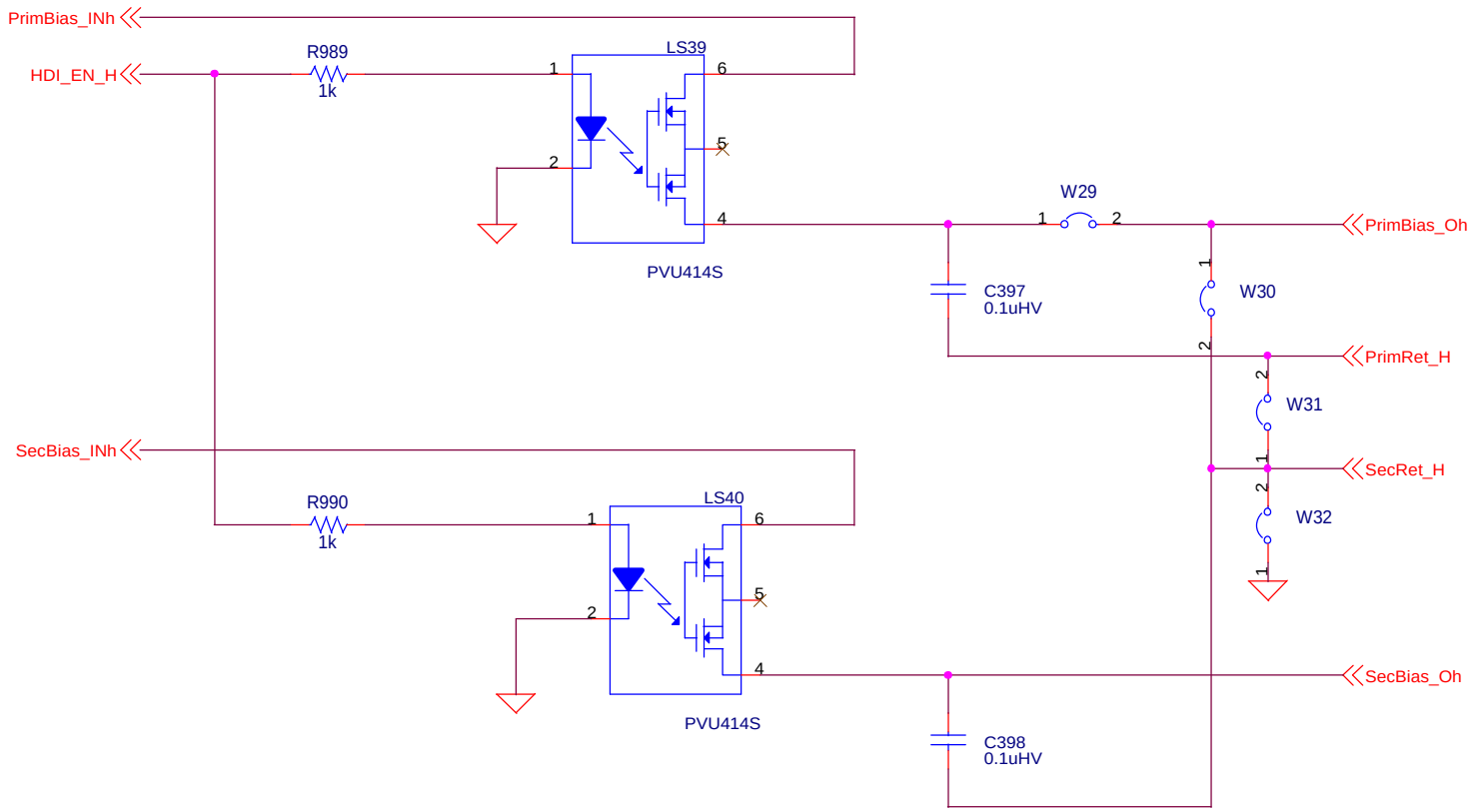

Electronics Design Laboratory

Tim J. Sobering
124 Burt Hall
Kansas State University
Manhattan, KS 66506-0400

Title: High Voltage Power Switching

Size	Document Number:	REV
A	HEP008-M022	3

Date: 8/6/99 Page 22 of 26

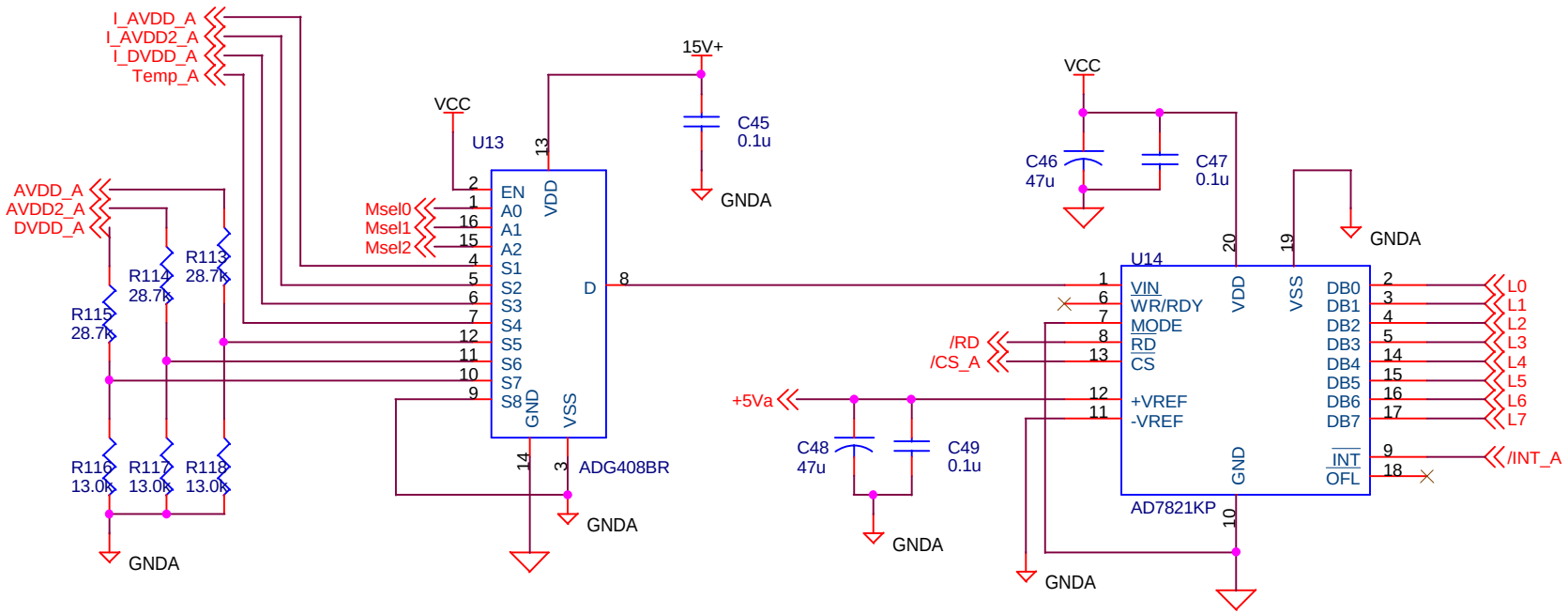

Title	Signal Mux & ADC	
Size A	Document Number <Doc>	Rev 3
Date: Tuesday, October 05, 1999	Sheet 53 of 97	

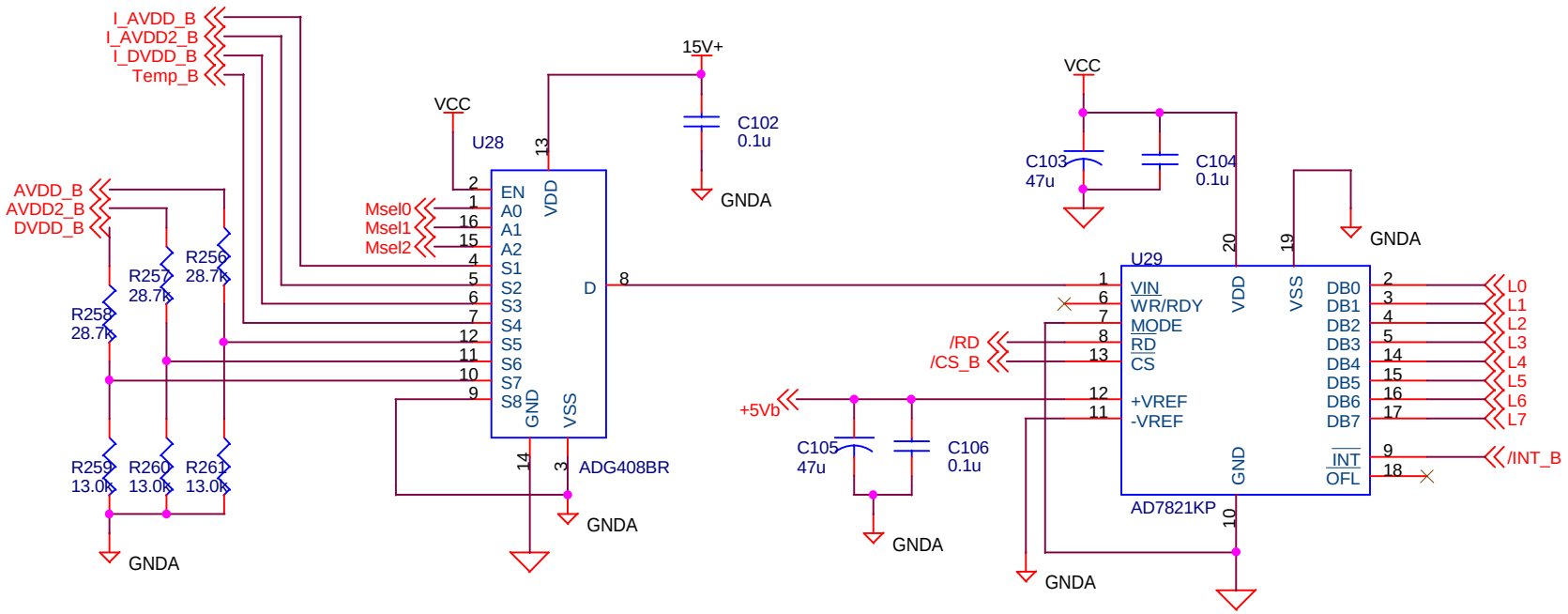

Title	Signal Mux & ADC	
Size A	Document Number <Doc>	Rev 3
Date: Tuesday, October 05, 1999	Sheet 54 of 97	

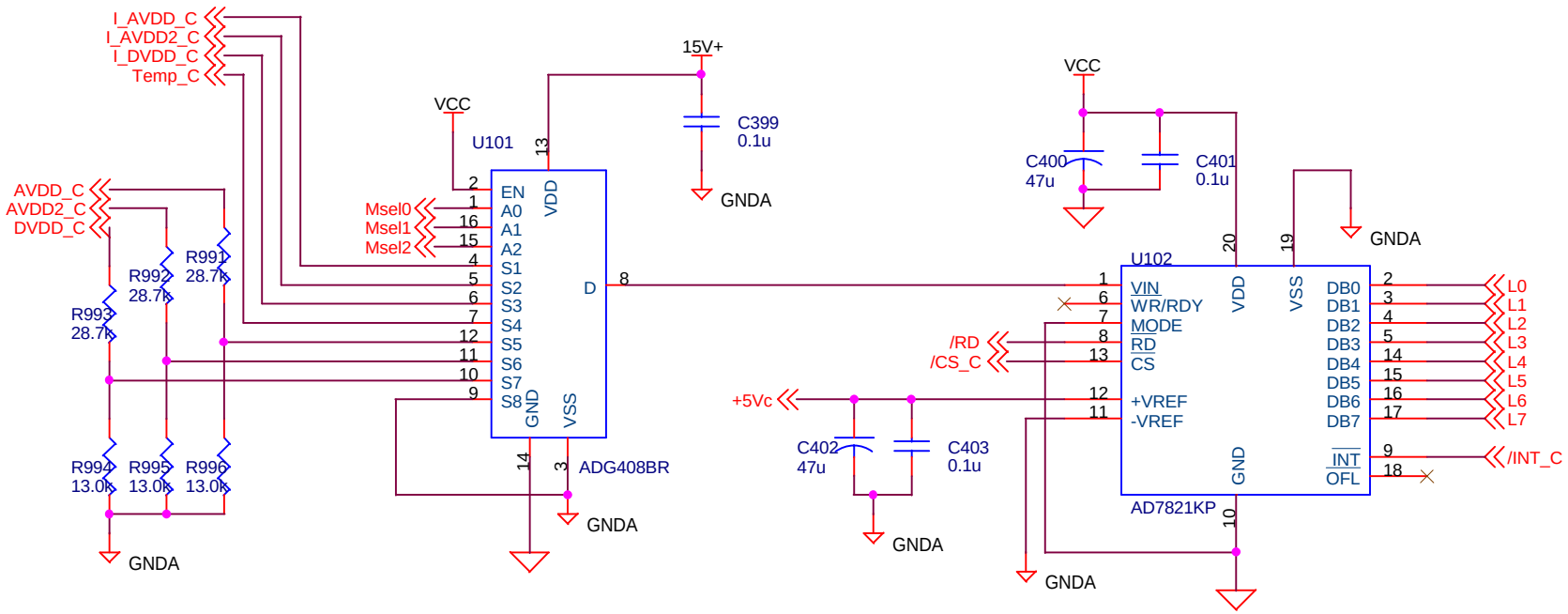

Title	Signal Mux & ADC	
Size A	Document Number <Doc>	Rev 3
Date: Tuesday, October 05, 1999	Sheet 55 of 97	

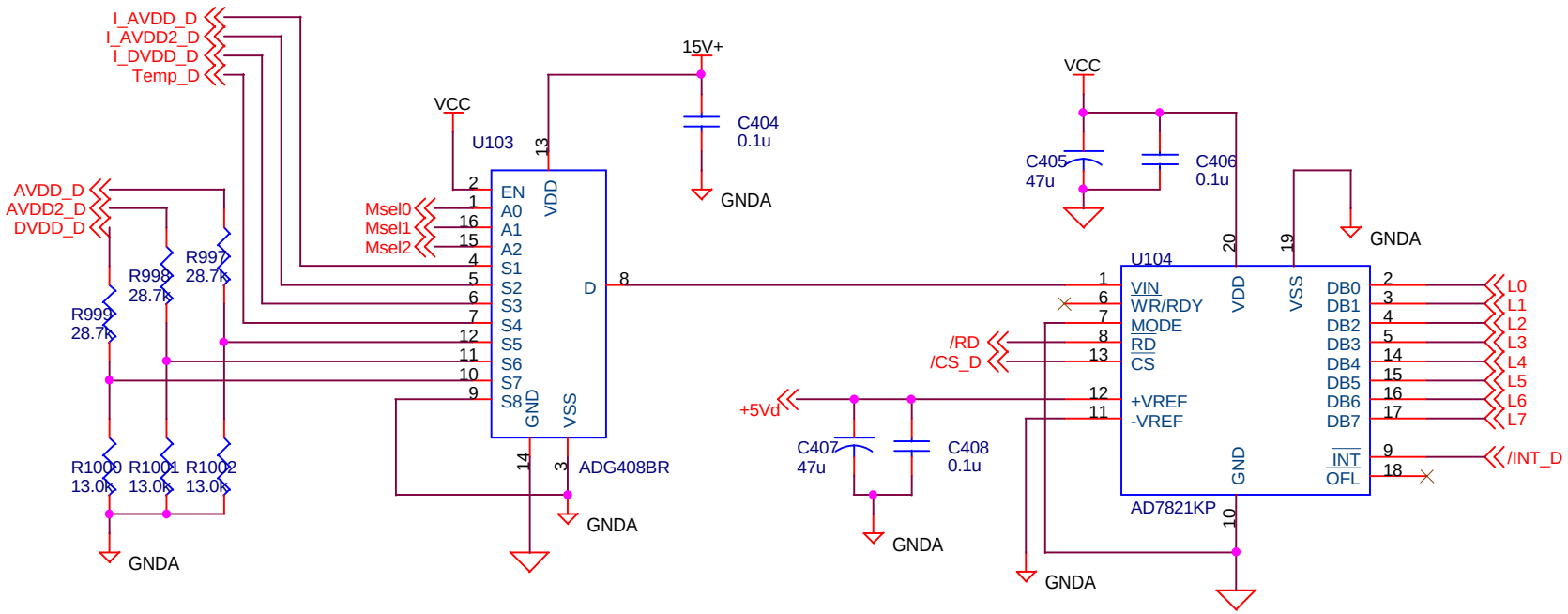

Title	Signal Mux & ADC	
Size A	Document Number <Doc>	Rev 3
Date: Tuesday, October 05, 1999	Sheet 56 of 97	

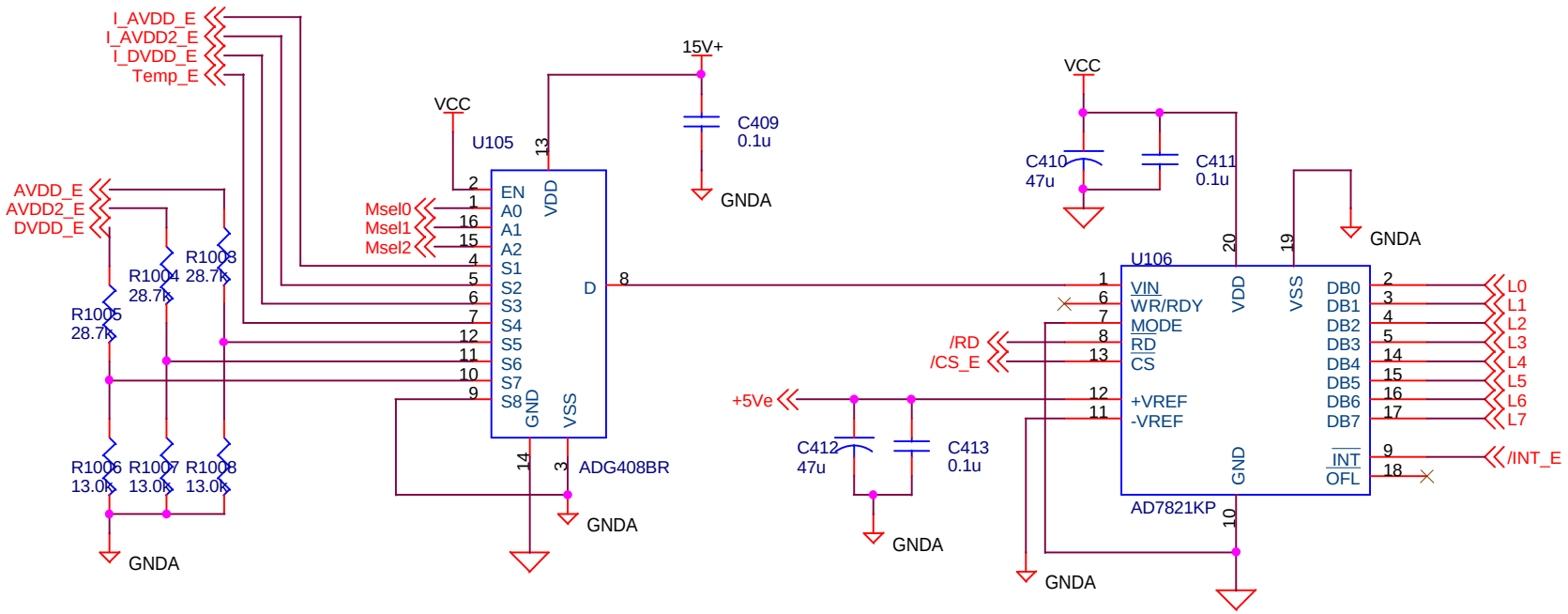

Title	Signal Mux & ADC	
Size A	Document Number <Doc>	Rev 3
Date: Tuesday, October 05, 1999	Sheet 57 of 97	

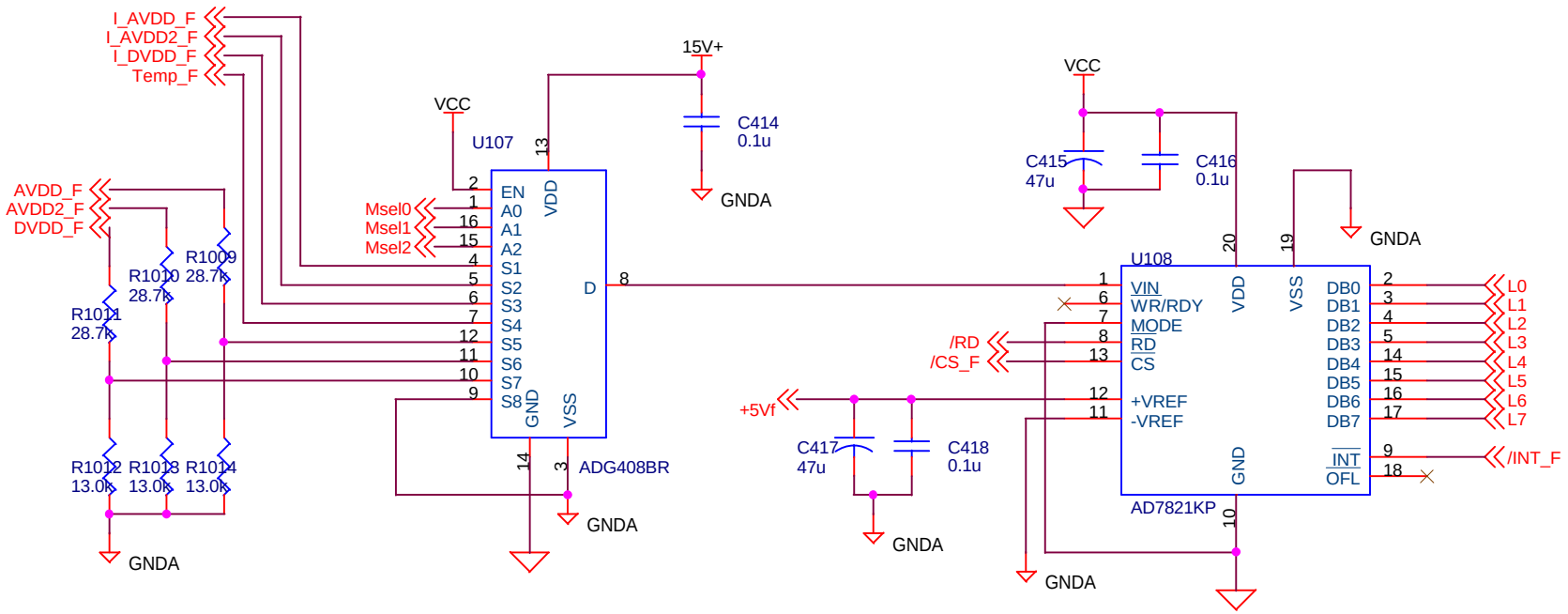

Title	Signal Mux & ADC	
Size A	Document Number <Doc>	Rev 3
Date: Tuesday, October 05, 1999	Sheet 58 of 97	

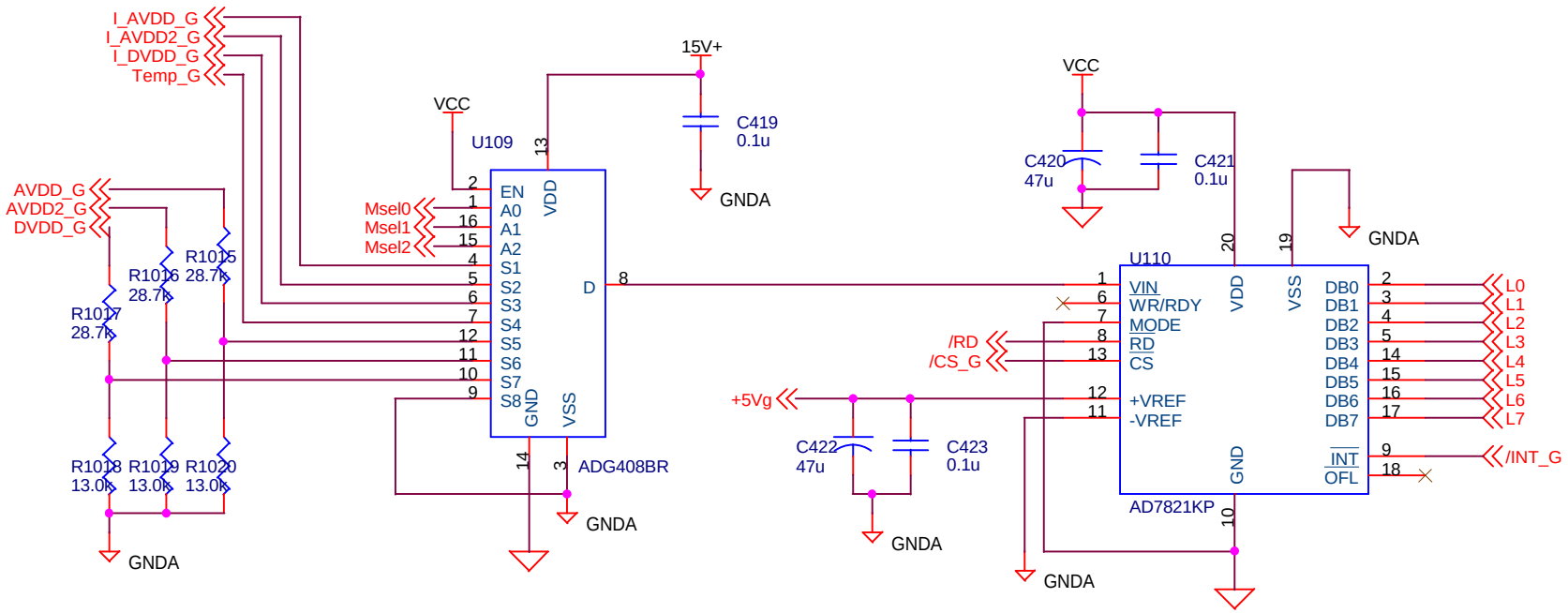

Title	Signal Mux & ADC	
Size A	Document Number <Doc>	Rev 3
Date: Tuesday, October 05, 1999	Sheet 59 of 97	

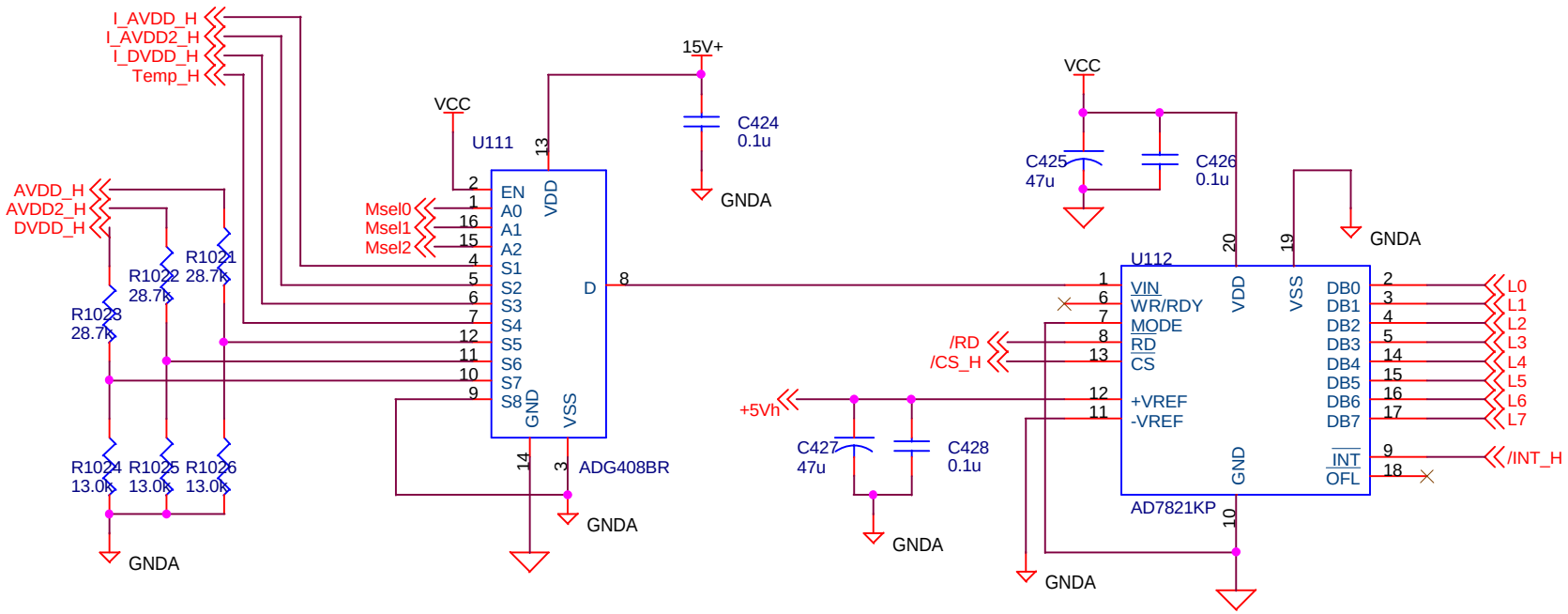

Title	Signal Mux & ADC	
Size A	Document Number <Doc>	Rev 3
Date: Tuesday, October 05, 1999	Sheet 60 of 97	

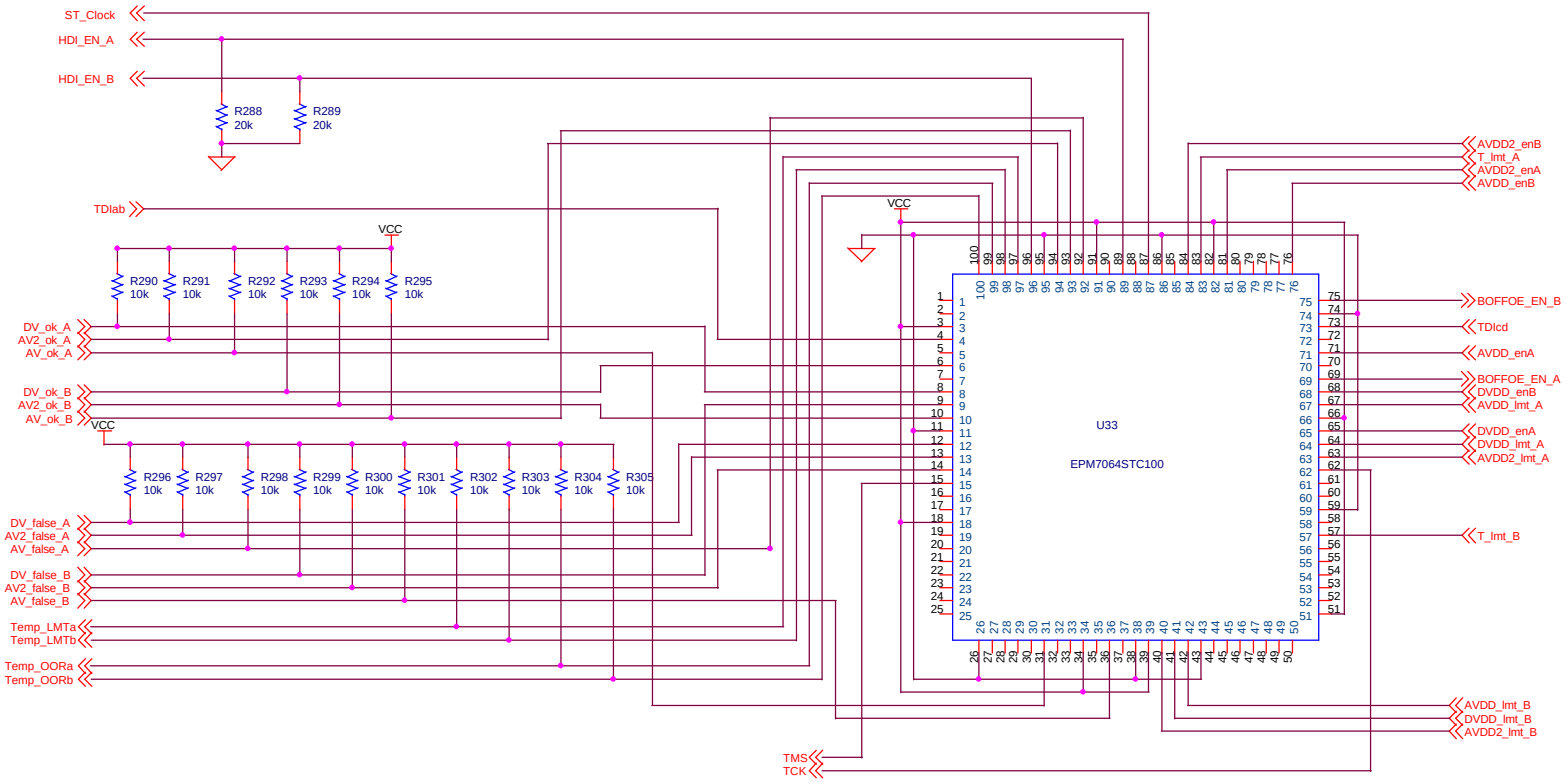

Capacitors are for VCC pins 3, 18, 34, 39, 51, 66, 82, and 91 on the Altera chip. Pins 11, 26, 38, 43, 59, 74, 86, and 95 are tied to ground, as programmed by R. Taylor.

The enable signals are anticipated to be active high.

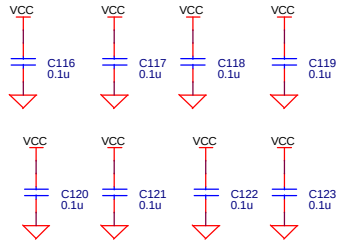

EMP7064STC100 is a 44-pin smd device (Altera). It can be programmed on board with an Altera Bit-Blaster.

TCK
TMS

Electronics Design Laboratory

Tim J. Sobering
124 Burt Hall
Kansas State University
Manhattan, KS 66506-0400

Title: M013: Chan. A Power Control

Size	Document Number:	REV
A	HEP008-M013	3

Date: 9/10/1999 Page 13 of 26

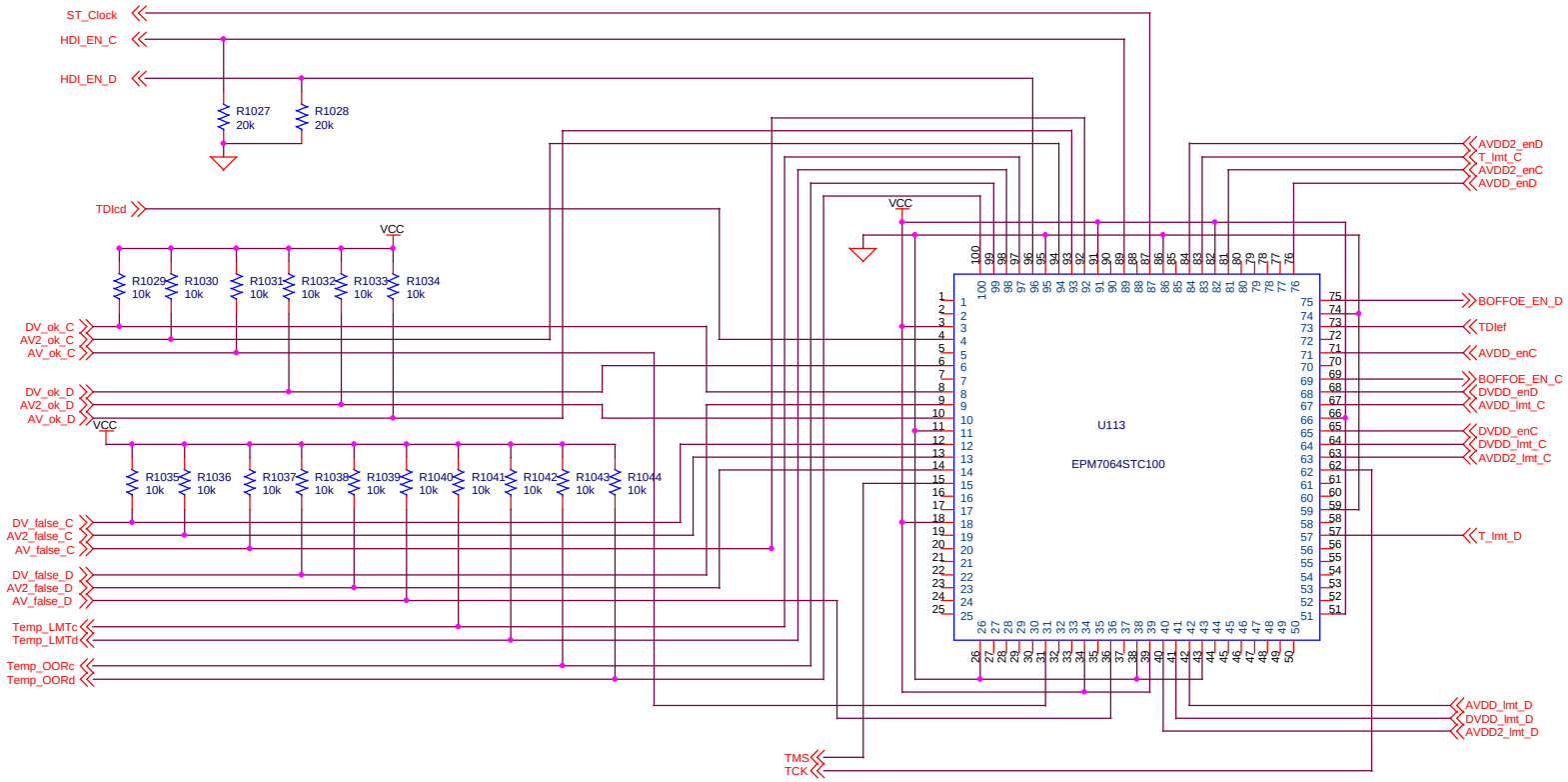

Capacitors are for VCC pins 3, 18, 34, 39, 51, 66, 82, and 91 on the Altera chip. Pins 11, 26, 38, 43, 59, 74, 86, and 95 are tied to ground, as programmed by R. Taylor.

The enable signals are anticipated to be active high.

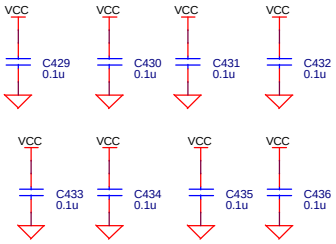

EMP7064STC100 is a 44-pin smd device (Altera). It can be programmed on board with an Altera Bit-Blaster.

TCK
TMS

Electronics Design Laboratory

Tim J. Sobering
124 Burt Hall
Kansas State University
Manhattan, KS 66506-0400

Title: M013: Chan. A Power Control

Size	Document Number:	REV
A	HEP008-M013	3

Date: 9/10/1999 Page 13 of 26

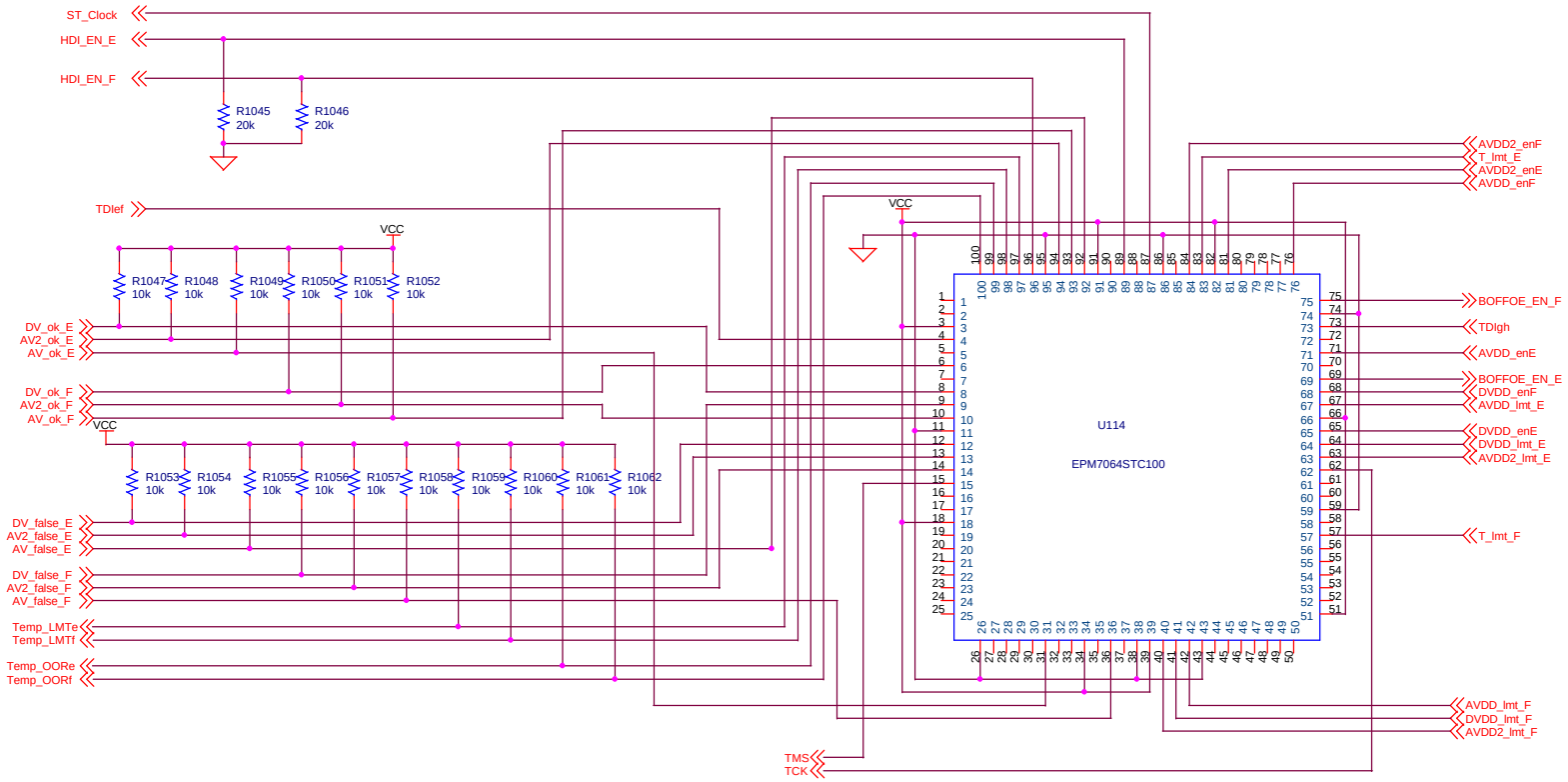

Capacitors are for VCC pins 3, 18, 34, 39, 51, 66, 82, and 91 on the Altera chip. Pins 11, 26, 38, 43, 59, 74, 86, and 95 are tied to ground, as programmed by R. Taylor.

The enable signals are anticipated to be active high.

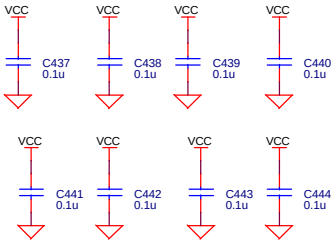

EMP7064STC100 is a 44-pin smd device (Altera). It can be programmed on board with an Altera Bit-Blaster.

Electronics Design Laboratory

Tim J. Sobering
124 Burt Hall
Kansas State University
Manhattan, KS 66506-0400

Title: M013: Chan. A Power Control

Size	Document Number:	REV
A	HEP008-M013	3

Date: 9/10/1999 Page 13 of 26

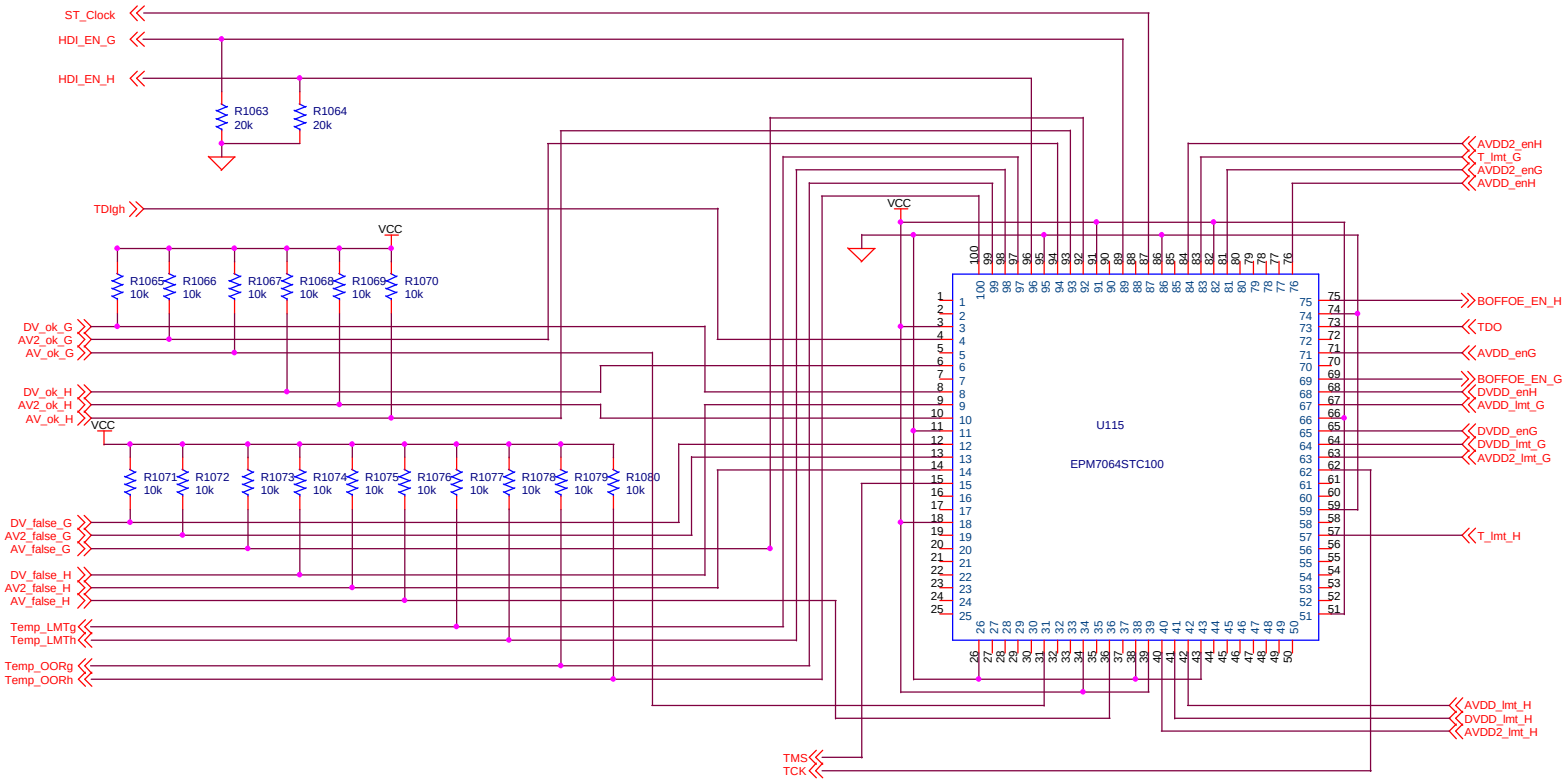

Capacitors are for VCC pins 3, 18, 34, 39, 51, 66, 82, and 91 on the Altera chip. Pins 11, 26, 38, 43, 59, 74, 86, and 95 are tied to ground, as programmed by R. Taylor.

The enable signals are anticipated to be active high.

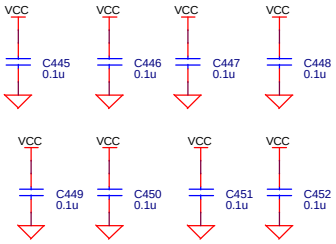

EMP7064STC100 is a 44-pin smd device (Altera). It can be programmed on board with an Altera Bit-Blaster.

TCK
TMS

Electronics Design Laboratory

Tim J. Sobering
124 Burt Hall
Kansas State University
Manhattan, KS 66506-0400

Title: M013: Chan. A Power Control

Size	Document Number:	REV
A	HEP008-M013	3

Date: 9/10/1999 Page 13 of 26

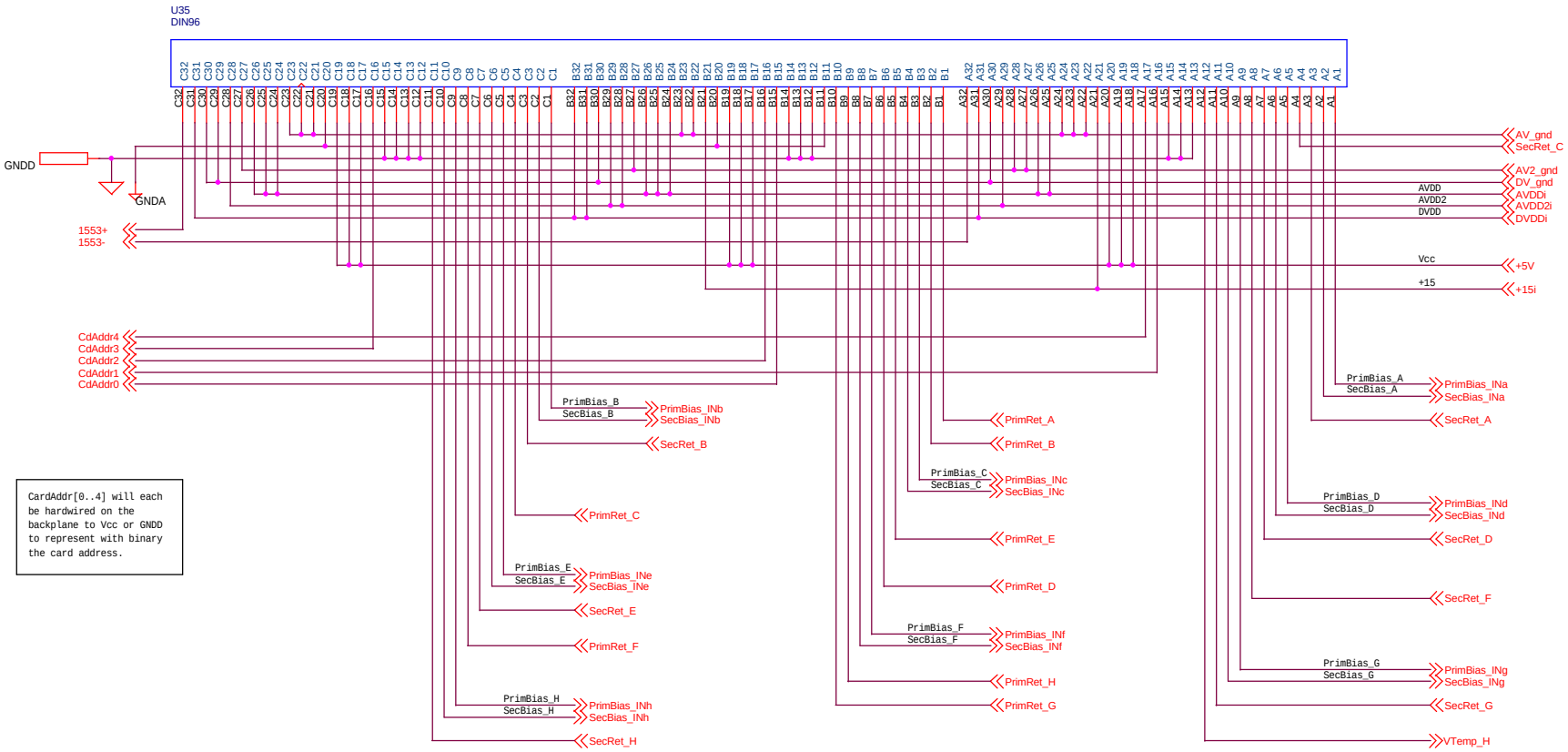

CardAddr[0..4] will each be hardwired on the backplane to Vcc or GNDD to represent with binary the card address.

Title	Power Connector & HV Relays	
Size B	Document Number <Doc>	Rev 3
Date: Tuesday, October 05, 1999	Sheet 65 of 97	

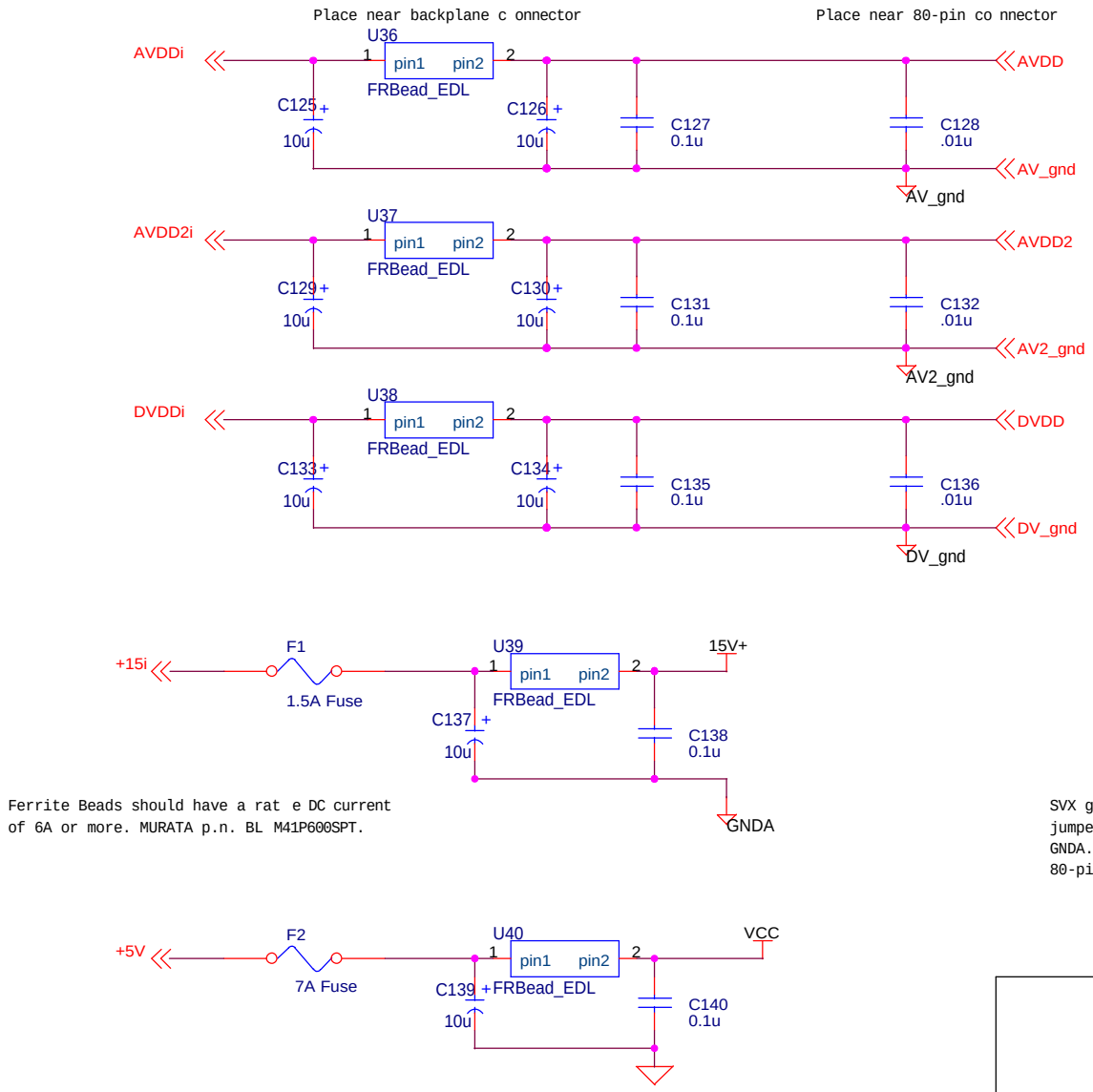

Ferrite Beads should have a rat e DC current of 6A or more. MURATA p.n. BL M41P600SPT.

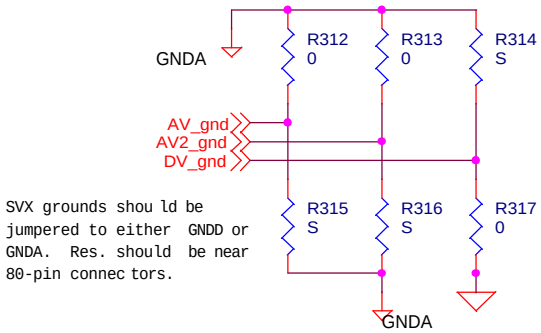

SVX grounds shou ld be jumpered to either GNDD or GNDA. Res. should be near 80-pin connec tors.

Electronics Design Laboratory

Tim J. Sobering
124 Burt Hall
Kansas State University
Manhattan, KS 66506-0400

Title: Power Supply Decoupling

Size	Document Number:	REV
A	HEP008-M012	3

Date: 8/6/1999 Page 12 of 26

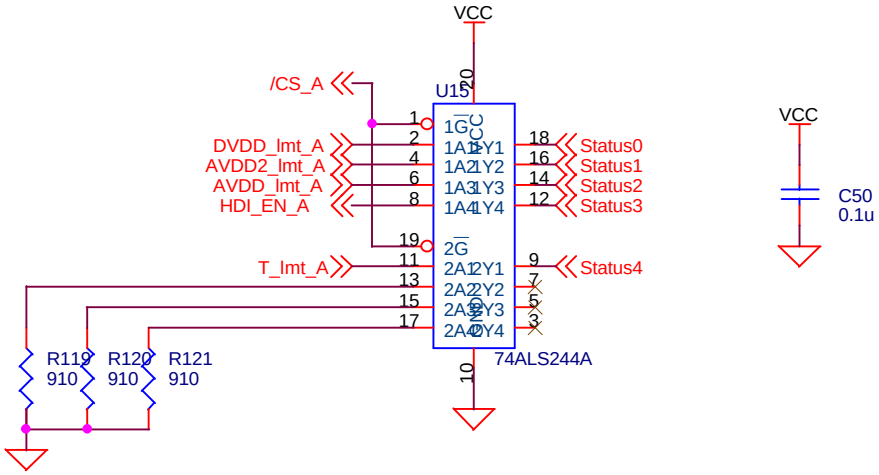

Title	Status Bit Channel Selection	
Size A	Document Number <Doc>	Rev 4
Date: Tuesday, October 05, 1999	Sheet 67 of 97	

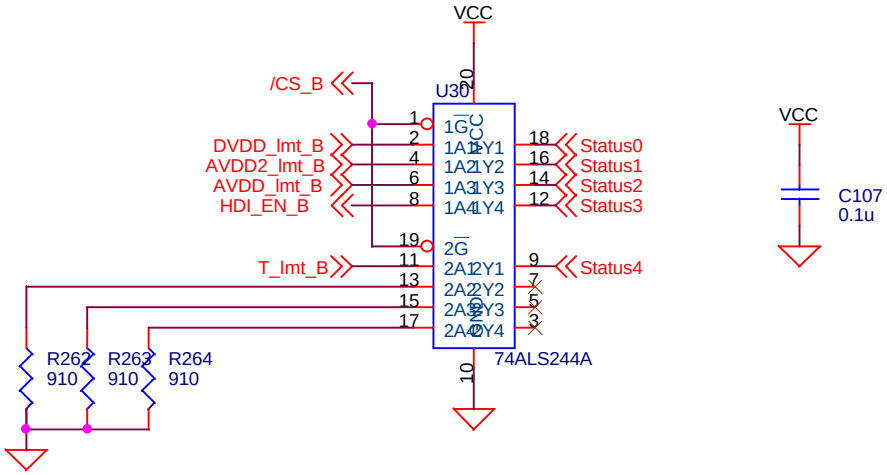

Title	Status Bit Channel Selection	
Size A	Document Number <Doc>	Rev 4
Date: Tuesday, October 05, 1999	Sheet 68 of 97	

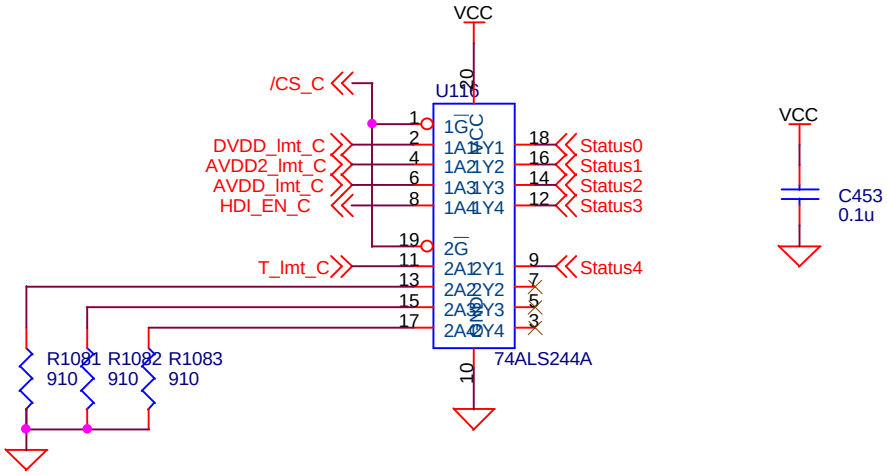

Title	Status Bit Channel Selection	
Size A	Document Number <Doc>	Rev 4
Date: Tuesday, October 05, 1999	Sheet 69 of 97	

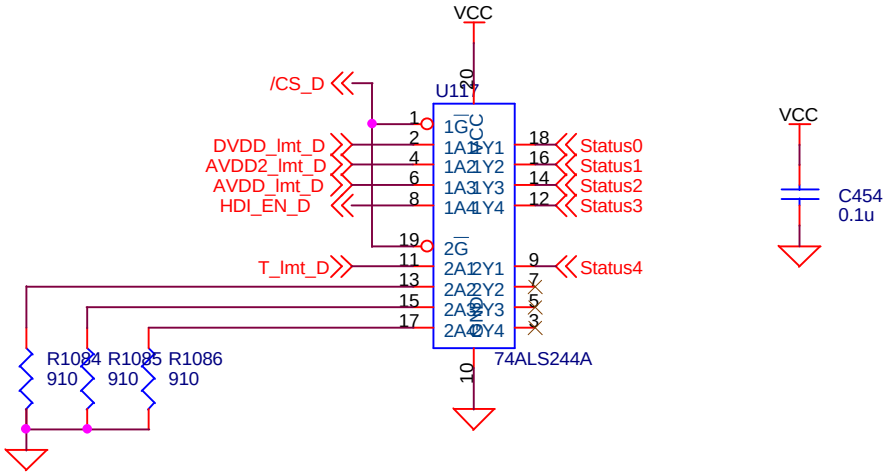

Title	Status Bit Channel Selection	
Size A	Document Number <Doc>	Rev 4
Date: Tuesday, October 05, 1999	Sheet 70 of 97	

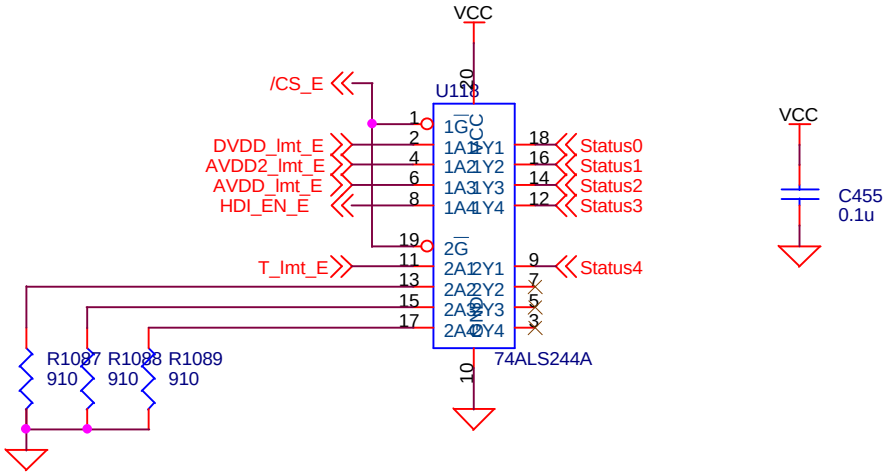

Title	Status Bit Channel Selection	
Size A	Document Number <Doc>	Rev 4
Date: Tuesday, October 05, 1999	Sheet 71 of 97	

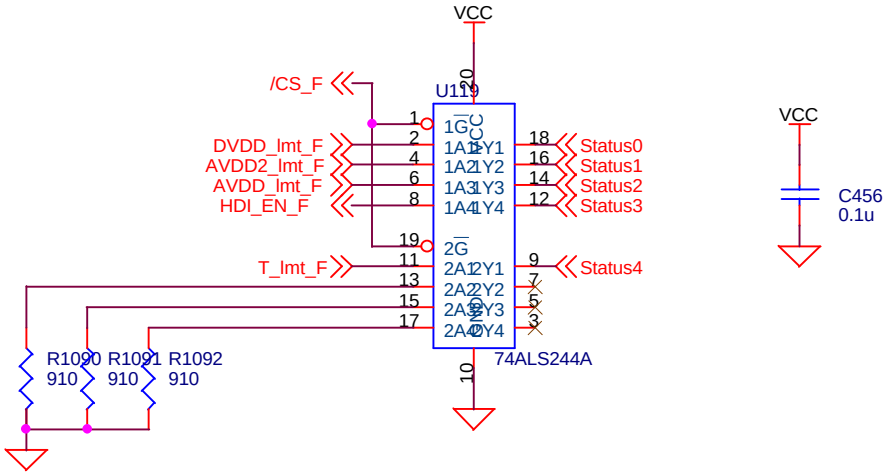

Title	Status Bit Channel Selection	
Size A	Document Number <Doc>	Rev 4
Date: Tuesday, October 05, 1999	Sheet 72 of 97	

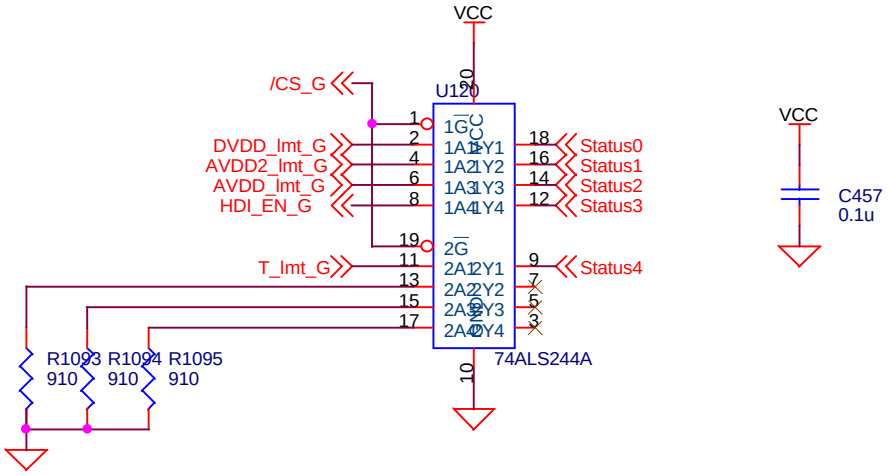

Title	Status Bit Channel Selection	
Size A	Document Number <Doc>	Rev 4
Date: Tuesday, October 05, 1999	Sheet 73 of 97	

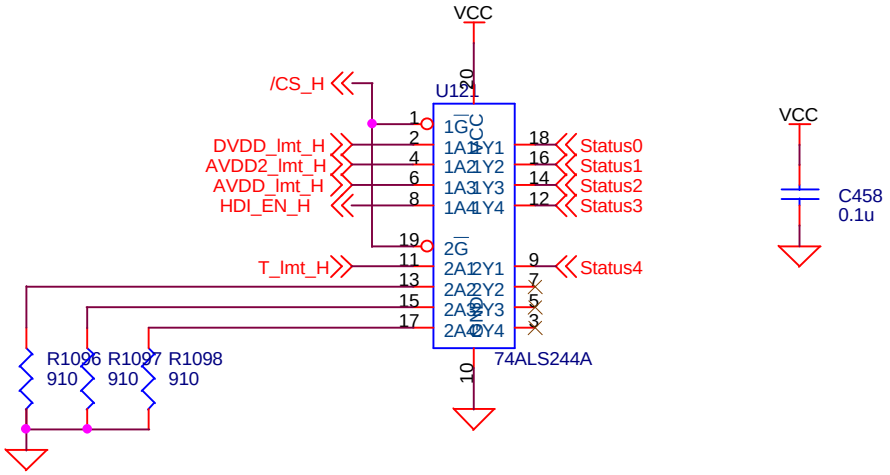

Title	Status Bit Channel Selection	
Size A	Document Number <Doc>	Rev 4
Date: Tuesday, October 05, 1999	Sheet 74 of 97	

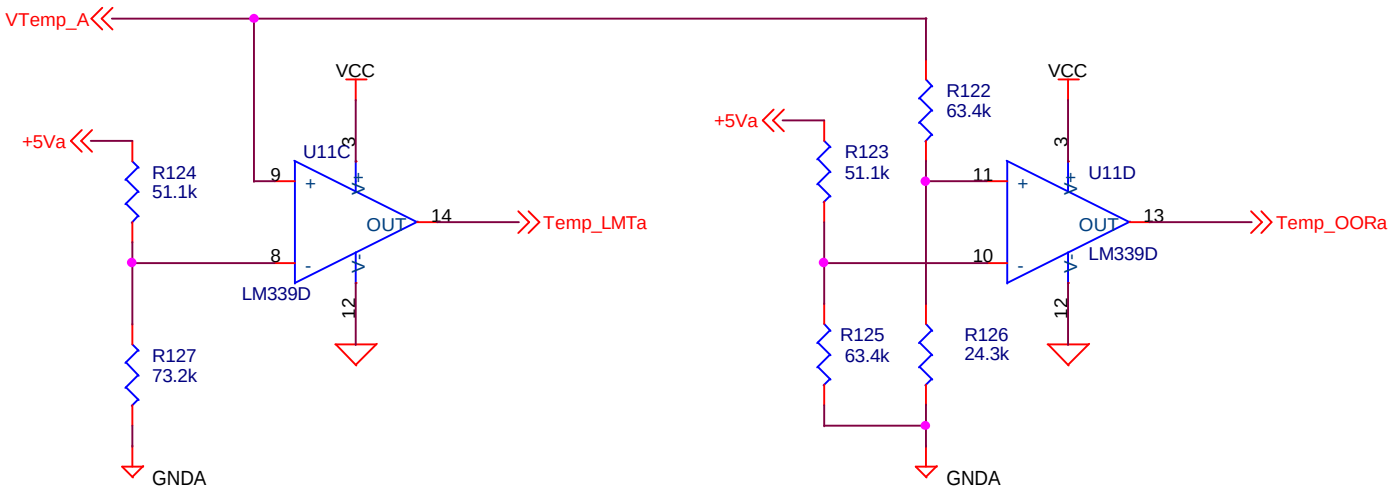

Title	Tempatrue Level Indicator	
Size A	Document Number <Doc>	Rev 3
Date: Tuesday, October 05, 1999	Sheet 75 of 97	

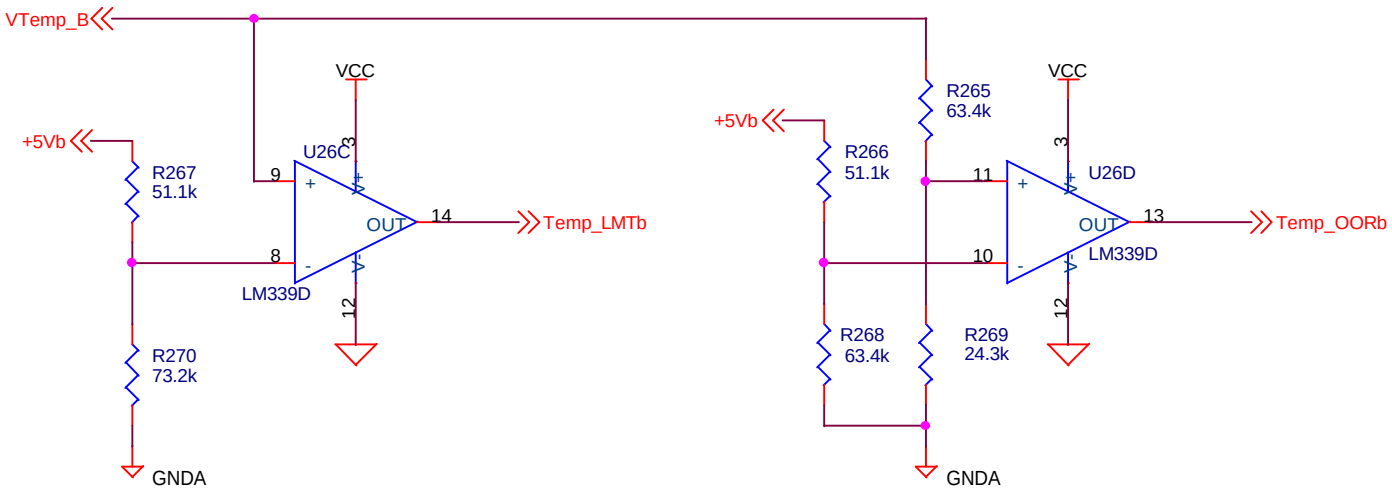

Title	Tempatrue Level Indicator	
Size A	Document Number <Doc>	Rev 3
Date: Tuesday, October 05, 1999	Sheet 76 of 97	

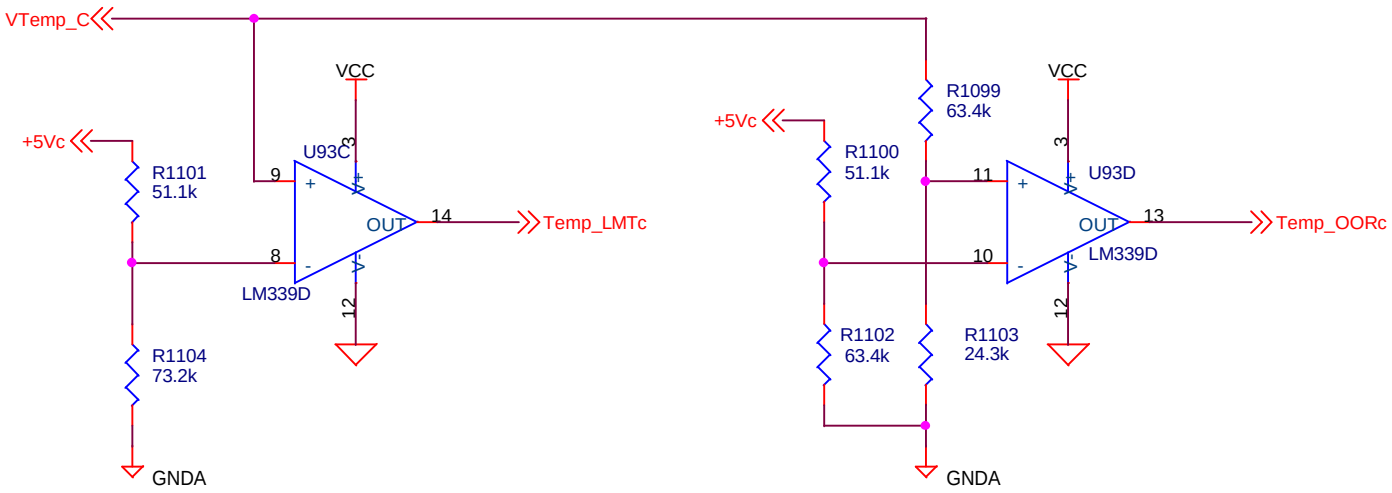

Title	Tempatrue Level Indicator	
Size A	Document Number <Doc>	Rev 3
Date: Tuesday, October 05, 1999	Sheet 77 of 97	

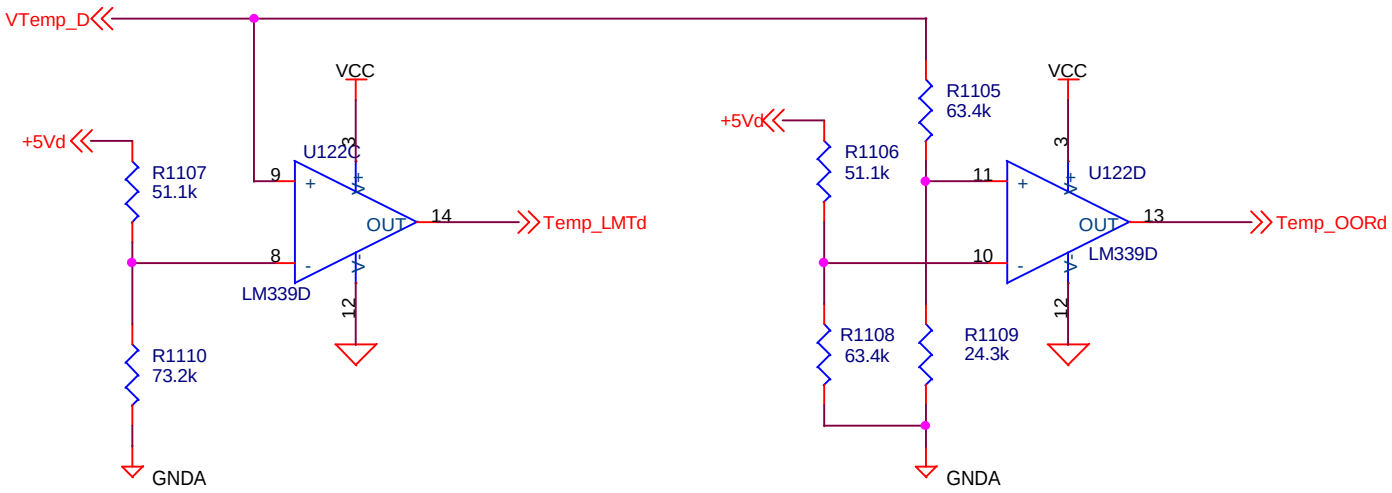

Title	Tempatrue Level Indicator	
Size A	Document Number <Doc>	Rev 3
Date: Tuesday, October 05, 1999	Sheet 78 of 97	

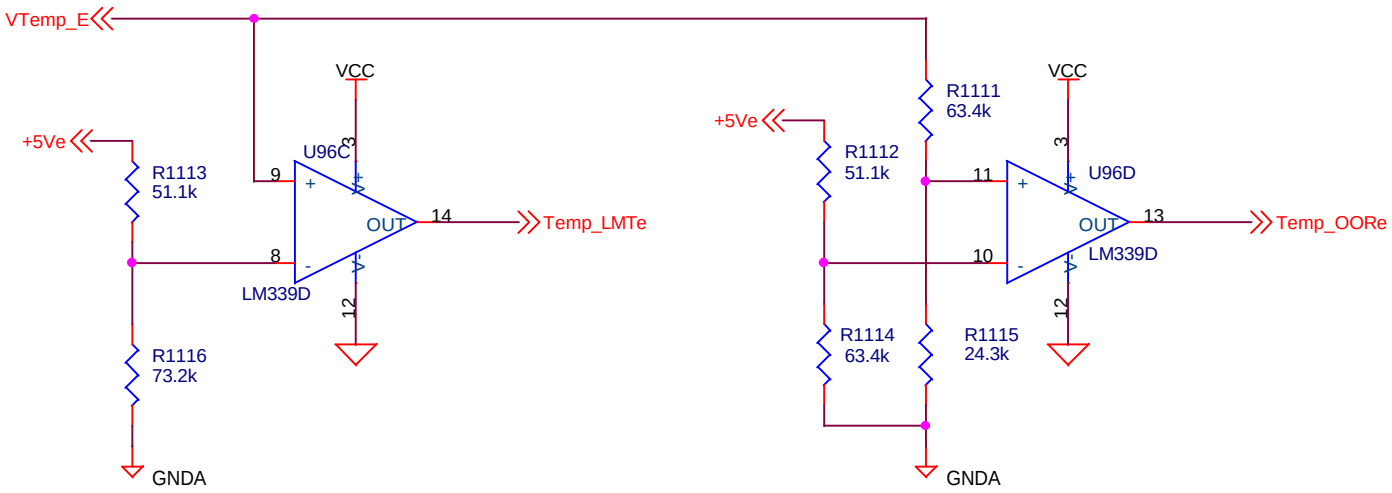

Title	Tempatrue Level Indicator	
Size A	Document Number <Doc>	Rev 3
Date: Tuesday, October 05, 1999	Sheet 79 of 97	

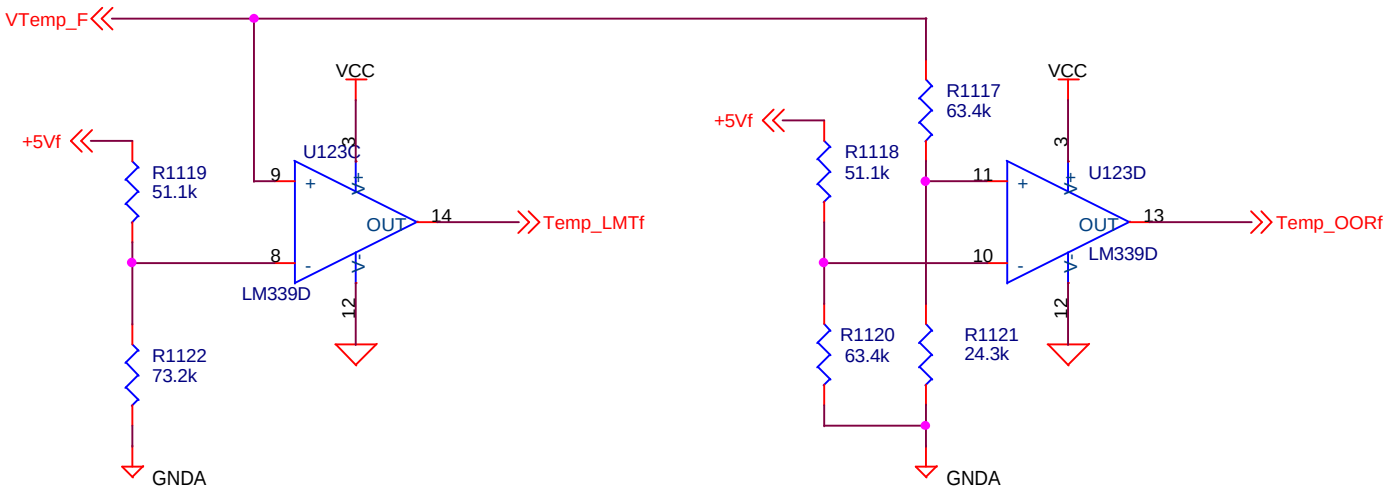

Title	Tempatrue Level Indicator	
Size A	Document Number <Doc>	Rev 3
Date: Tuesday, October 05, 1999	Sheet 80 of 97	

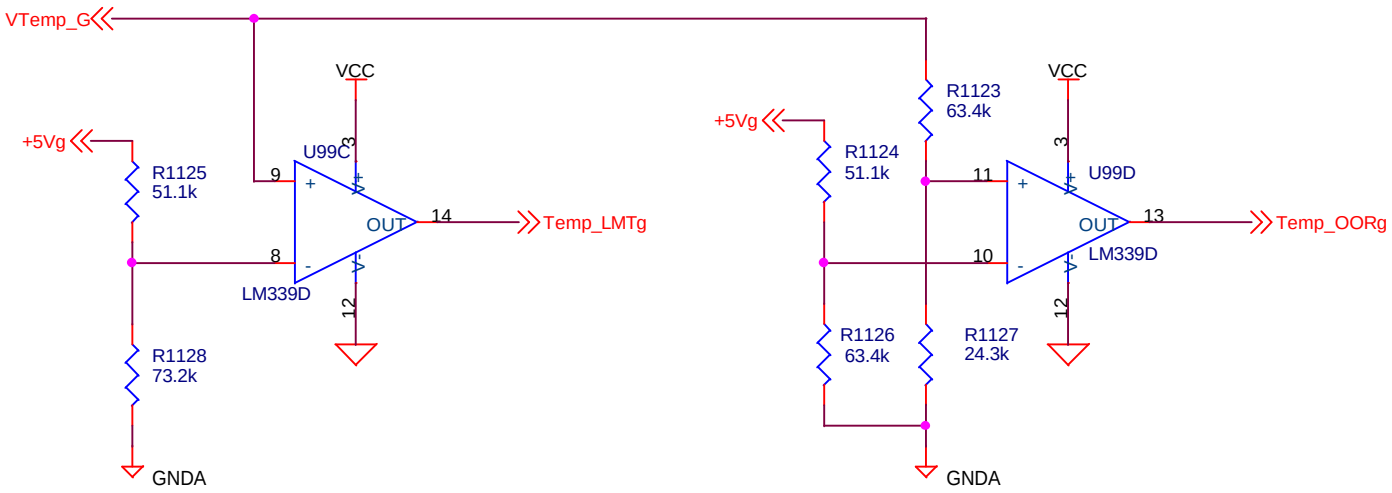

Title	Tempatrue Level Indicator	
Size A	Document Number <Doc>	Rev 3
Date: Tuesday, October 05, 1999	Sheet 81 of 97	

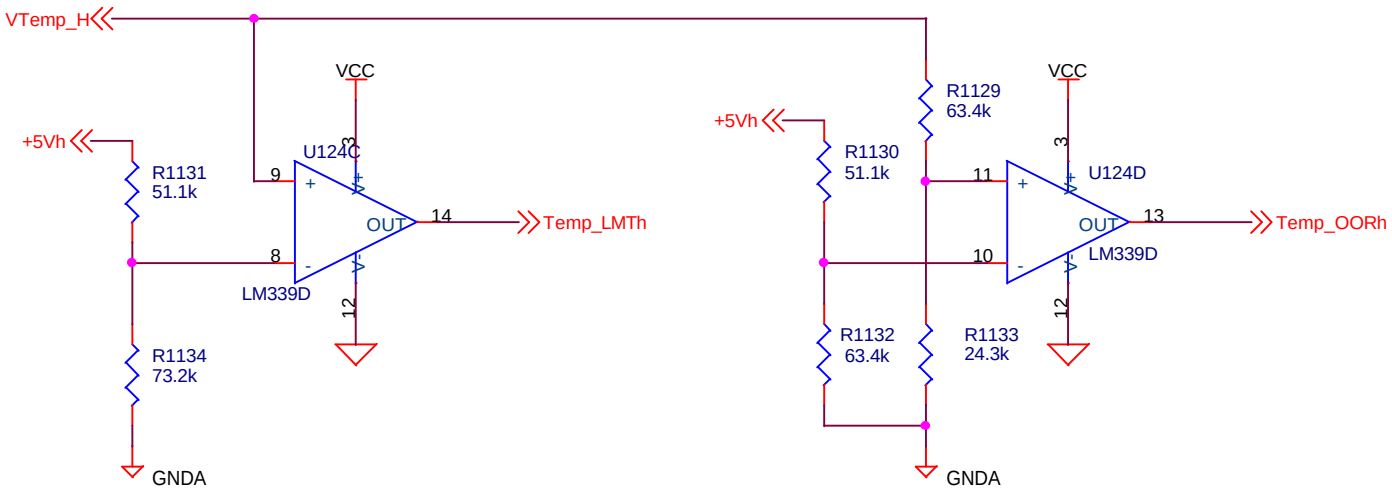

Title	Tempatrue Level Indicator	
Size A	Document Number <Doc>	Rev 3
Date: Tuesday, October 05, 1999	Sheet 82 of 97	

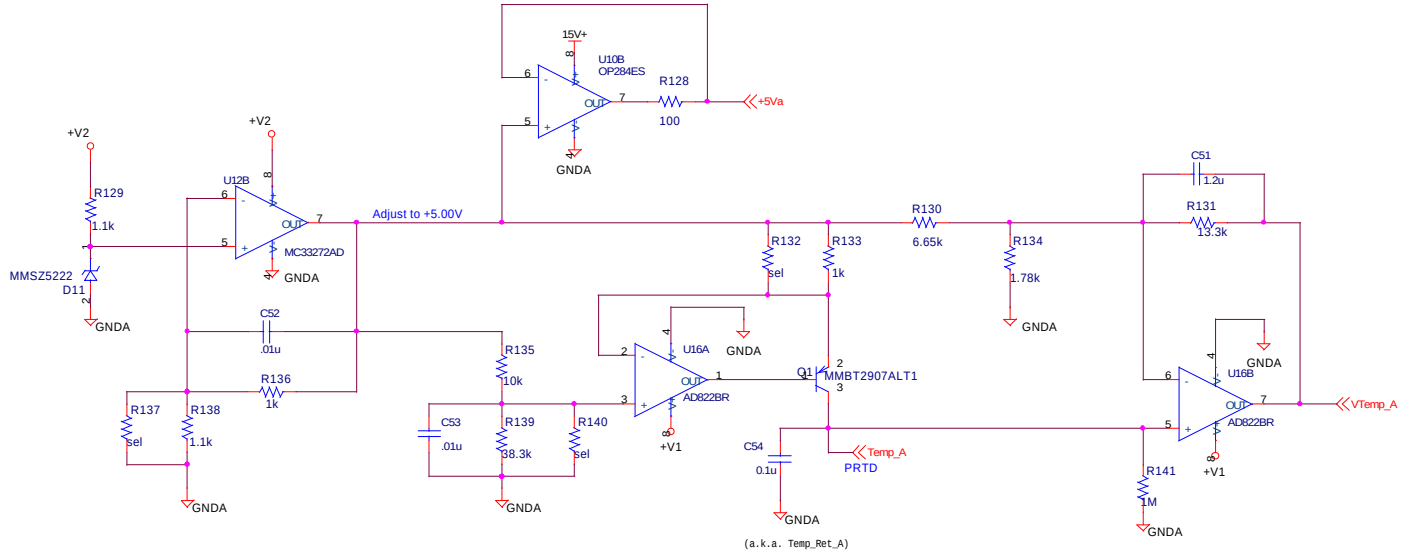

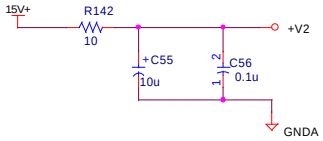

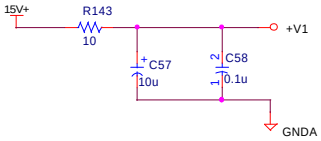

Notes:

1. Pick a FET in place of Q2 for lower error.
2. Ideal value for R31||R32 is 5.234k
3. Ideal value for R33||R34 is 1.192k
4. Check drive on OP-284
5. Size R25
6. Adjust R35 for 1mA max through thermistor

Note:
Temperature sensor is Pt RTD 1kOhm@0deg C.
3.85 deltaOhm / deg C.
Supply should be constant 1mA.

TEMP is one side of the PRTD, the raw temperature voltage
~1v +/-3.85mV/(deg.C).

TEMP_RET is the current-return side.

Electronics Design Laboratory

Tim J. Sobering
124 Burt Hall
Kansas State University
Manhattan, KS 66506-0400

Title: Temperature Monitoring

Size	Document Number:	REV
B	HEP008-M004	0.4

Date: 8/6/99 Page 4 of 26

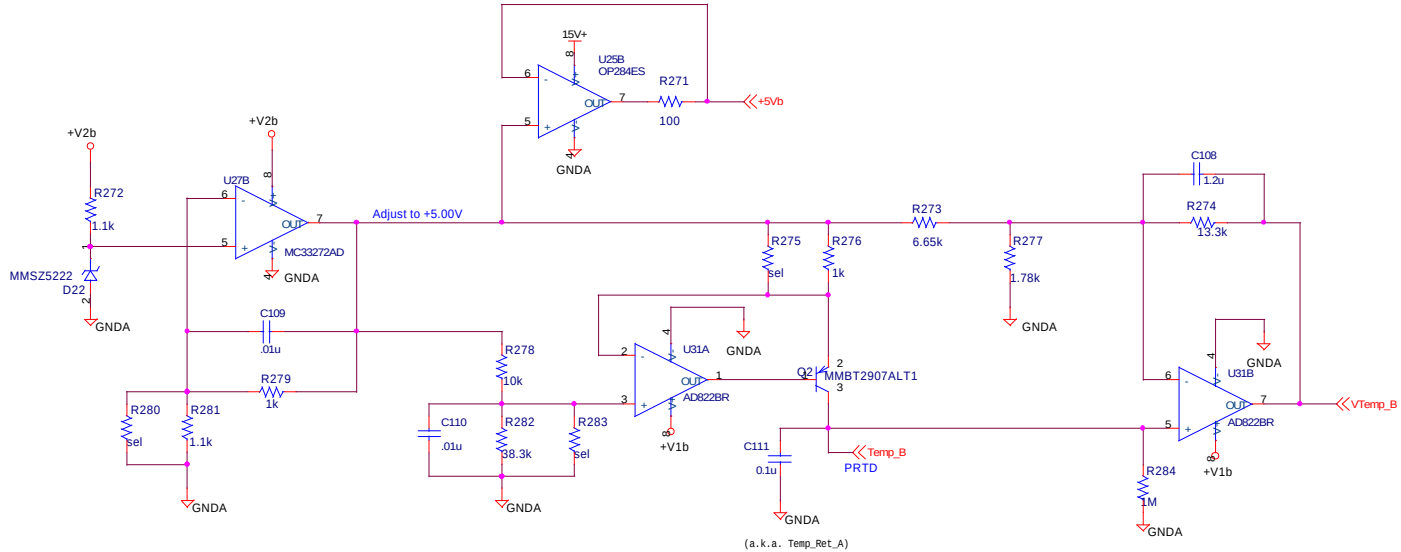

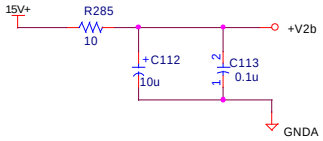

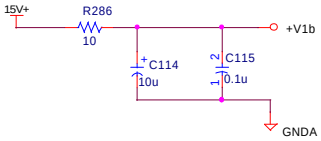

Notes:

1. Pick a FET in place of Q2 for lower error.
2. Ideal value for R31||R32 is 5.234k
3. Ideal value for R33||R34 is 1.192k
4. Check drive on OP-284
5. Size R25
6. Adjust R35 for 1mA max through thermistor

Note:
Temperature sensor is Pt RTD 1kOhm@0deg C.
3.85 deltaOhm / deg C.
Supply should be constant 1mA.

TEMP is one side of the PRTD, the raw temperature voltage
~1v +/-3.85mV/(deg.C).

TEMP_RET is the current-return side.

Electronics Design Laboratory

Tim J. Sobering
124 Burt Hall
Kansas State University
Manhattan, KS 66506-0400

Title: Temperature Monitoring

Size	Document Number:	REV
B	HEP008-M004	0.4

Date: 8/6/99 Page 4 of 26

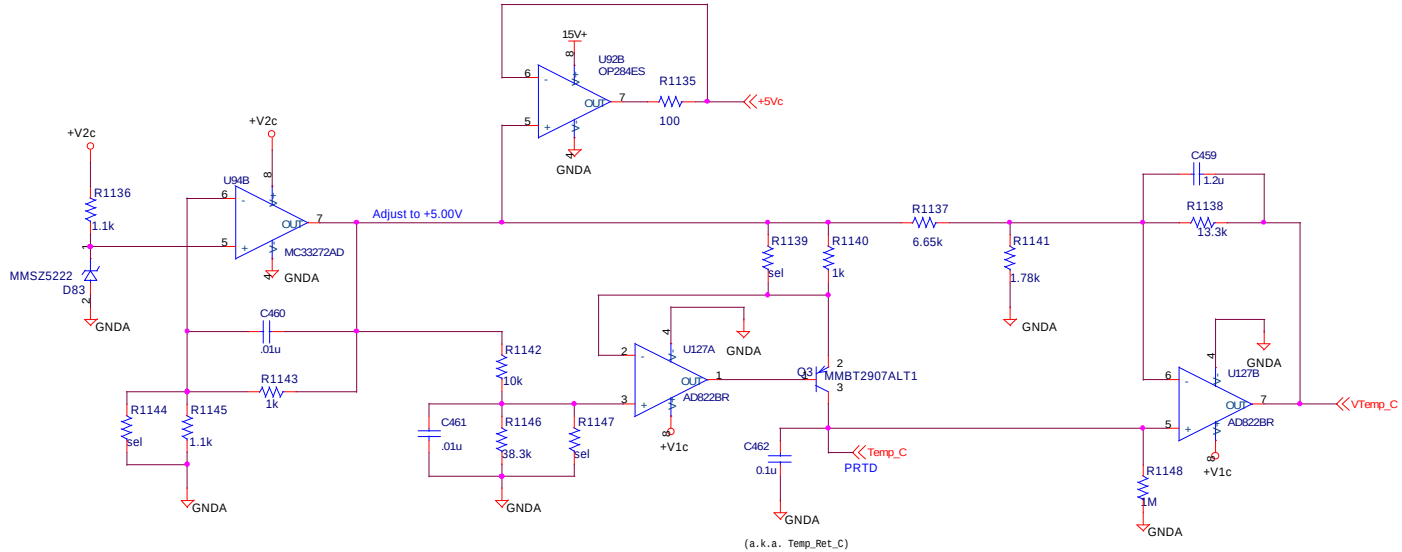

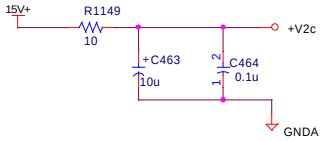

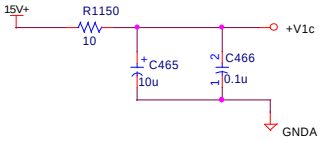

Notes:

1. Pick a FET in place of Q2 for lower error.
2. Ideal value for R31||R32 is 5.234k
3. Ideal value for R33||R34 is 1.192k
4. Check drive on OP-284
5. Size R25
6. Adjust R35 for 1mA max through thermistor

Note:
Temperature sensor is Pt RTD 1kOhm@0deg C.
3.85 deltaOhm / deg C.
Supply should be constant 1mA.

TEMP is one side of the PRTD, the raw temperature voltage
~1v +/-3.85mV/(deg.C).

TEMP_RET is the current-return side.

Electronics Design Laboratory

Tim J. Sobering
124 Burt Hall
Kansas State University
Manhattan, KS 66506-0400

Title: Temperature Monitoring

Size	Document Number:	REV
B	HEP008-M004	0.4

Date: 8/6/99 Page 4 of 26

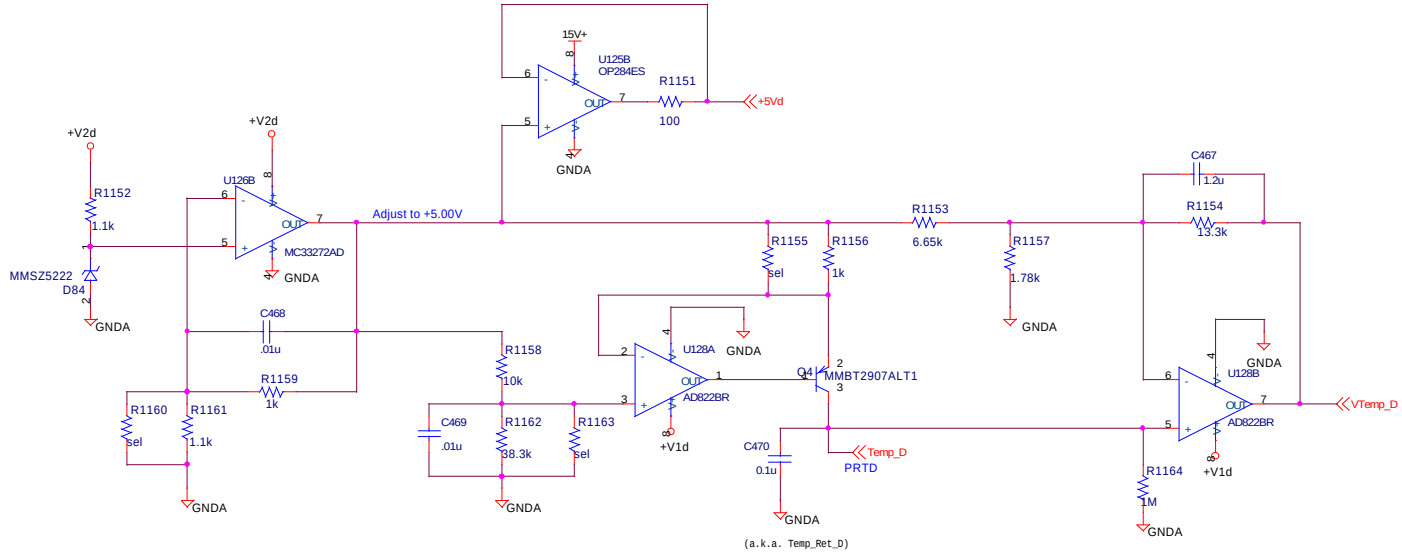

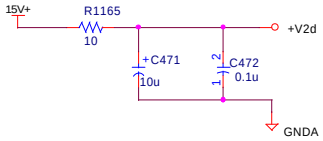

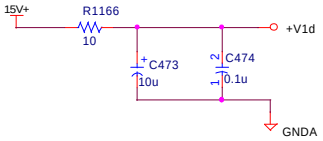

Notes:

1. Pick a FET in place of Q2 for lower error.
2. Ideal value for R31||R32 is 5.234k
3. Ideal value for R33||R34 is 1.192k
4. Check drive on OP-284
5. Size R25
6. Adjust R35 for 1mA max through thermistor

Note:
Temperature sensor is Pt RTD 1kOhm@0deg C.
3.85 deltaOhm / deg C.
Supply should be constant 1mA.

TEMP is one side of the PRTD, the raw temperature voltage
~1v +/-3.85mV/(deg.C).

TEMP_RET is the current-return side.

Electronics Design Laboratory

Tim J. Sobering
124 Burt Hall
Kansas State University
Manhattan, KS 66506-0400

Title: Temperature Monitoring

Size	Document Number:	REV
B	HEP008-M004	0.4

Date: 8/6/99 Page 4 of 26

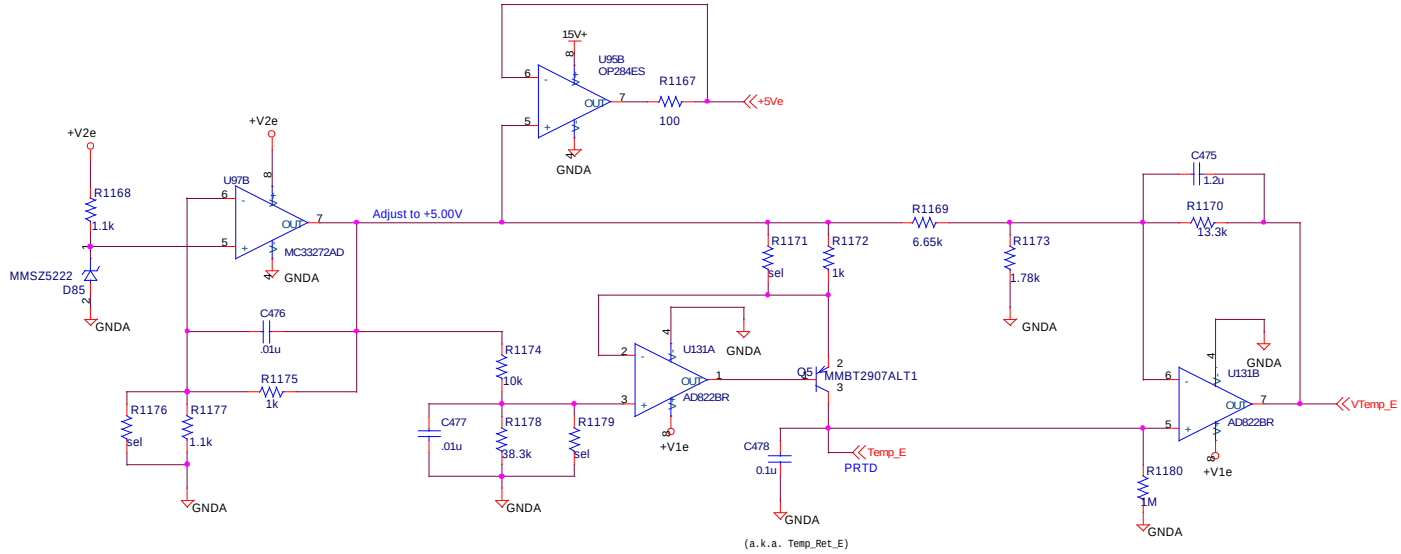

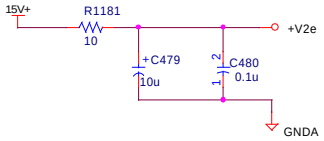

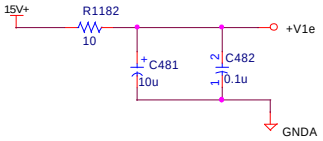

Notes:

1. Pick a FET in place of Q2 for lower error.
2. Ideal value for R31||R32 is 5.234k
3. Ideal value for R33||R34 is 1.192k
4. Check drive on OP-284
5. Size R25
6. Adjust R35 for 1mA max through thermistor

Note:
Temperature sensor is Pt RTD 1kOhm@0deg C.
3.85 deltaOhm / deg C.
Supply should be constant 1mA.

TEMP is one side of the PRTD, the raw temperature voltage
~1v +/-3.85mV/(deg.C).

TEMP_RET is the current-return side.

Electronics Design Laboratory

Tim J. Sobering
124 Burt Hall
Kansas State University
Manhattan, KS 66506-0400

Title: Temperature Monitoring

Size	Document Number:	REV
B	HEP008-M004	0.4

Date: 8/6/99 Page 4 of 26

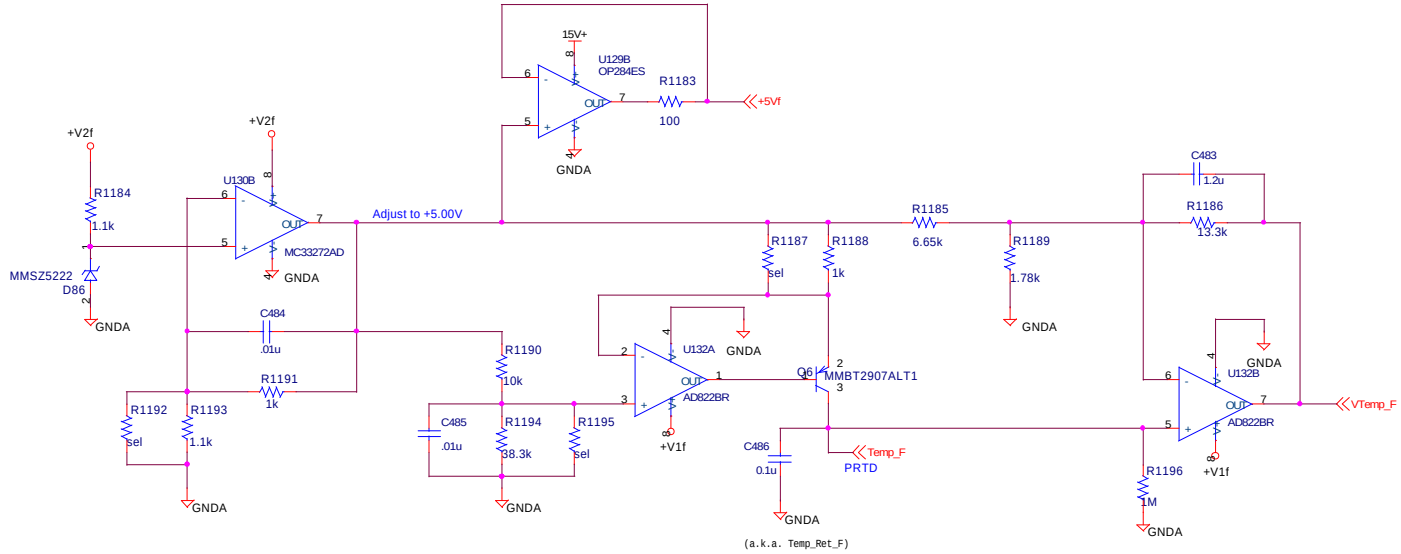

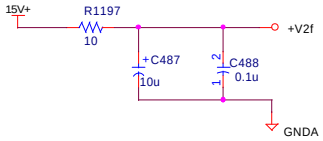

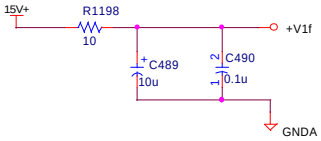

Notes:

1. Pick a FET in place of Q2 for lower error.
2. Ideal value for R31||R32 is 5.234k
3. Ideal value for R33||R34 is 1.192k
4. Check drive on OP-284
5. Size R25
6. Adjust R35 for 1mA max through thermistor

Note:
Temperature sensor is Pt RTD 1kOhm@0deg C.
3.85 deltaOhm / deg C.
Supply should be constant 1mA.

TEMP is one side of the PRTD, the raw temperature voltage
~1v +/-3.85mV/(deg.C).

TEMP_RET is the current-return side.

Electronics Design Laboratory

Tim J. Sobering
124 Burt Hall
Kansas State University
Manhattan, KS 66506-0400

Title: Temperature Monitoring

Size	Document Number:	REV
B	HEP008-M004	0.4

Date: 8/6/99 Page 4 of 26

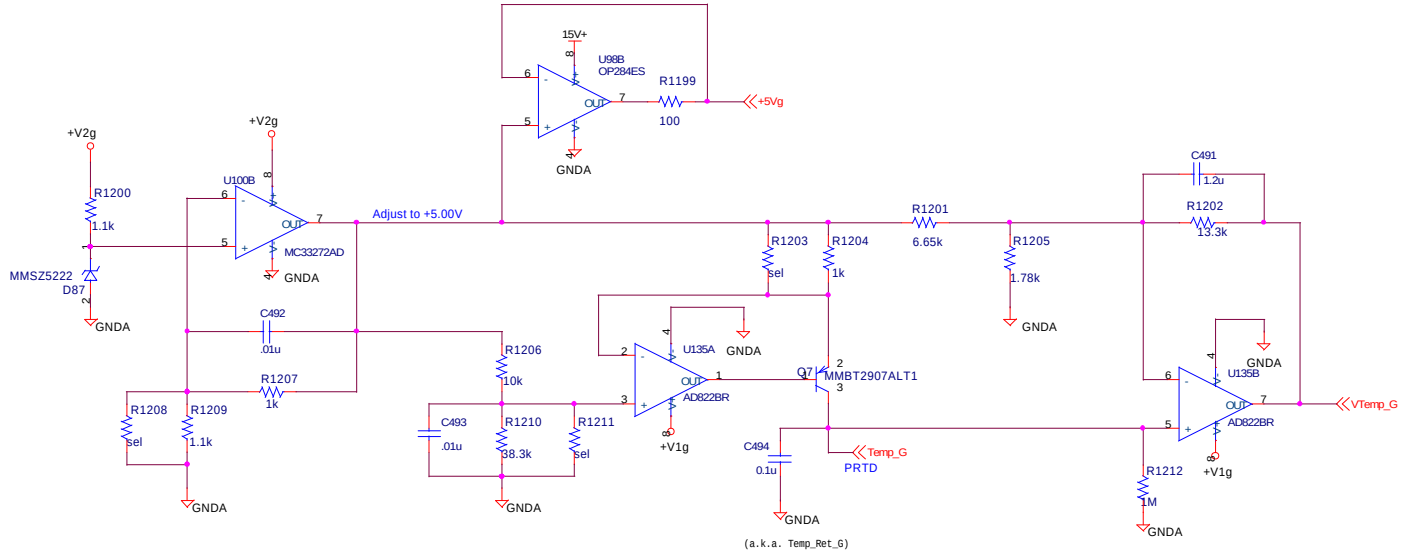

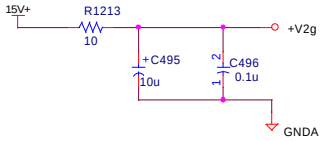

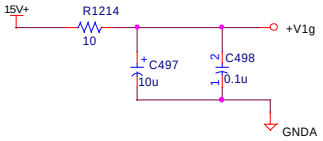

Notes:

1. Pick a FET in place of Q2 for lower error.
2. Ideal value for R31||R32 is 5.234k
3. Ideal value for R33||R34 is 1.192k
4. Check drive on OP-284
5. Size R25
6. Adjust R35 for 1mA max through thermistor

Note:
Temperature sensor is Pt RTD 1kOhm@0deg C.
3.85 deltaOhm / deg C.
Supply should be constant 1mA.

TEMP is one side of the PRTD, the raw temperature voltage
~1v +/-3.85mV/(deg.C).

TEMP_RET is the current-return side.

Electronics Design Laboratory

Tim J. Sobering
124 Burt Hall
Kansas State University
Manhattan, KS 66506-0400

Title: Temperature Monitoring

Size	Document Number:	REV
B	HEP008-M004	0.4

Date: 8/6/99 Page 4 of 26

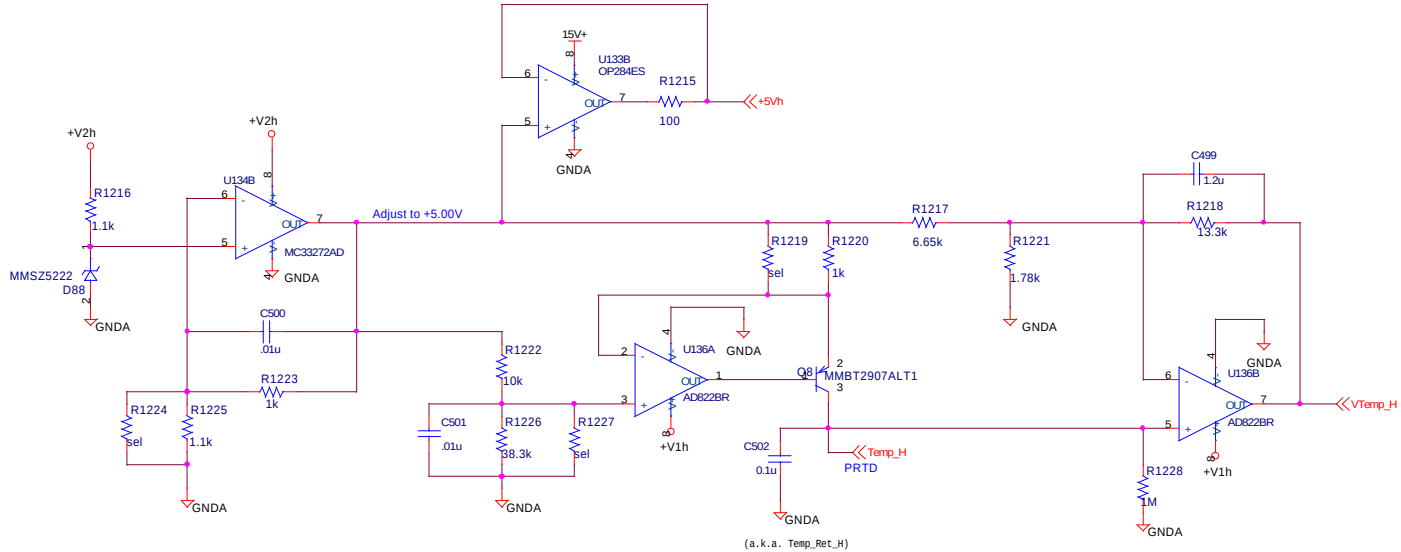

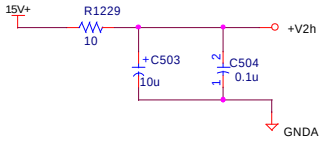

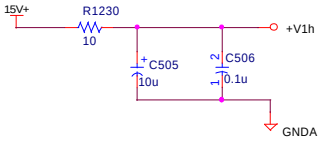

Notes:

1. Pick a FET in place of Q2 for lower error.
2. Ideal value for R31||R32 is 5.234k
3. Ideal value for R33||R34 is 1.192k
4. Check drive on OP-284
5. Size R25
6. Adjust R35 for 1mA max through thermistor

Note:
Temperature sensor is Pt RTD 1kOhm@0deg C.
3.85 deltaOhm / deg C.
Supply should be constant 1mA.

TEMP is one side of the PRTD, the raw temperature voltage
~1v +/-3.85mV/(deg.C).

TEMP_RET is the current-return side.

Electronics Design Laboratory

Tim J. Sobering
124 Burt Hall
Kansas State University
Manhattan, KS 66506-0400

Title: Temperature Monitoring

Size	Document Number:	REV
B	HEP008-M004	0.4

Date: 8/6/99 Page 4 of 26

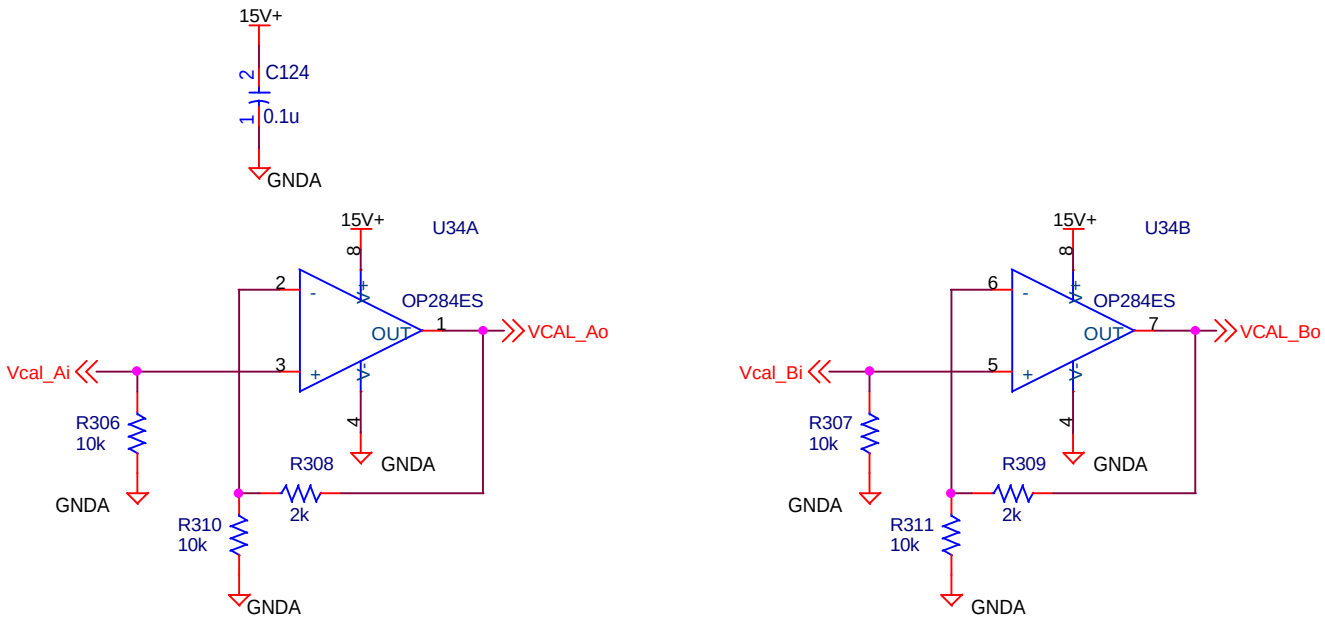

Title	Amplifiers for Vcal signal	
Size A	Document Number <Doc>	Rev 3
Date: Tuesday, October 05, 1999	Sheet 91 of 97	

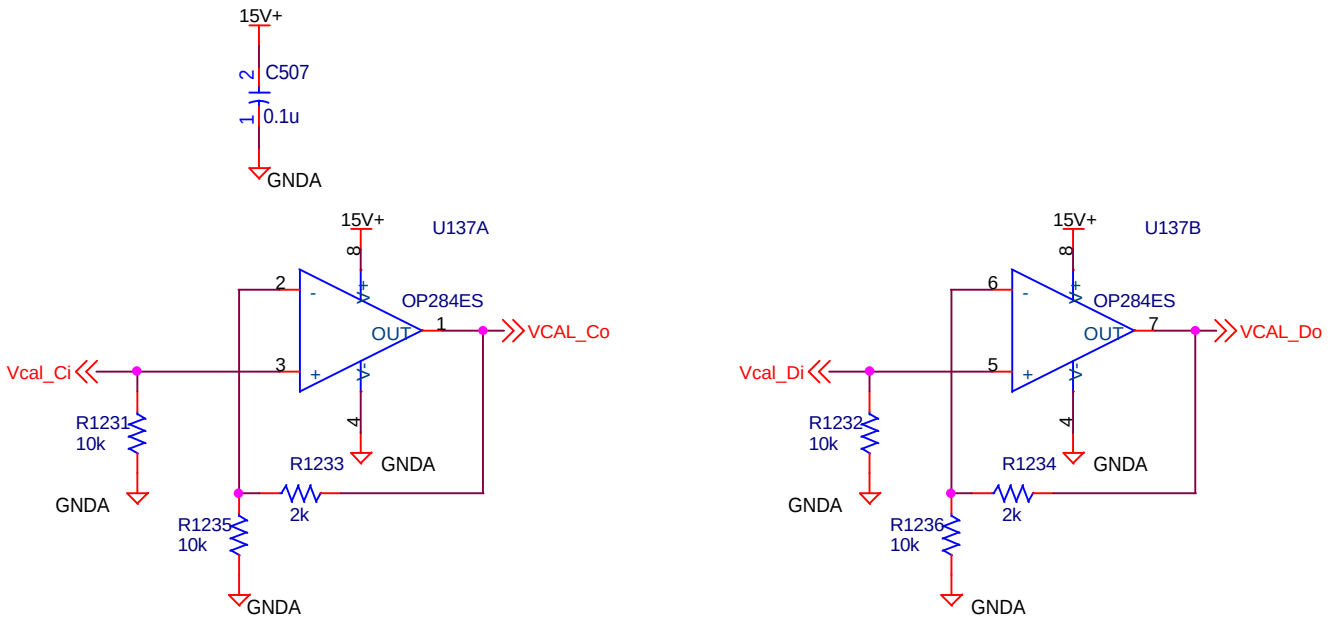

Title	Amplifiers for Vcal signal	
Size A	Document Number <Doc>	Rev 3
Date: Tuesday, October 05, 1999	Sheet 92 of 97	

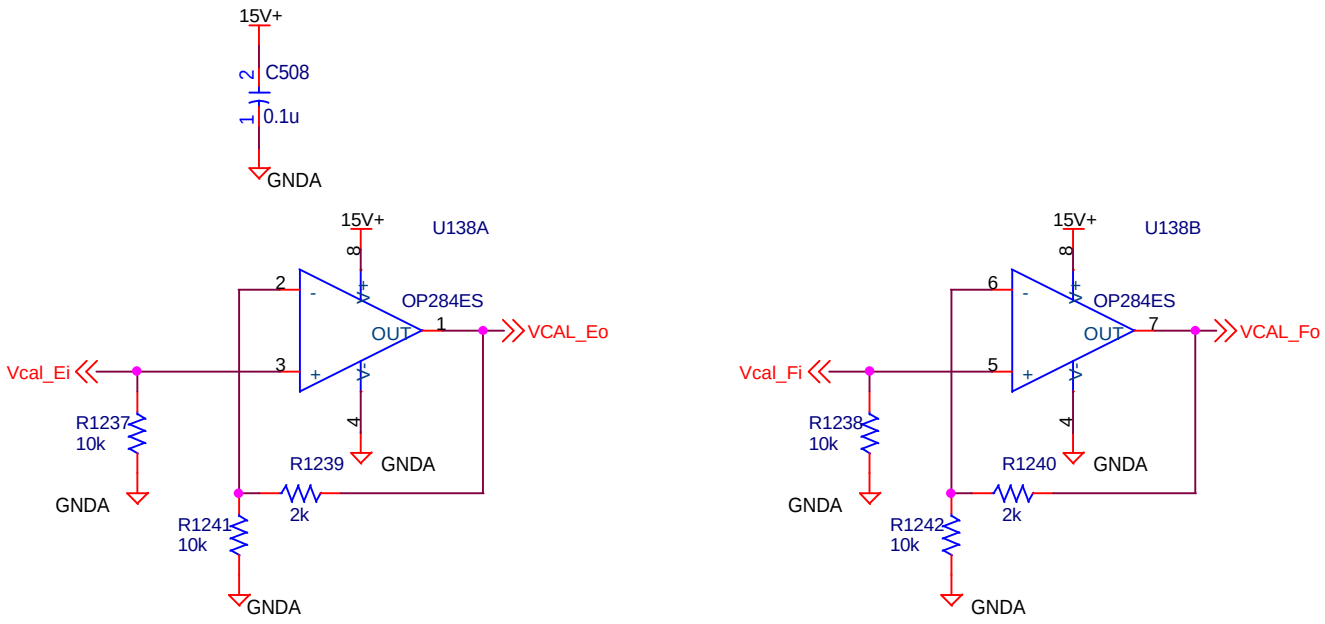

Title	Amplifiers for Vcal signal	
Size A	Document Number <Doc>	Rev 3
Date: Tuesday, October 05, 1999	Sheet 93 of 97	

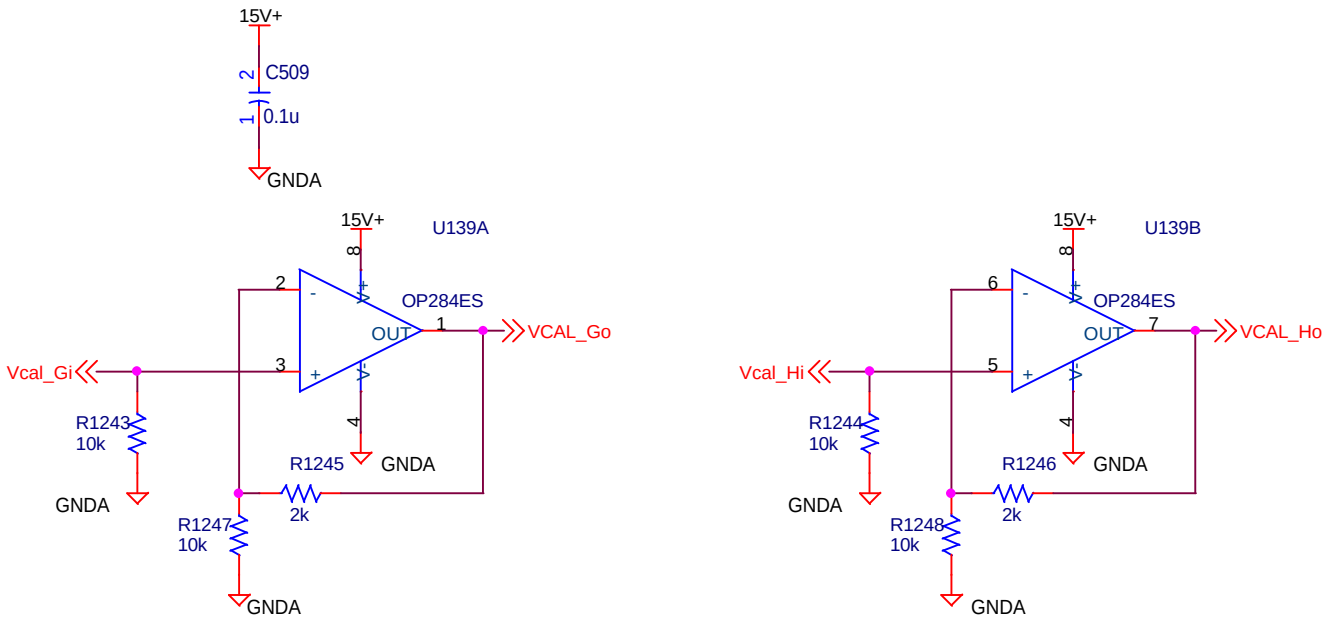

Title	Amplifiers for Vcal signal	
Size A	Document Number <Doc>	Rev 3
Date: Tuesday, October 05, 1999	Sheet 94 of 97	

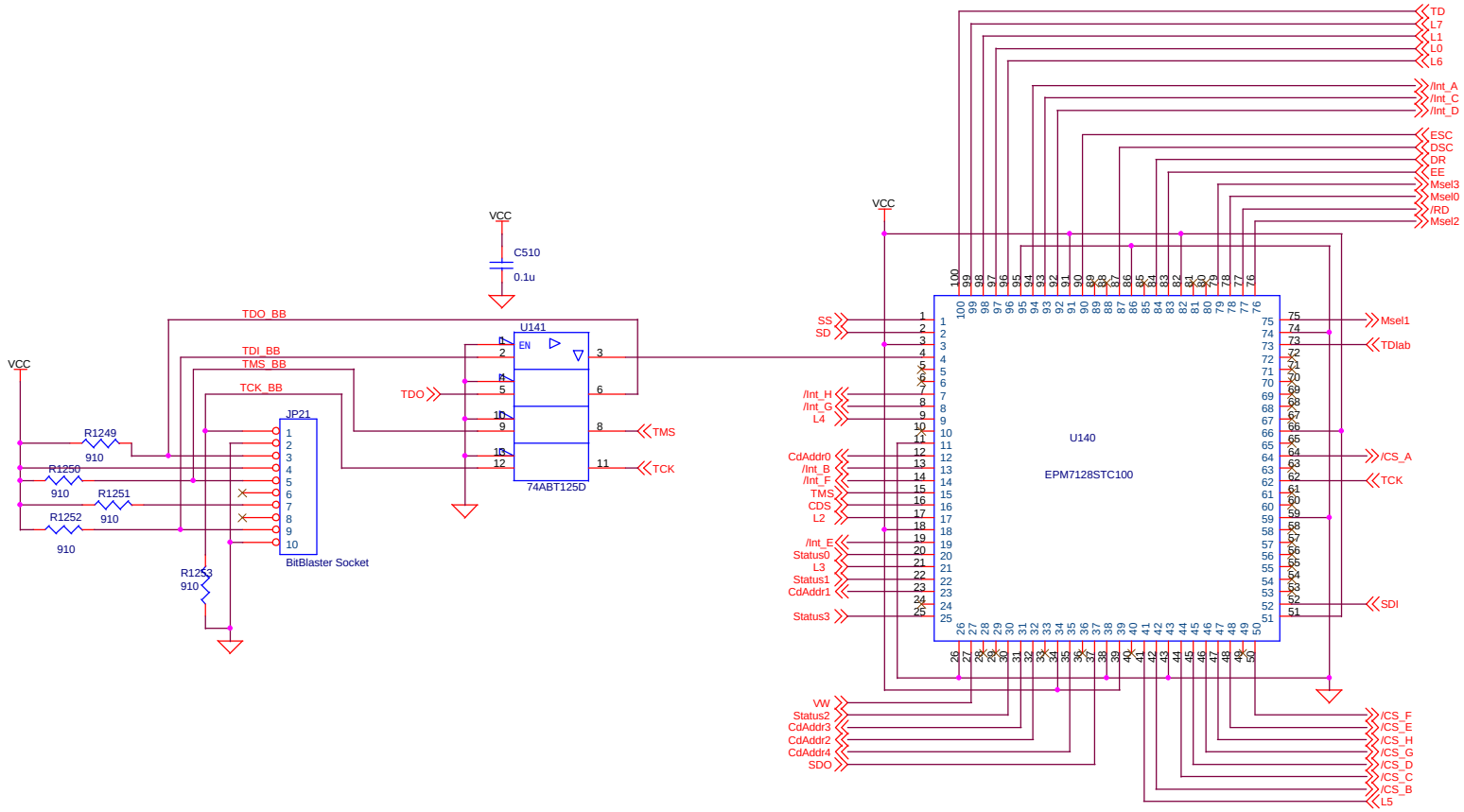

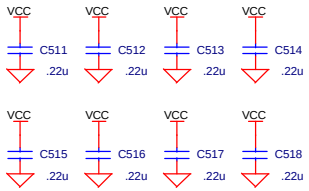

Capacitors should be located near the Vcc pins of the Altera chip (pins 3, 18, 34, 39, 51, 66, 82, and 91).

Title	1553 Altera Chip	
Size B	Document Number <Doc>	Rev 3
Date: Tuesday, October 05, 1999	Sheet 95 of 97	

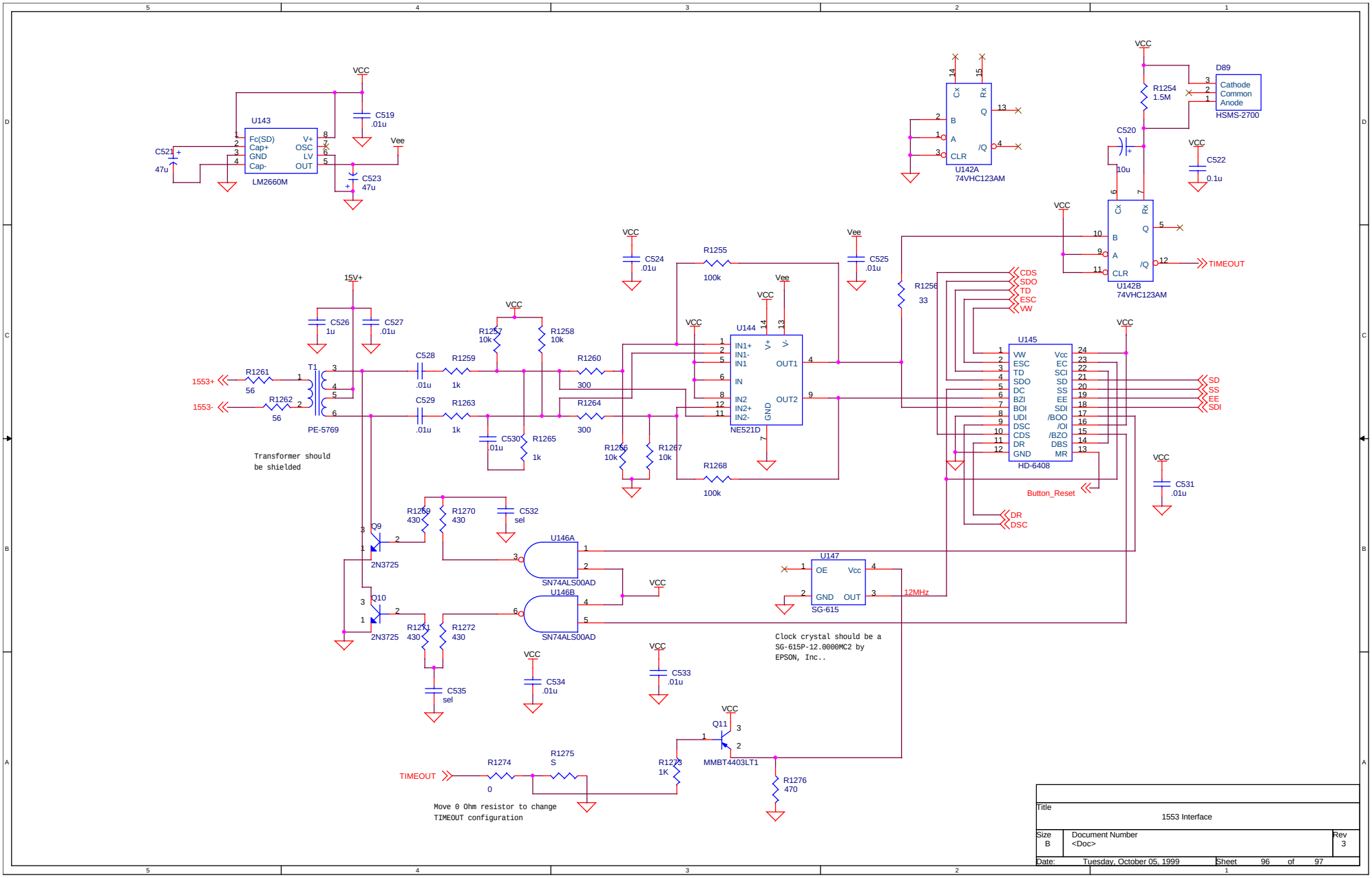

Title	1553 Interface	
Size B	Document Number <Doc>	Rev 3
Date: Tuesday, October 05, 1999	Sheet 96 of 97	

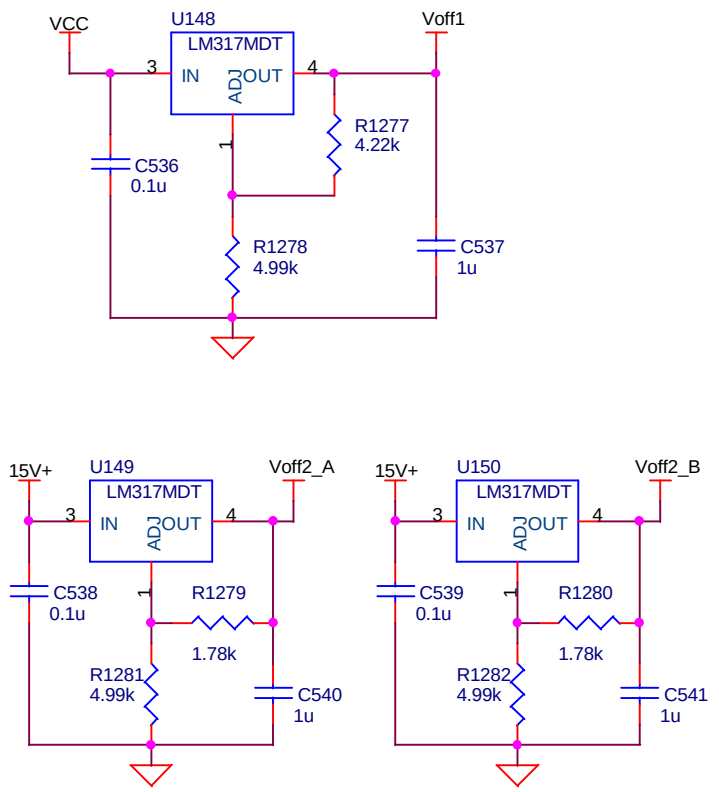

Title	Reference Voltages	
Size A	Document Number <Doc>	Rev 3
Date: Tuesday, October 05, 1999	Sheet 97 of 97	