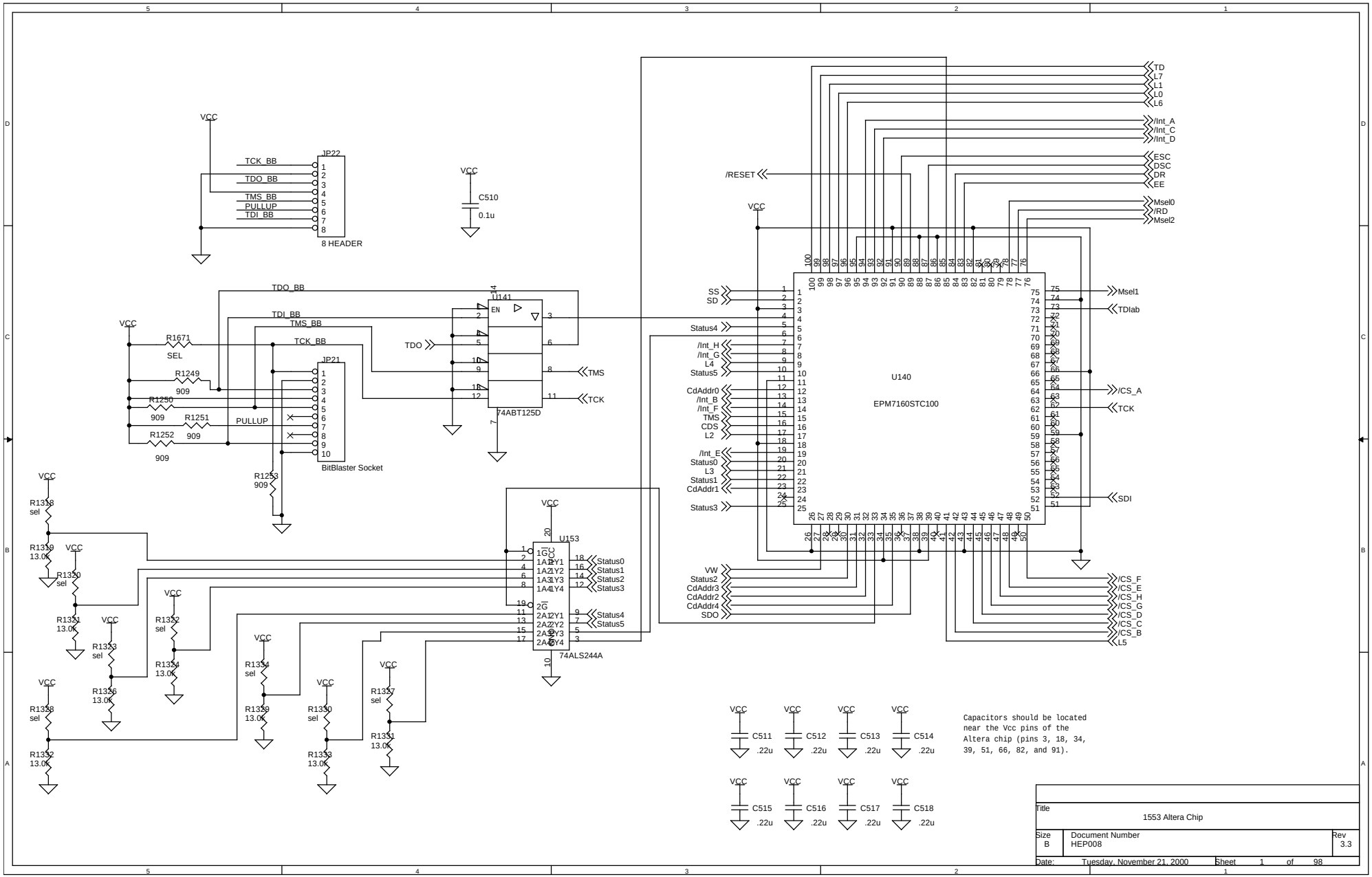

Capacitors should be located near the Vcc pins of the Altera chip (pins 3, 18, 34, 39, 51, 66, 82, and 91).

Title	1553 Altera Chip	
Size B	Document Number HEP008	Rev 3.3
Date: Tuesday, November 21, 2000	Sheet 1 of 98	

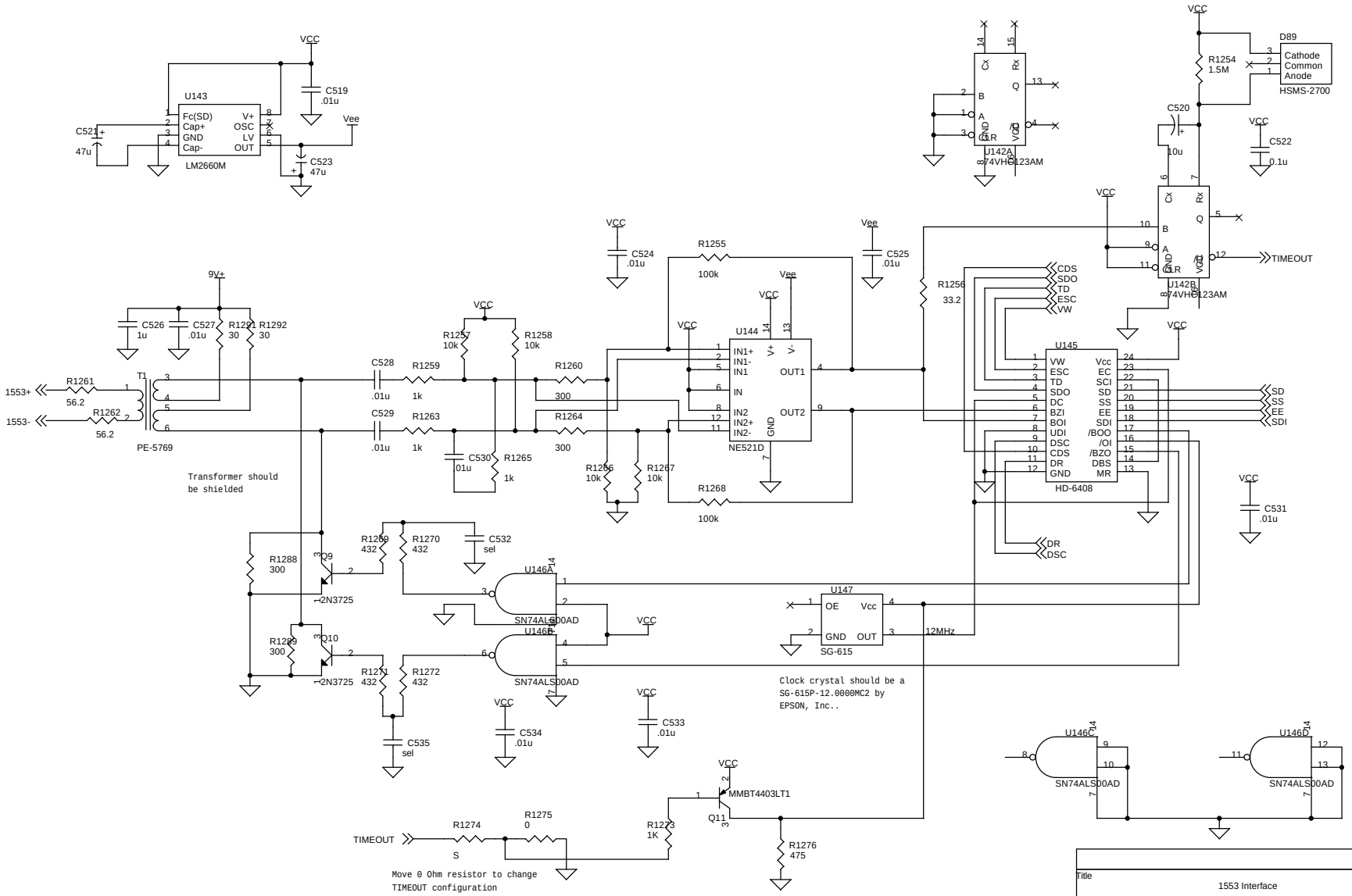

Title	1553 Interface	
Size B	Document Number HEP008	Rev 3.3
Date: Tuesday, November 21, 2000	Sheet 2 of 98	

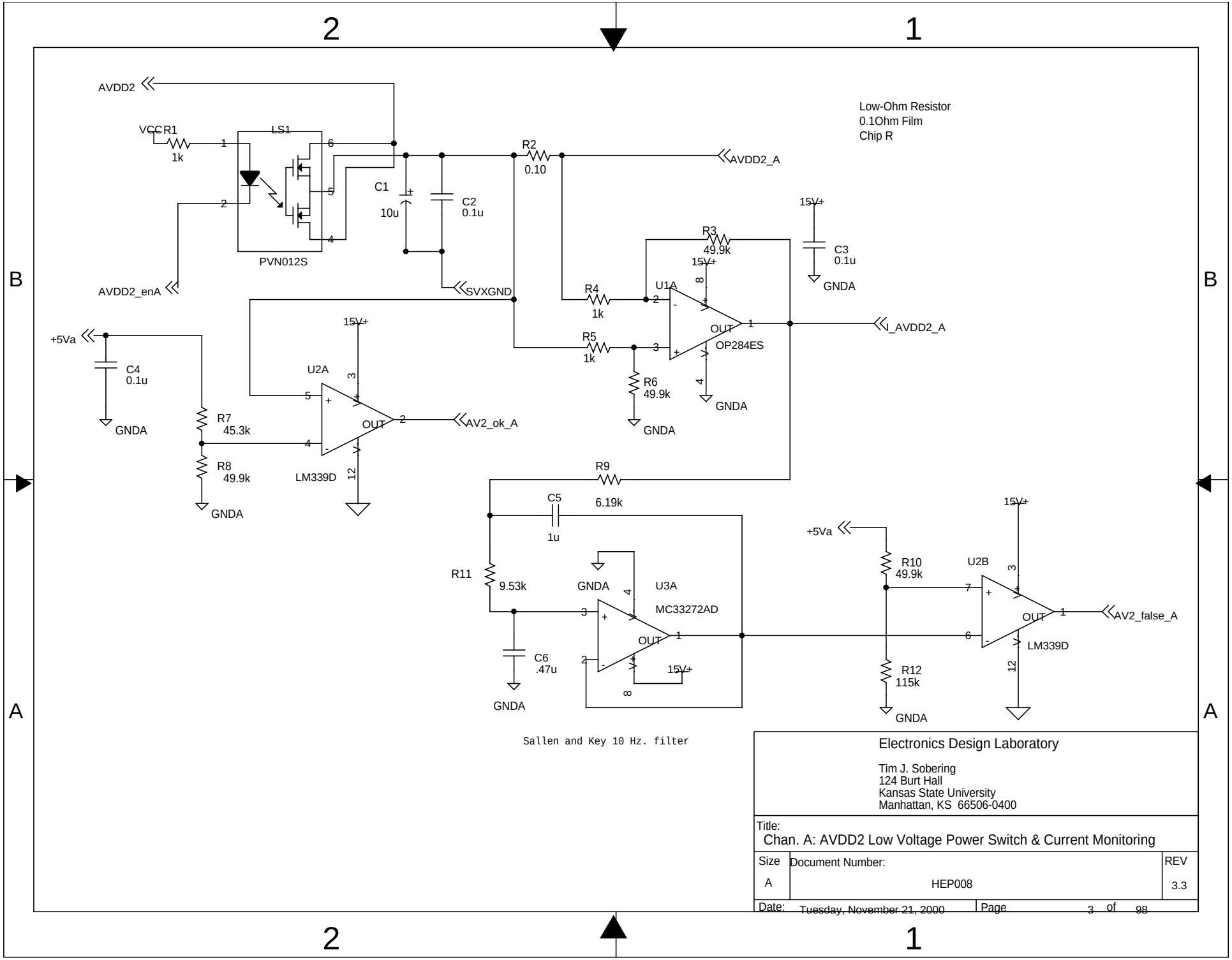
AVDD2
VCC
R1
1k
LS1
PVN012S
C1
10u
C2
0.1u
R2
0.10
AVDD2_A
Low-Ohm Resistor
0.1Ohm Film
Chip R
15V+
C3
0.1u
GNDA
R3
49.9k
U1A
OP284ES
OUT
I_AVDD2_A
R4
1k
R5
1k
R6
49.9k
AVDD2_enA
SVXGND
+5Va
C4
0.1u
R7
45.3k
R8
49.9k
U2A
LM339D
AV2_ok_A
R9
6.19k
C5
1u
R11
9.53k
C6
.47u
U3A
MC33272AD
R10
49.9k
R12
115k
U2B
AV2_false_A
Sallen and Key 10 Hz. filter
Electronics Design Laboratory
Tim J. Sobering
124 Burt Hall
Kansas State University
Manhattan, KS 66506-0400
Title:
Chan. A: AVDD2 Low Voltage Power Switch & Current Monitoring
Size
A
Document Number:
HEP008
REV
3.3
Date:
Tuesday, November 21, 2000
Page
3
of
98

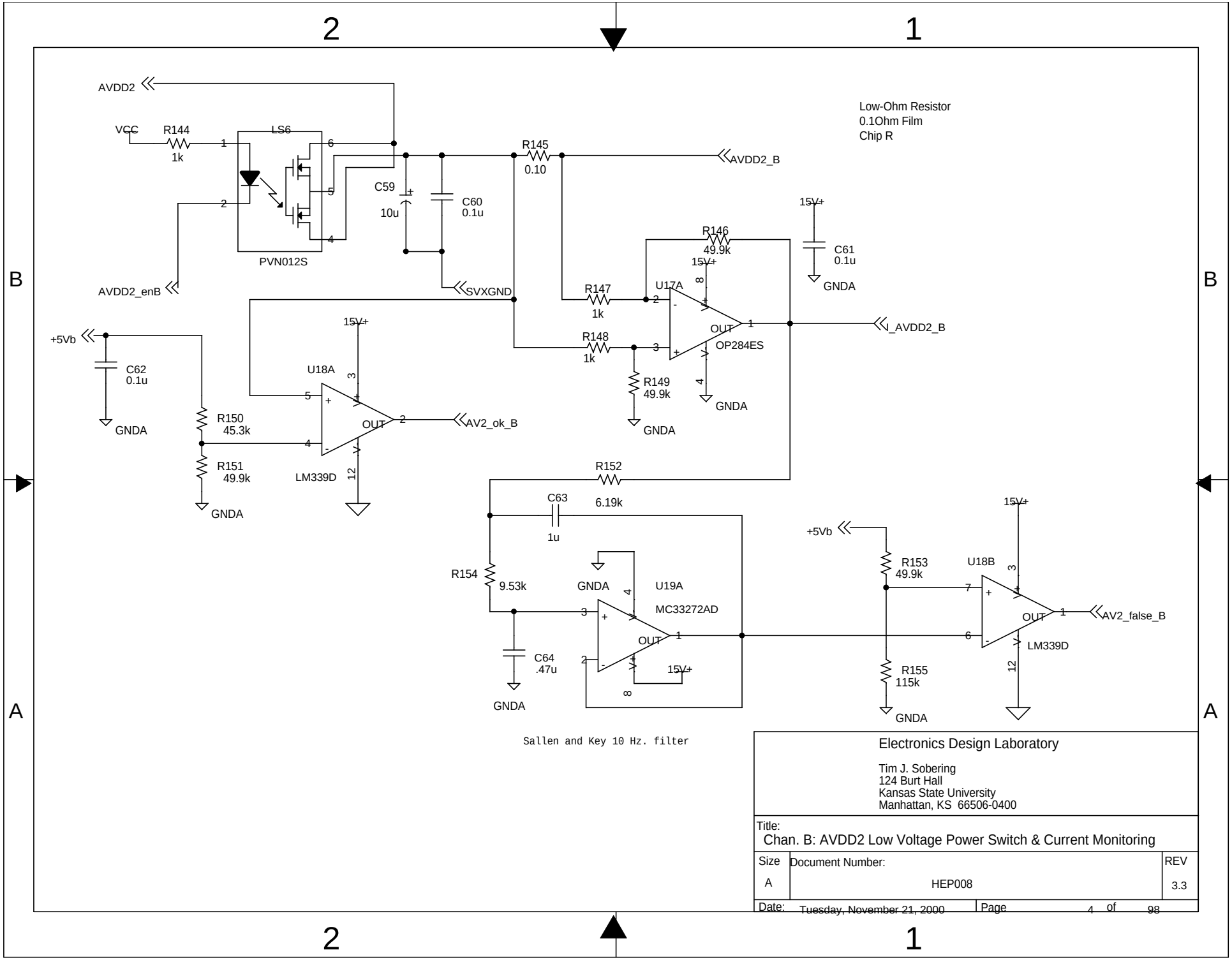
AVDD2
VCC
R144
1k
LS6
PVN012S
AVDD2_enB
C59
10u
C60
0.1u
SVXGND
R145
0.10
AVDD2_B
Low-Ohm Resistor
0.1Ohm Film
Chip R
15V+
C61
0.1u
GNDA
R146
49.9k
U17A
OP284ES
R147
1k
R148
1k
R149
49.9k
I_AVDD2_B
+5Vb
C62
0.1u
R150
45.3k
R151
49.9k
U18A
LM339D
AV2_ok_B
R152
6.19k
C63
1u
R154
9.53k
C64
.47u
U19A
MC33272AD
Sallen and Key 10 Hz. filter
R153
49.9k
R155
115k
U18B
LM339D
AV2_false_B
Electronics Design Laboratory
Tim J. Sobering
124 Burt Hall
Kansas State University
Manhattan, KS 66506-0400
Title:
Chan. B: AVDD2 Low Voltage Power Switch & Current Monitoring
Size
A
Document Number:
HEP008
REV
3.3
Date: Tuesday, November 21, 2000
Page 4 of 98

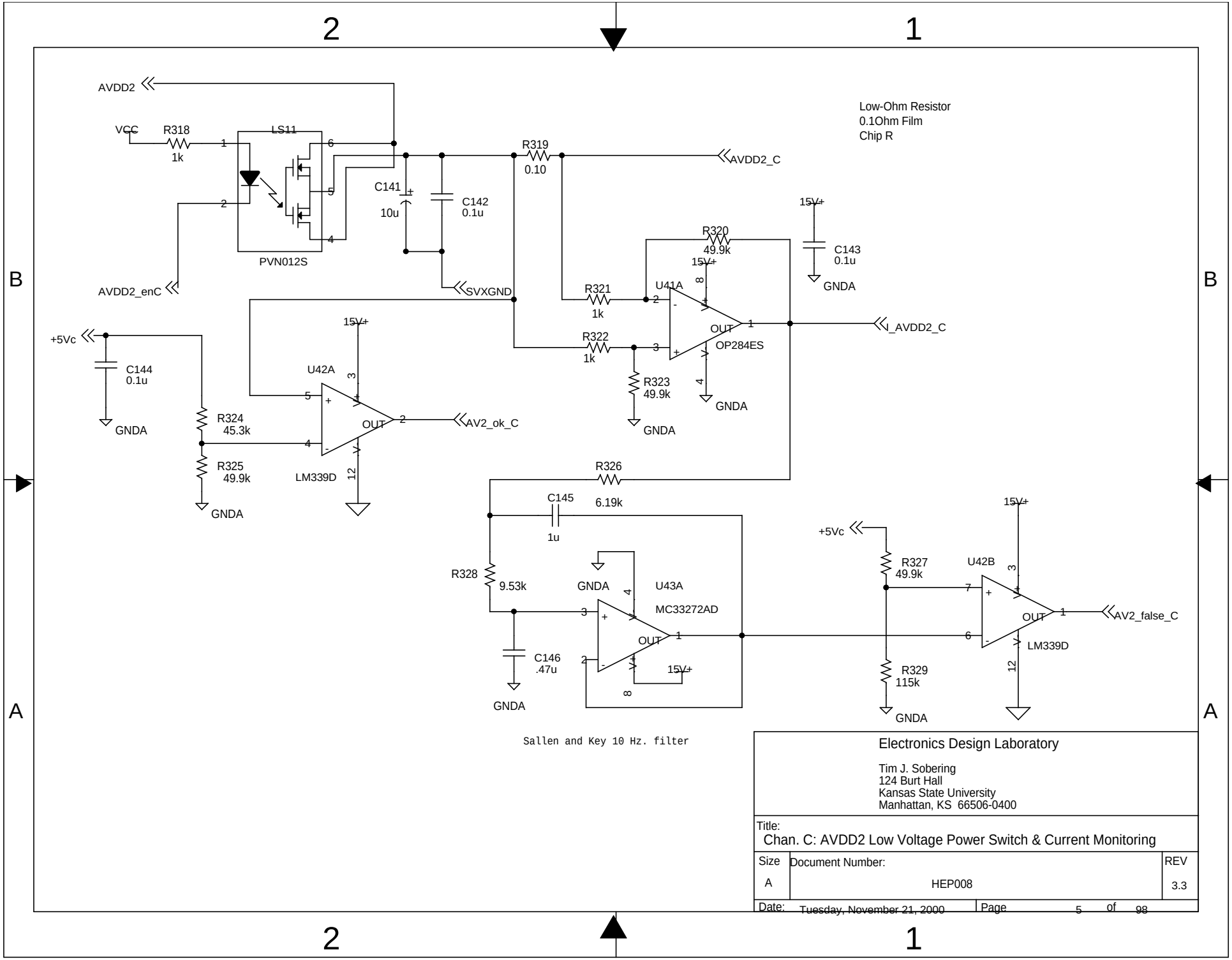
AVDD2
VCC
R318
1k
LS11
PVN012S
AVDD2_enC
C141
10u
C142
0.1u
R319
0.10
AVDD2_C
Low-Ohm Resistor
0.1Ohm Film
Chip R
15V+
C143
0.1u
GNDA
R320
49.9k
U41A
OP284ES
OUT
I_AVDD2_C
SVXGND
R321
1k
R322
1k
R323
49.9k
+5Vc
C144
0.1u
U42A
LM339D
R324
45.3k
R325
49.9k
AV2_ok_C
R326
6.19k
C145
1u
R328
9.53k
U43A
MC33272AD
C146
.47u
R327
49.9k
R329
115k
U42B
AV2_false_C
Sallen and Key 10 Hz. filter
Electronics Design Laboratory
Tim J. Sobering
124 Burt Hall
Kansas State University
Manhattan, KS 66506-0400
Title:
Chan. C: AVDD2 Low Voltage Power Switch & Current Monitoring
Size
A
Document Number:
HEP008
REV
3.3
Date: Tuesday, November 21, 2000
Page 5 of 98

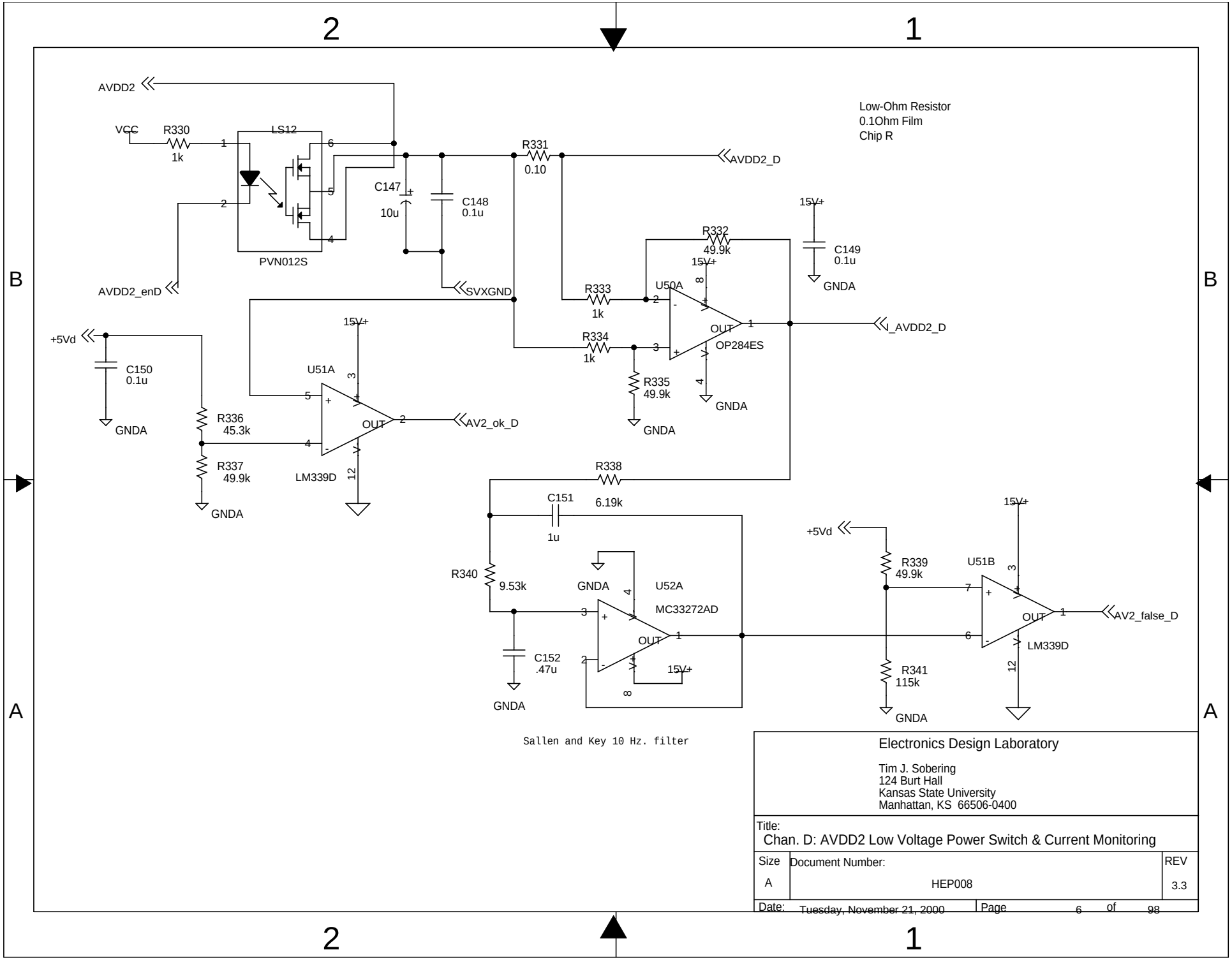
AVDD2
VCC
R330
1k
LS12
PVN012S
AVDD2_enD
C147
10u
C148
0.1u
R331
0.10
AVDD2_D
SVXGND
Low-Ohm Resistor
0.1Ohm Film
Chip R
15V+
C149
0.1u
GNDA
R332
49.9k
R333
1k
R334
1k
U50A
OP284ES
OUT
I_AVDD2_D
R335
49.9k
+5Vd
C150
0.1u
U51A
LM339D
R336
45.3k
R337
49.9k
AV2_ok_D
R338
6.19k
C151
1u
R340
9.53k
U52A
MC33272AD
C152
.47u
R339
49.9k
U51B
R341
115k
AV2_false_D
Sallen and Key 10 Hz. filter
Electronics Design Laboratory
Tim J. Sobering
124 Burt Hall
Kansas State University
Manhattan, KS 66506-0400
Title:
Chan. D: AVDD2 Low Voltage Power Switch & Current Monitoring
Size
A
Document Number:
HEP008
REV
3.3
Date: Tuesday, November 21, 2000
Page 6 of 98

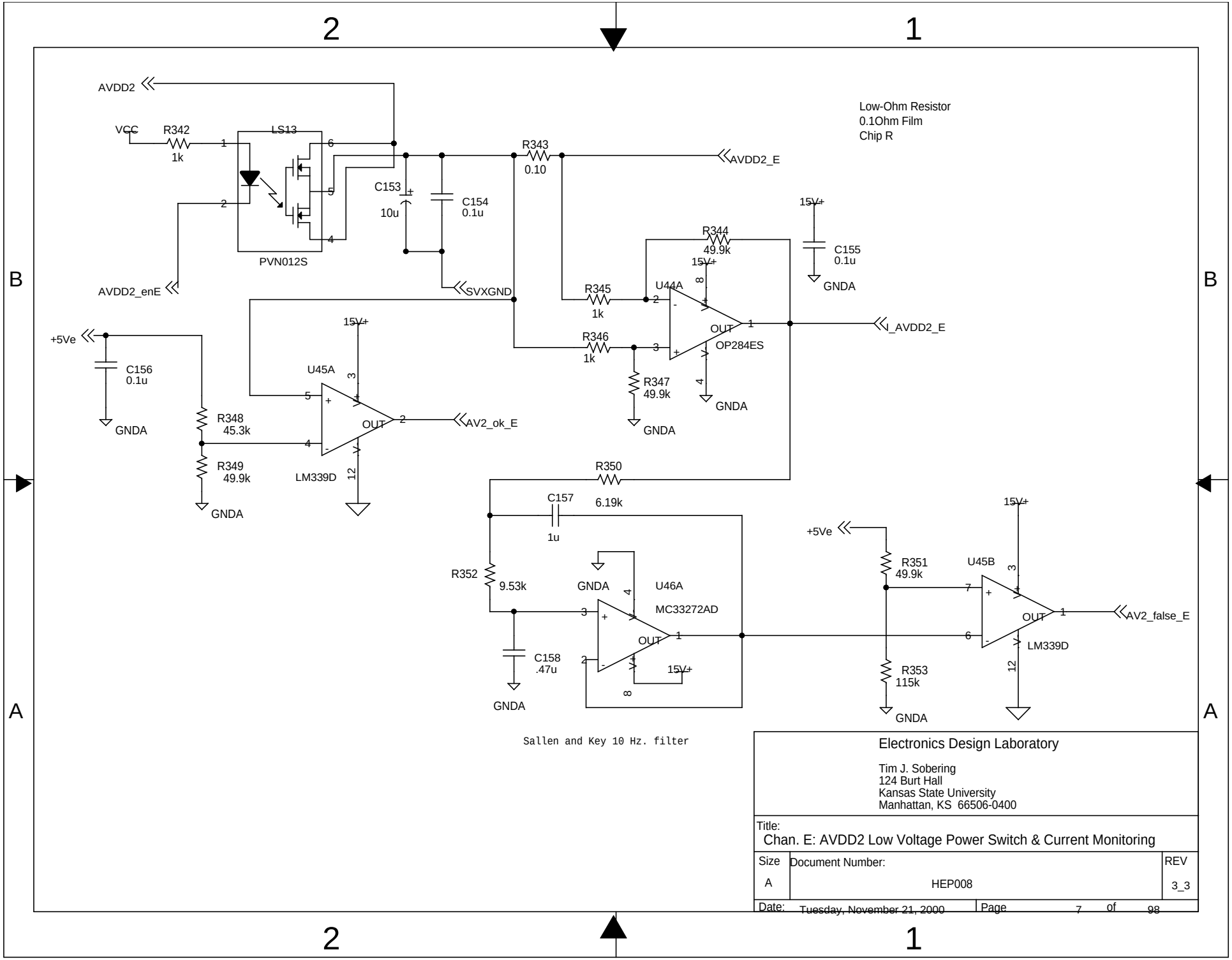
AVDD2
VCC
R342
1k
LS13
PVN012S
AVDD2_enE
C153
10u
C154
0.1u
R343
0.10
AVDD2_E
Low-Ohm Resistor
0.1Ohm Film
Chip R
15V+
C155
0.1u
GNDA
R344
49.9k
U44A
OP284ES
OUT
I_AVDD2_E
SVXGND
R345
1k
R346
1k
R347
49.9k
+5Ve
C156
0.1u
U45A
LM339D
R348
45.3k
R349
49.9k
AV2_ok_E
R350
6.19k
C157
1u
R352
9.53k
U46A
MC33272AD
C158
.47u
R351
49.9k
R353
115k
U45B
AV2_false_E
Sallen and Key 10 Hz. filter
Electronics Design Laboratory
Tim J. Sobering
124 Burt Hall
Kansas State University
Manhattan, KS 66506-0400
Title:
Chan. E: AVDD2 Low Voltage Power Switch & Current Monitoring
Size
A
Document Number:
HEP008
REV
3_3
Date:
Tuesday, November 21, 2000
Page
7
of
98

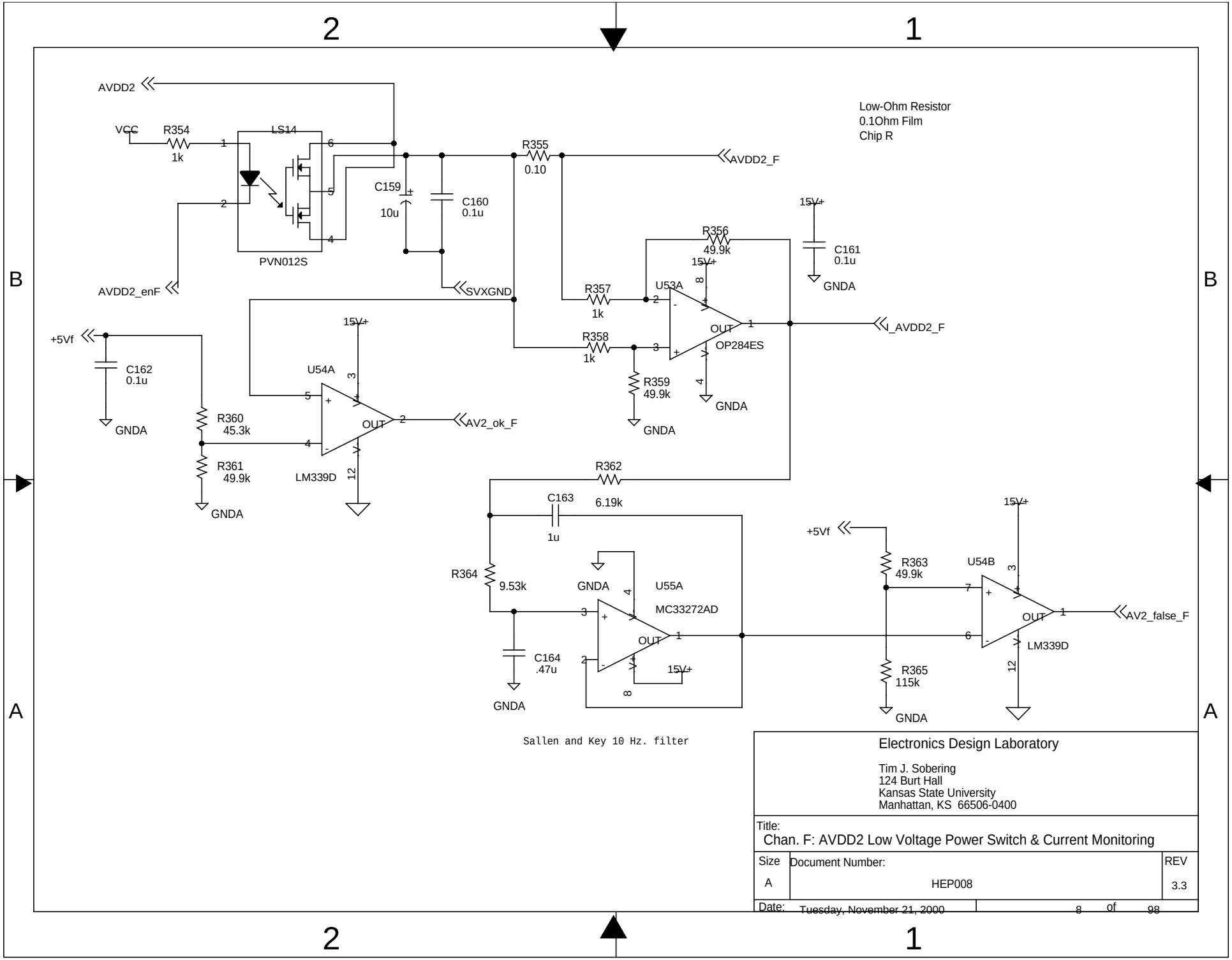
AVDD2
VCC
R354
1k
LS14
PVN012S
AVDD2_enF
C159
10u
C160
0.1u
SVXGND
R355
0.10
AVDD2_F
Low-Ohm Resistor
0.1Ohm Film
Chip R
15V+
C161
0.1u
GNDA
R356
49.9k
U53A
R357
1k
R358
1k
OUT
OP284ES
I_AVDD2_F
R359
49.9k
+5Vf
C162
0.1u
U54A
R360
45.3k
R361
49.9k
LM339D
AV2_ok_F
R362
6.19k
C163
1u
R364
9.53k
U55A
MC33272AD
C164
.47u
R363
49.9k
U54B
R365
115k
AV2_false_F
Sallen and Key 10 Hz. filter
Electronics Design Laboratory
Tim J. Sobering
124 Burt Hall
Kansas State University
Manhattan, KS 66506-0400
Title:
Chan. F: AVDD2 Low Voltage Power Switch & Current Monitoring
Size
A
Document Number:
HEP008
REV
3.3
Date: Tuesday, November 21, 2000
8 of 98

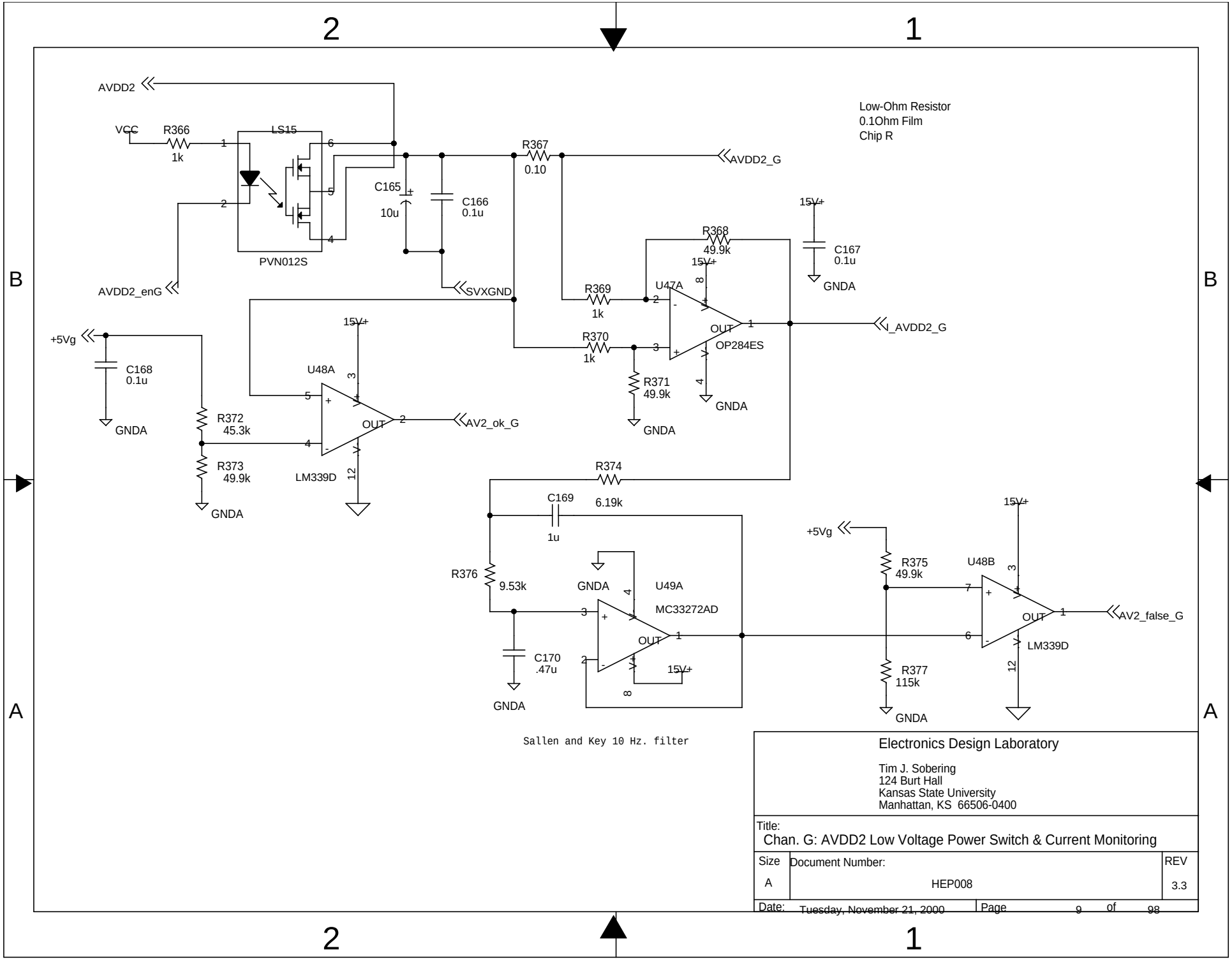

Electronics Design Laboratory

Tim J. Sobering
124 Burt Hall
Kansas State University
Manhattan, KS 66506-0400

Title: Chan. G: AVDD2 Low Voltage Power Switch & Current Monitoring

Size	Document Number:	REV
A	HEP008	3.3

Date: Tuesday, November 21, 2000 | Page 9 of 98

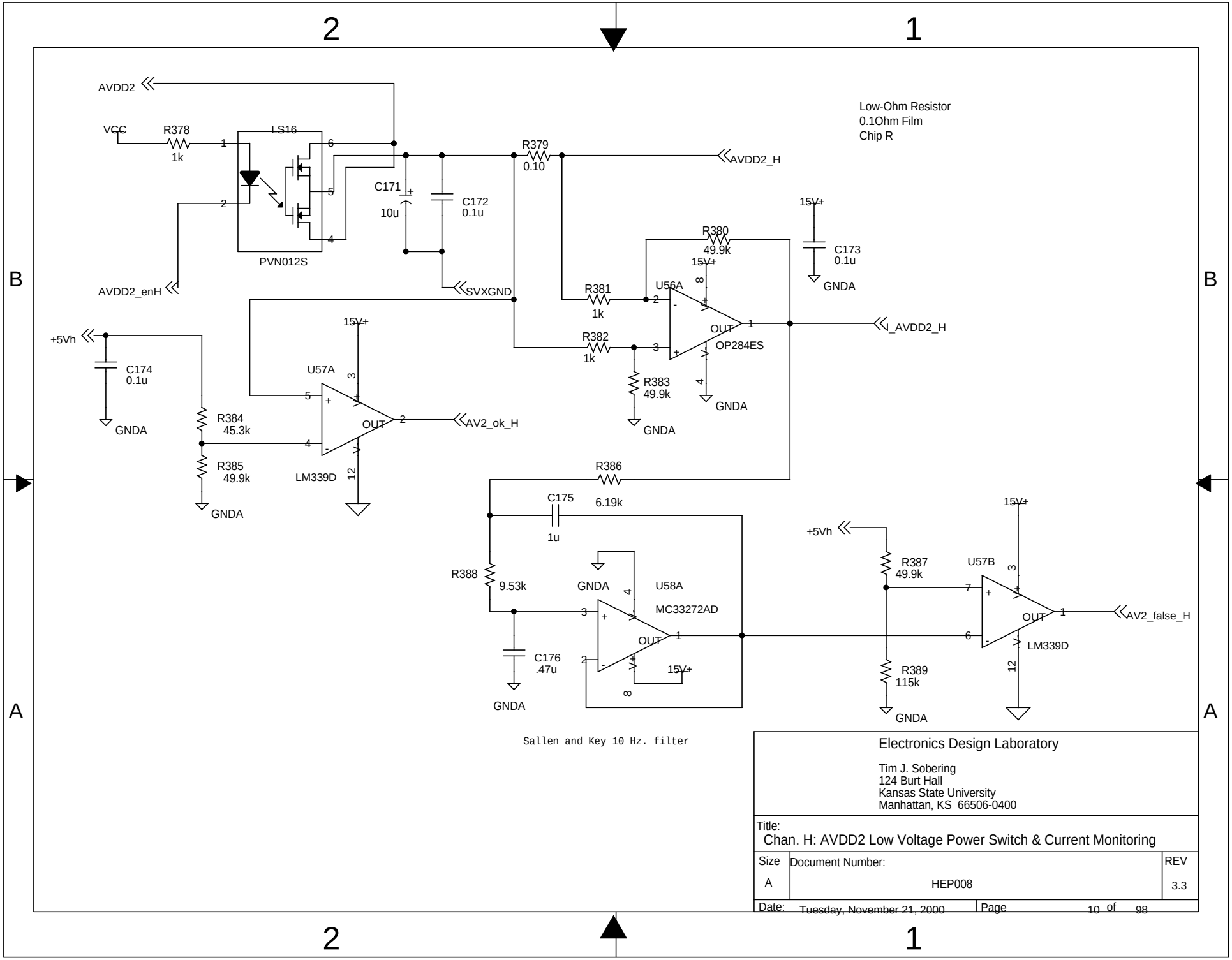
AVDD2
VCC
R378
1k
LS16
PVN012S
AVDD2_enH
C171
10u
C172
0.1u
SVXGND
R379
0.10
AVDD2_H
Low-Ohm Resistor
0.1Ohm Film
Chip R
15V+
C173
0.1u
GNDA
R380
49.9k
U56A
OP284ES
OUT
R381
1k
R382
1k
R383
49.9k
I_AVDD2_H
+5Vh
C174
0.1u
R384
45.3k
R385
49.9k
U57A
LM339D
AV2_ok_H
R386
6.19k
C175
1u
R388
9.53k
U58A
MC33272AD
C176
.47u
R387
49.9k
R389
115k
U57B
AV2_false_H
Sallen and Key 10 Hz. filter
Electronics Design Laboratory
Tim J. Sobering
124 Burt Hall
Kansas State University
Manhattan, KS 66506-0400
Title:
Chan. H: AVDD2 Low Voltage Power Switch & Current Monitoring
Size
A
Document Number:
HEP008
REV
3.3
Date: Tuesday, November 21, 2000
Page 10 of 98

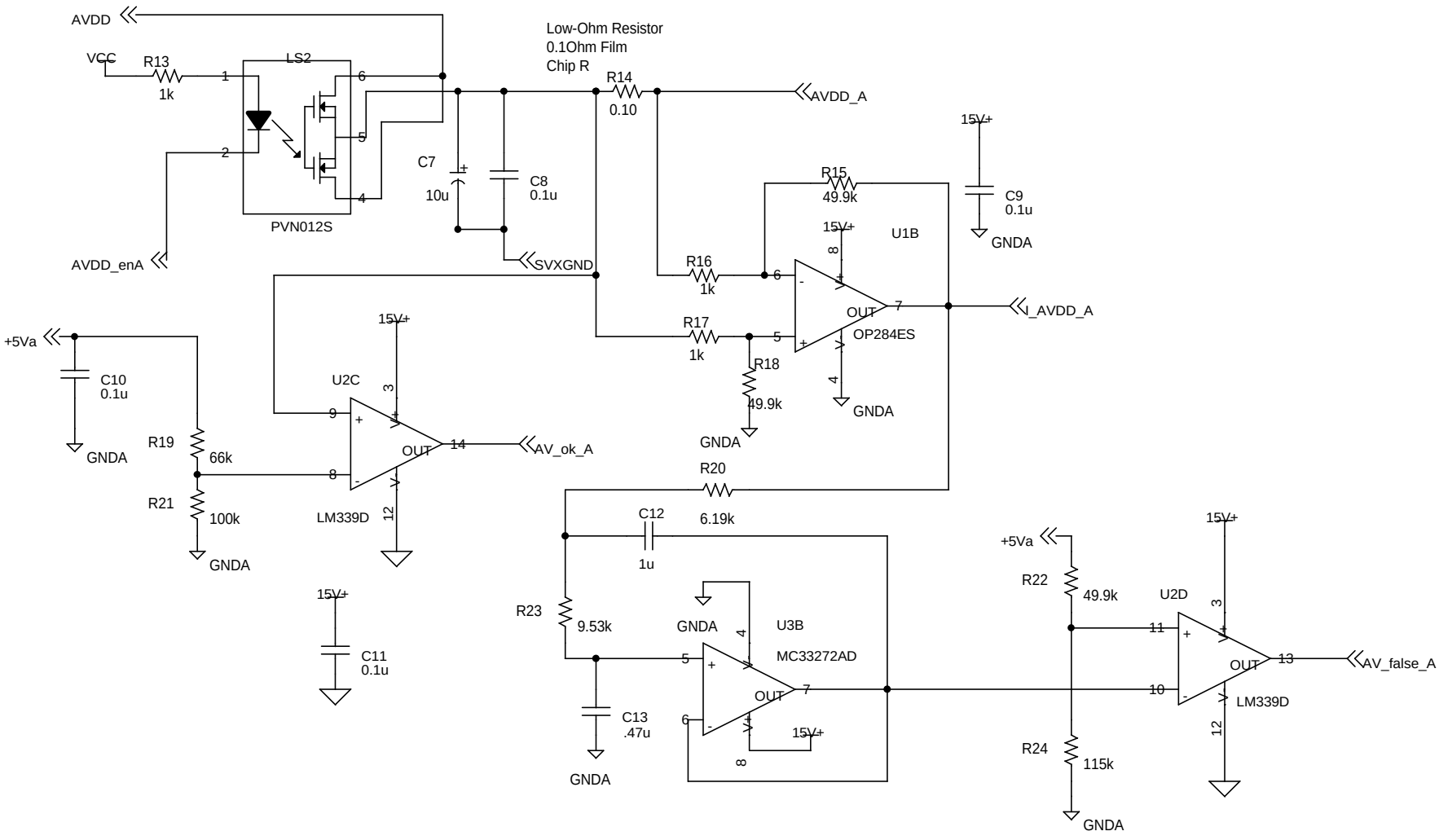

Sallen and Key 10 Hz. filter

Electronics Design Laboratory

Tim J. Sobering
124 Burt Hall
Kansas State University
Manhattan, KS 66506-0400

Title: Chan. A: AVDD Low Voltage Power Switch & Current Monitoring

Size	Document Number:	REV
A	HEP008	3.3

Date: Tuesday, November 21, 2000 Page 11 of 98

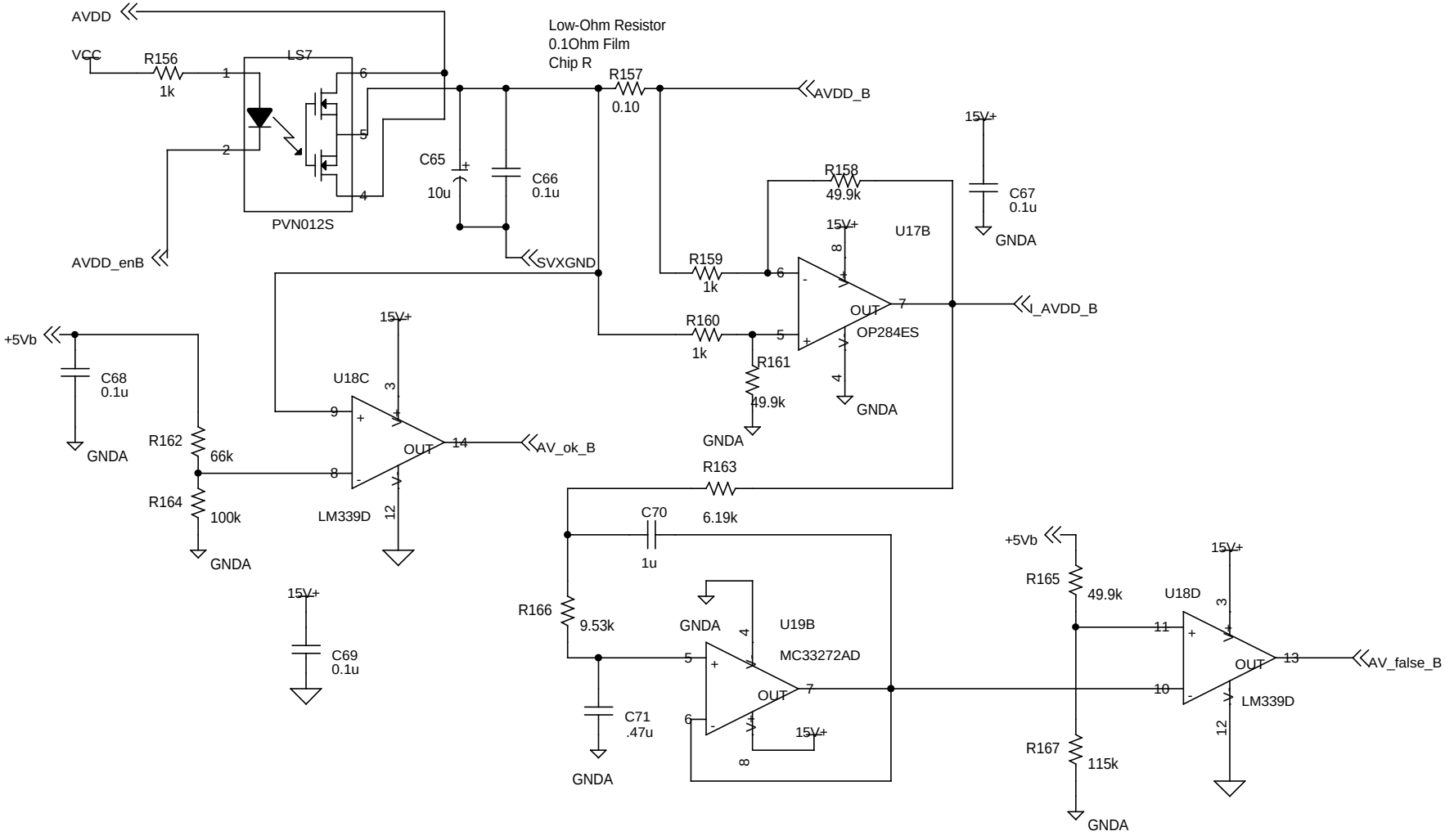

Sallen and Key 10 Hz. filter

Electronics Design Laboratory

Tim J. Sobering
124 Burt Hall
Kansas State University
Manhattan, KS 66506-0400

Title:
Chan. B: AVDD Low Voltage Power Switch & Current Monitoring

Size	Document Number:	REV
A	HEP008	3.3

Date: Tuesday, November 21, 2000 Page 12 of 98

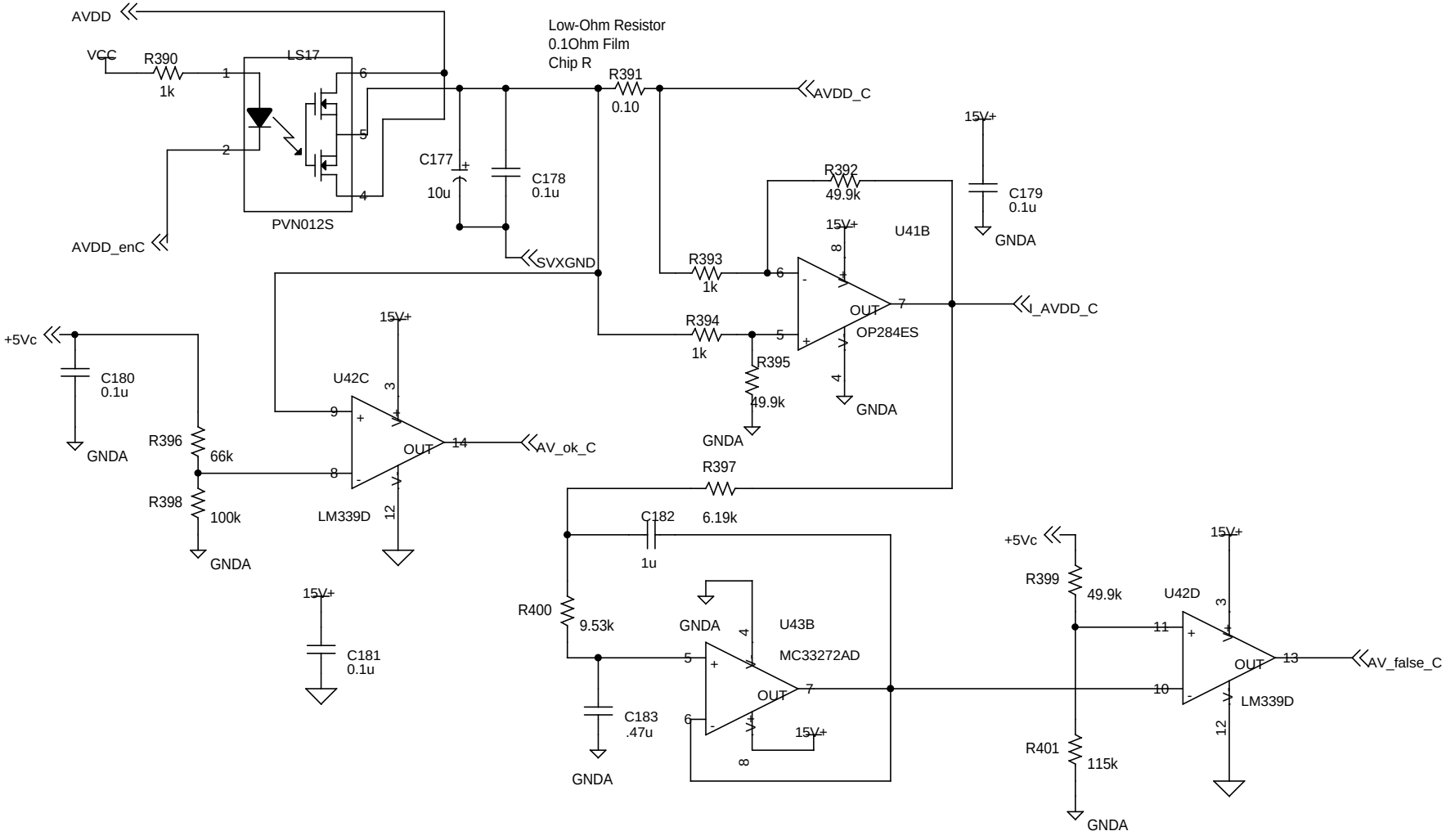

Sallen and Key 10 Hz. filter

Electronics Design Laboratory

Tim J. Sobering
124 Burt Hall
Kansas State University
Manhattan, KS 66506-0400

Title:
Chan. C: AVDD Low Voltage Power Switch & Current Monitoring

Size	Document Number:	REV
A	HEP008	3.3

Date: Tuesday, November 21, 2000 13 of 98

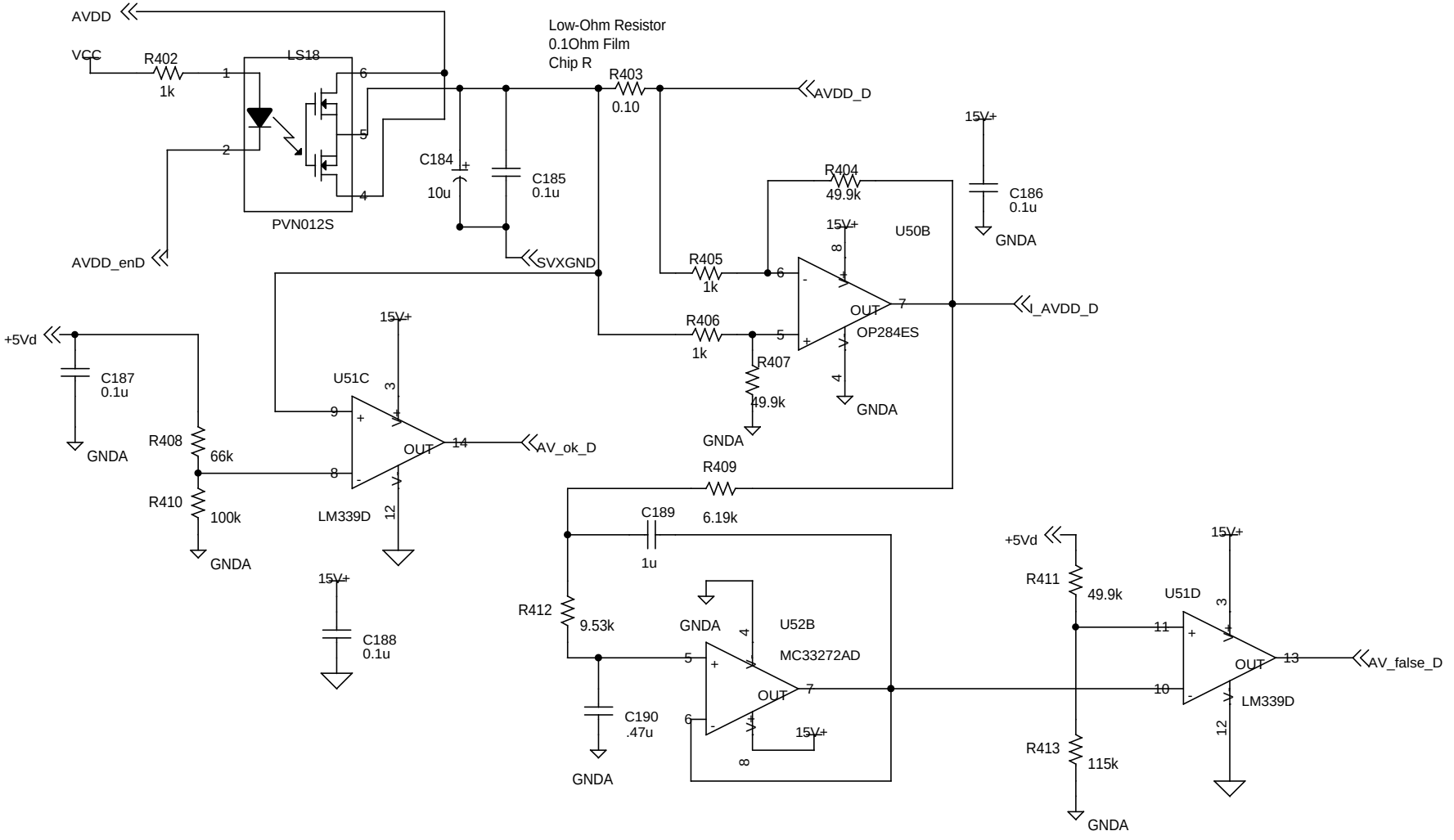

Sallen and Key 10 Hz. filter

Electronics Design Laboratory

Tim J. Sobering
124 Burt Hall
Kansas State University
Manhattan, KS 66506-0400

Title:
Chan. D: AVDD Low Voltage Power Switch & Current Monitoring

Size	Document Number:	REV
A	HEP008	3.3

Date: Tuesday, November 21, 2000 Page 14 of 98

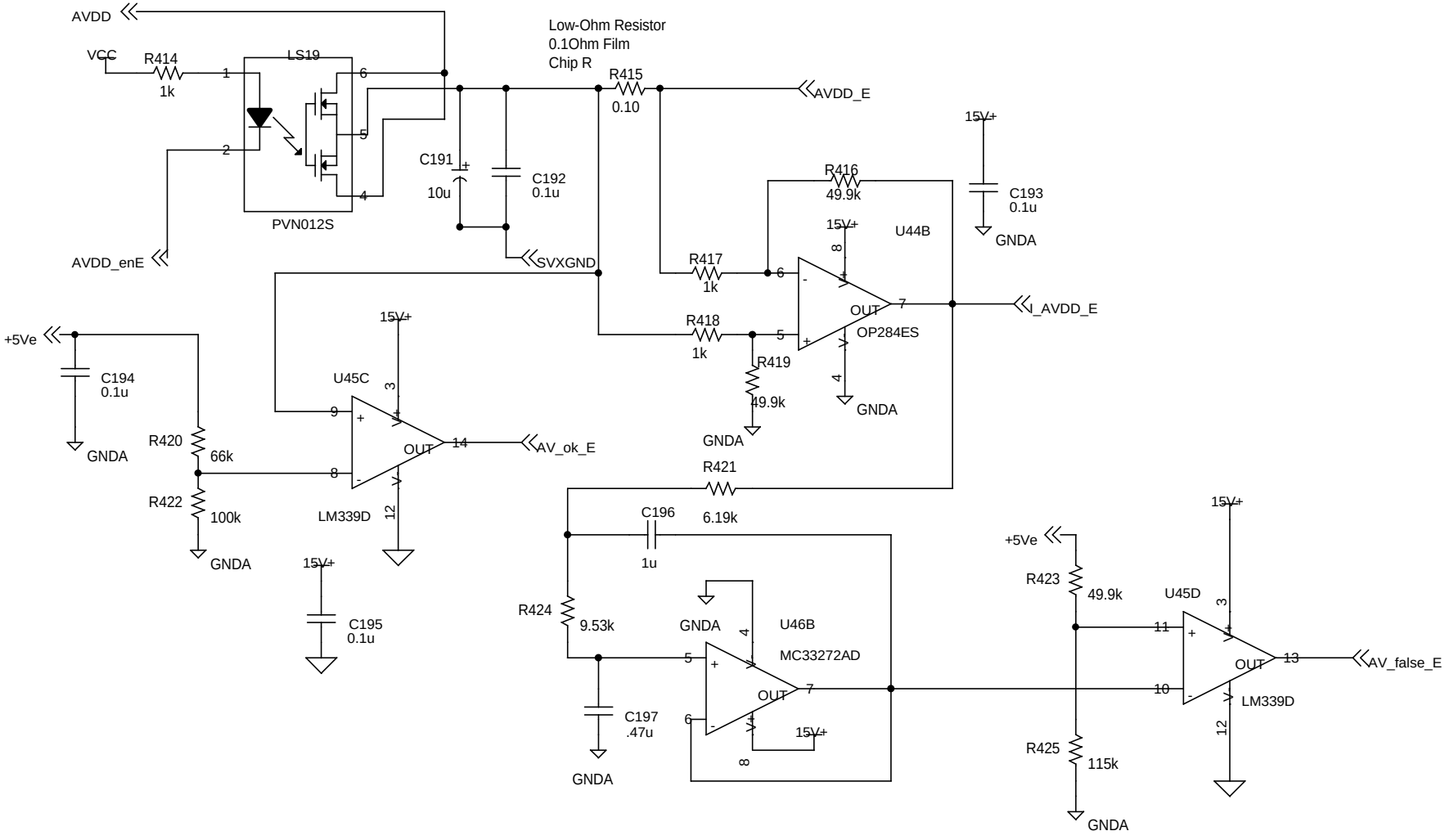

Sallen and Key 10 Hz. filter

Electronics Design Laboratory

Tim J. Sobering
124 Burt Hall
Kansas State University
Manhattan, KS 66506-0400

Title: Chan. E: AVDD Low Voltage Power Switch & Current Monitoring

Size	Document Number:	REV
A	HEP008	3.3

Date: Tuesday, November 21, 2000 Page 15 of 98

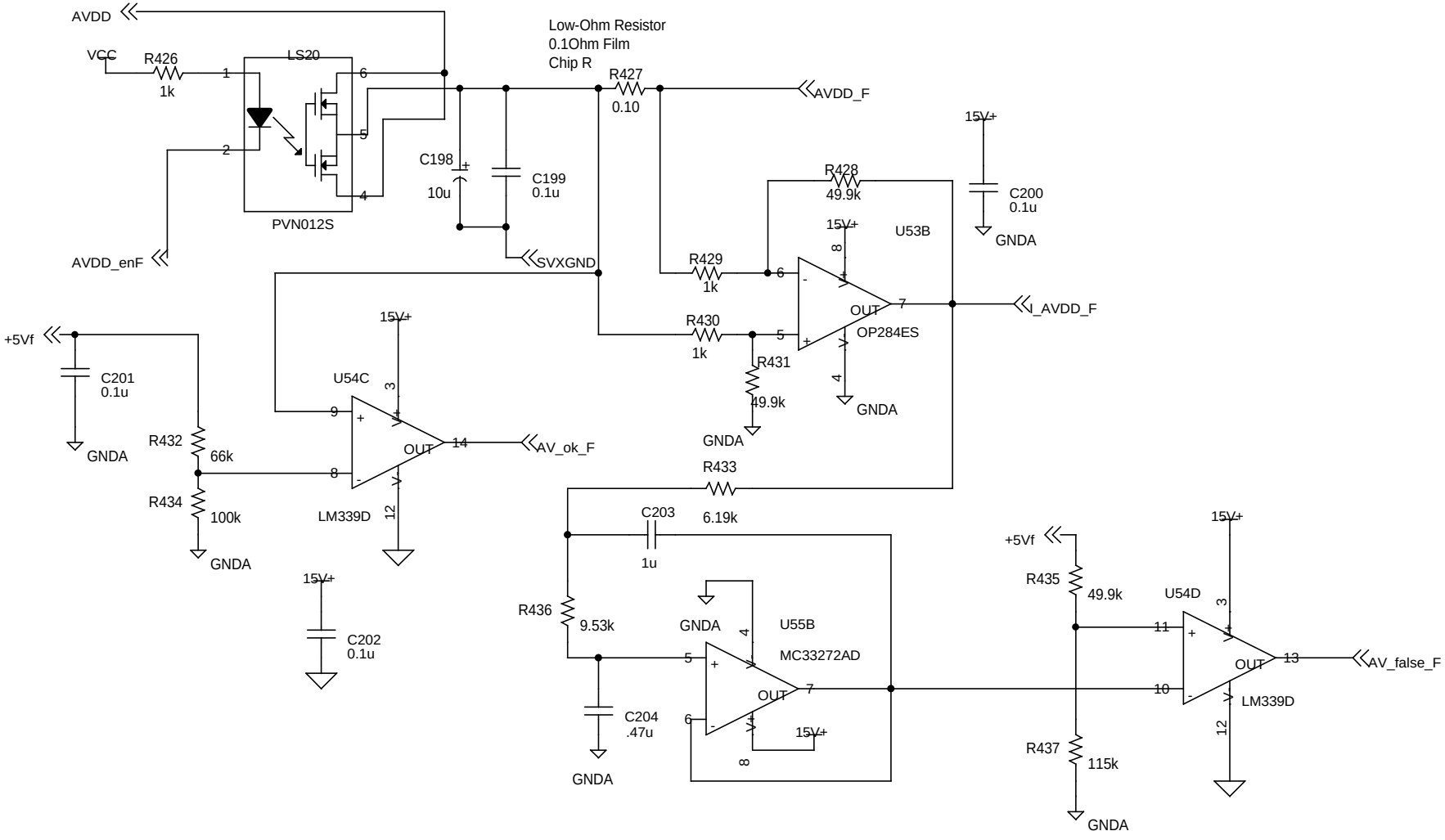

Sallen and Key 10 Hz. filter

Electronics Design Laboratory

Tim J. Sobering
124 Burt Hall
Kansas State University
Manhattan, KS 66506-0400

Title:
Chan. F: AVDD Low Voltage Power Switch & Current Monitoring

Size	Document Number:	REV
A	HEP008	3.3

Date: Tuesday, November 21, 2000 Page 16 of 98

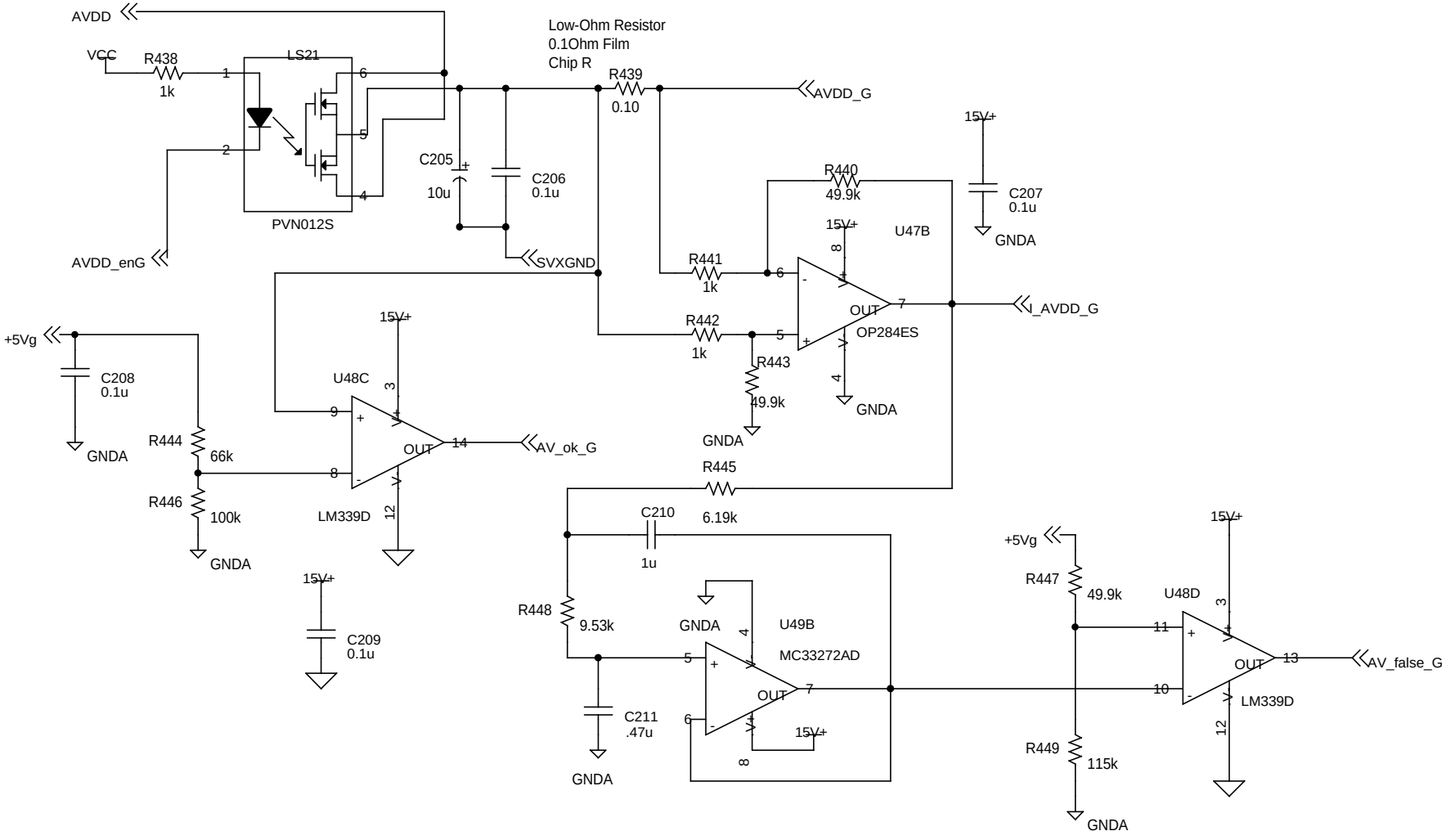

Sallen and Key 10 Hz. filter

Electronics Design Laboratory

Tim J. Sobering
124 Burt Hall
Kansas State University
Manhattan, KS 66506-0400

Title:
Chan. G: AVDD Low Voltage Power Switch & Current Monitoring

Size	Document Number:	REV
A	HEP008	3.3

Date: Tuesday, November 21, 2000 Page 17 of 98

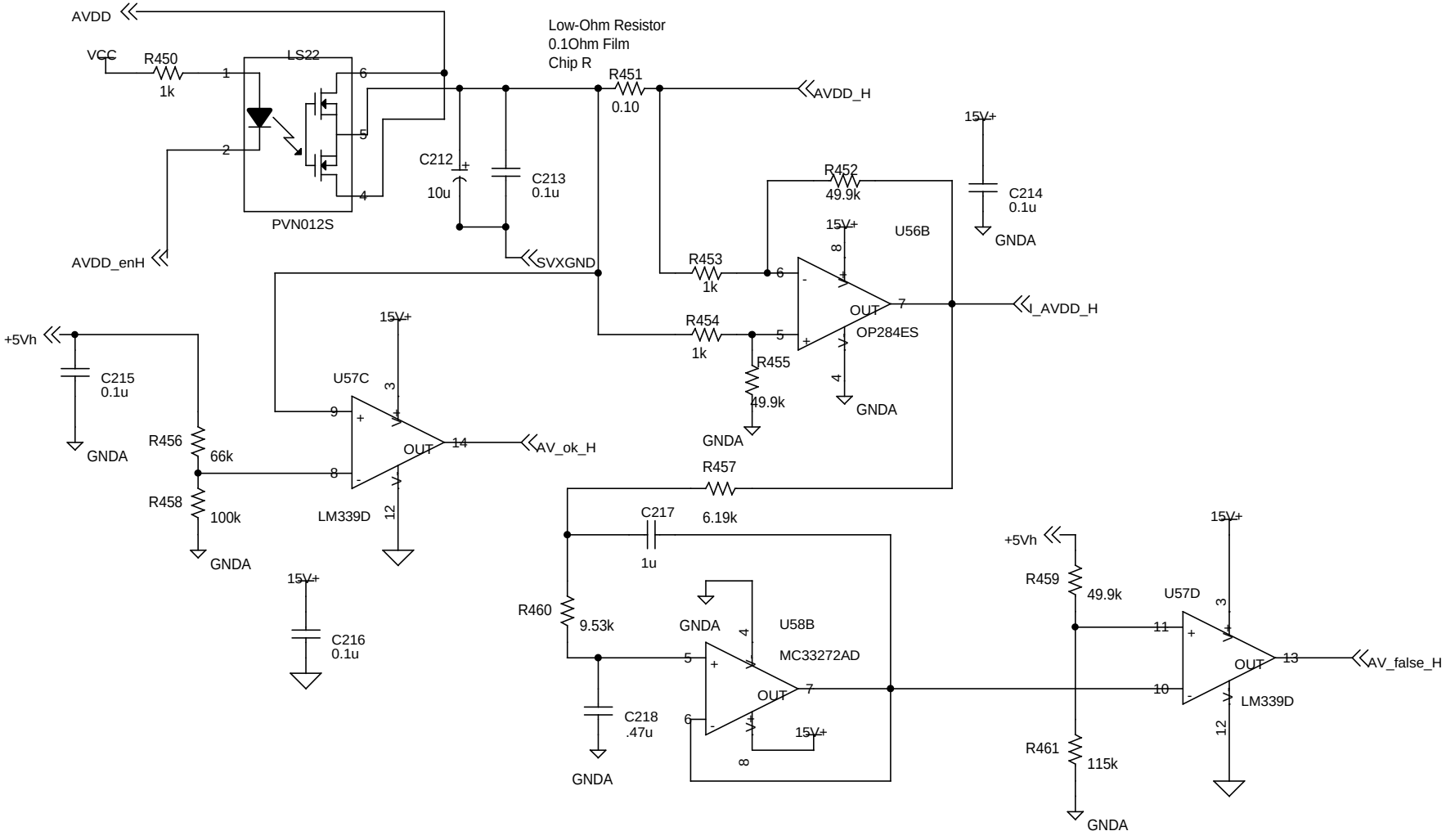

Sallen and Key 10 Hz. filter

Electronics Design Laboratory

Tim J. Sobering
124 Burt Hall
Kansas State University
Manhattan, KS 66506-0400

Title: Chan. H: AVDD Low Voltage Power Switch & Current Monitoring

Size	Document Number:	REV
A	HEP008	3.3

Date: Tuesday, November 21, 2000 Page 18 of 98

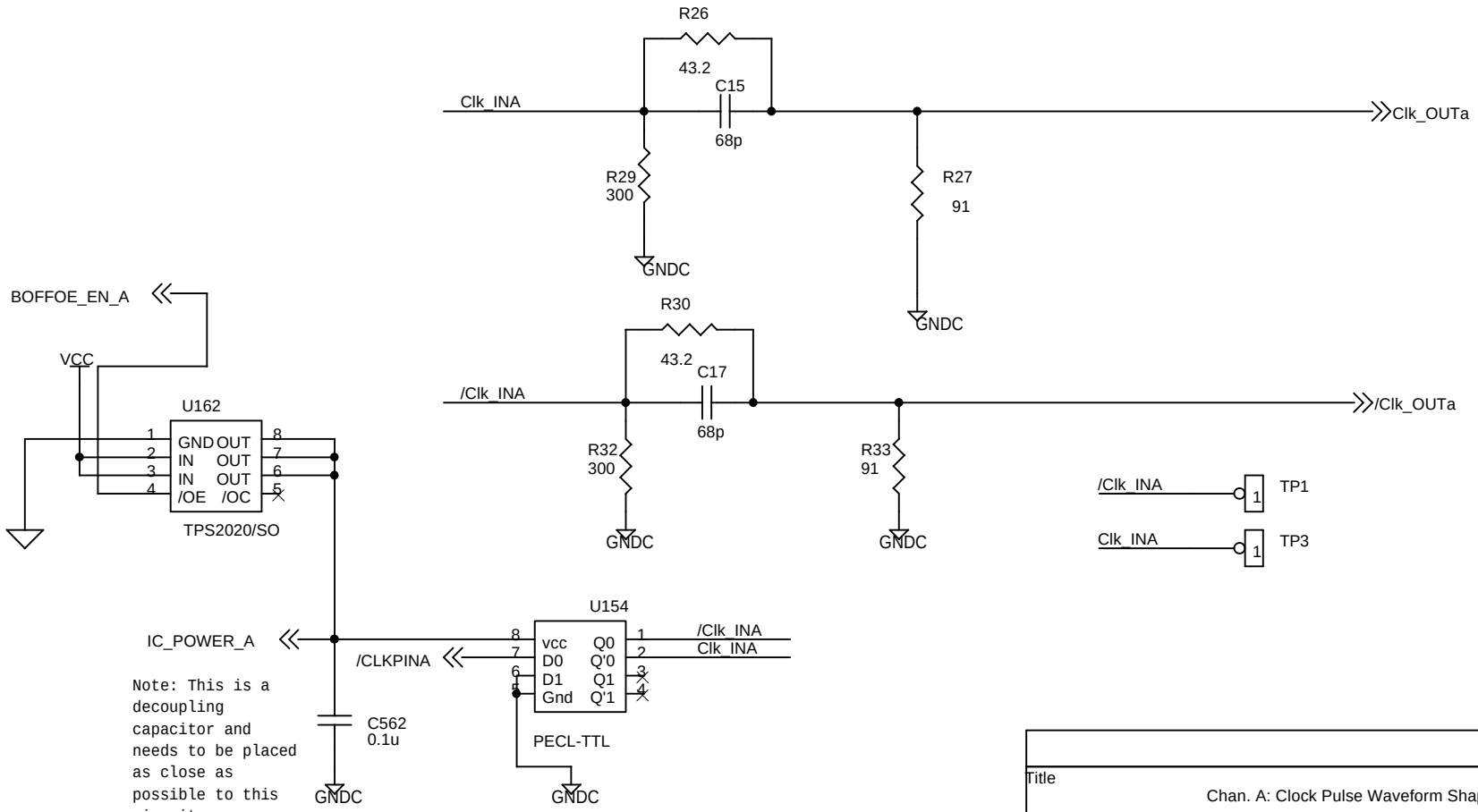

Title	Chan. A: Clock Pulse Waveform Shaping	
Size A	Document Number HEP008	Rev 3.3
Date: Tuesday, November 21, 2000	Sheet 19 of 98	

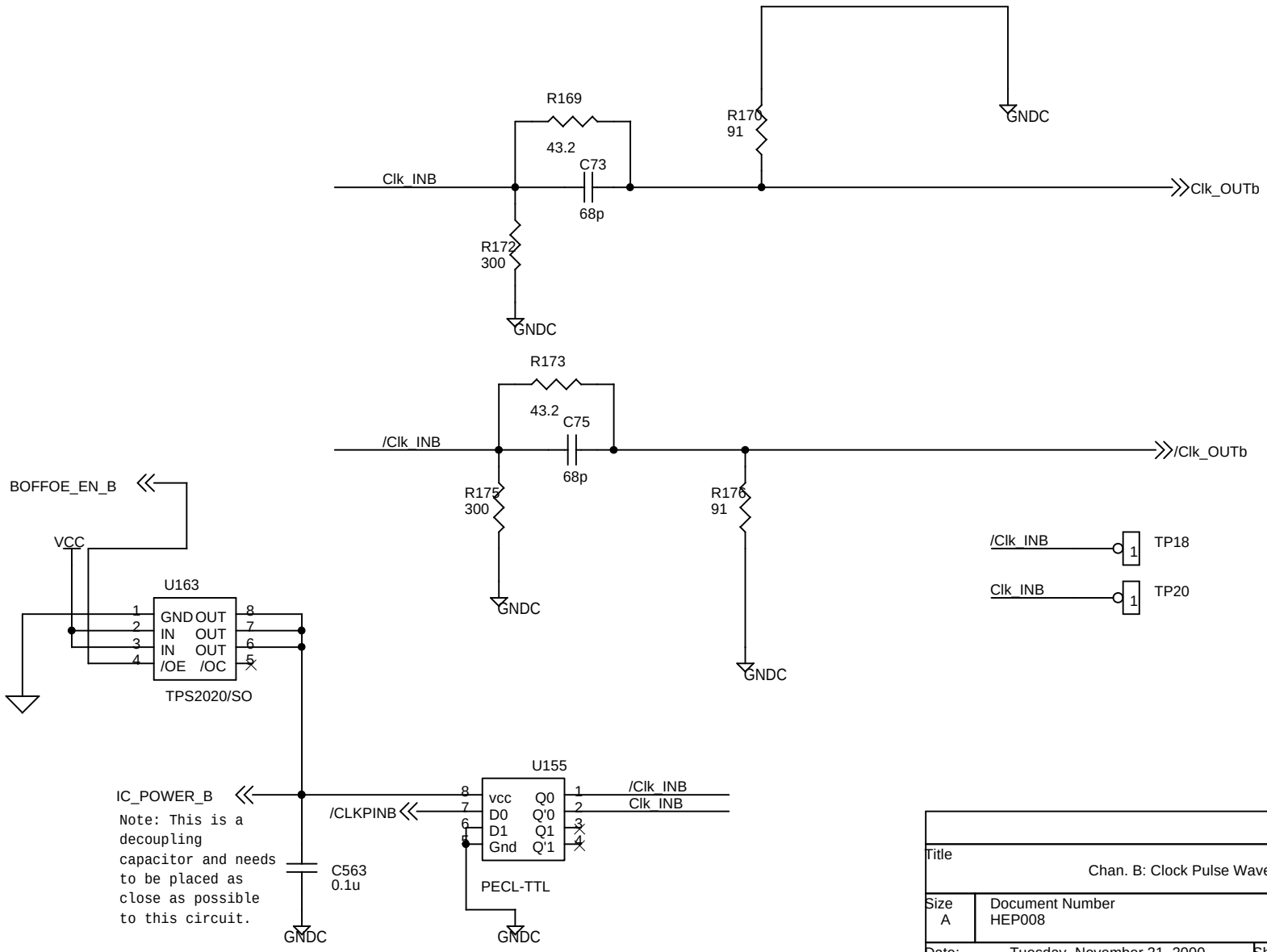

Title
Chan. B: Clock Pulse Waveform Shaping

Size	Document Number	Rev
A	HEP008	3.3

Date: Tuesday, November 21, 2000 Sheet 20 of 98

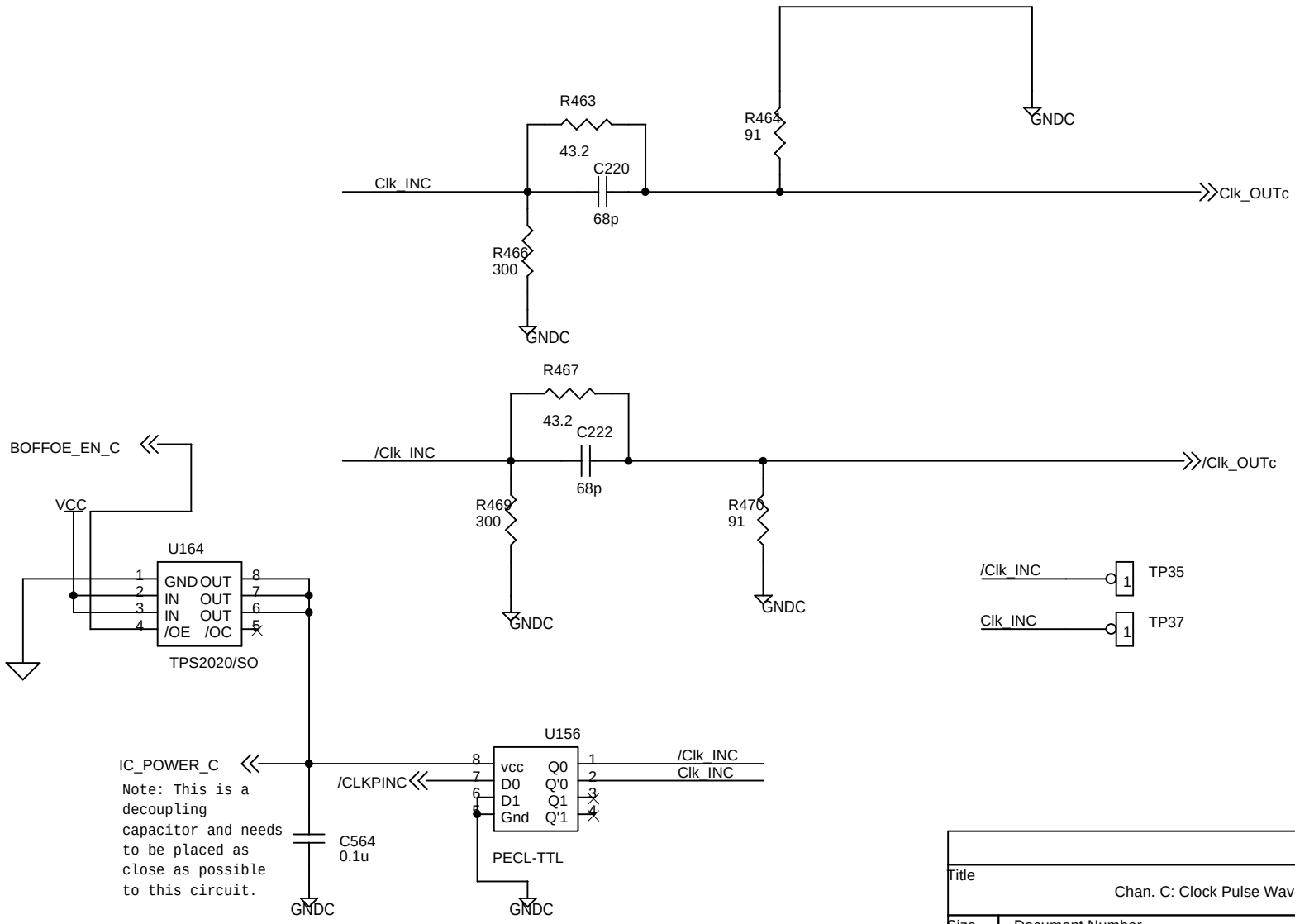

Title	Chan. C: Clock Pulse Waveform Shaping	
Size A	Document Number HEP008	Rev 3.3
Date: Tuesday, November 21, 2000	Sheet 21 of 98	

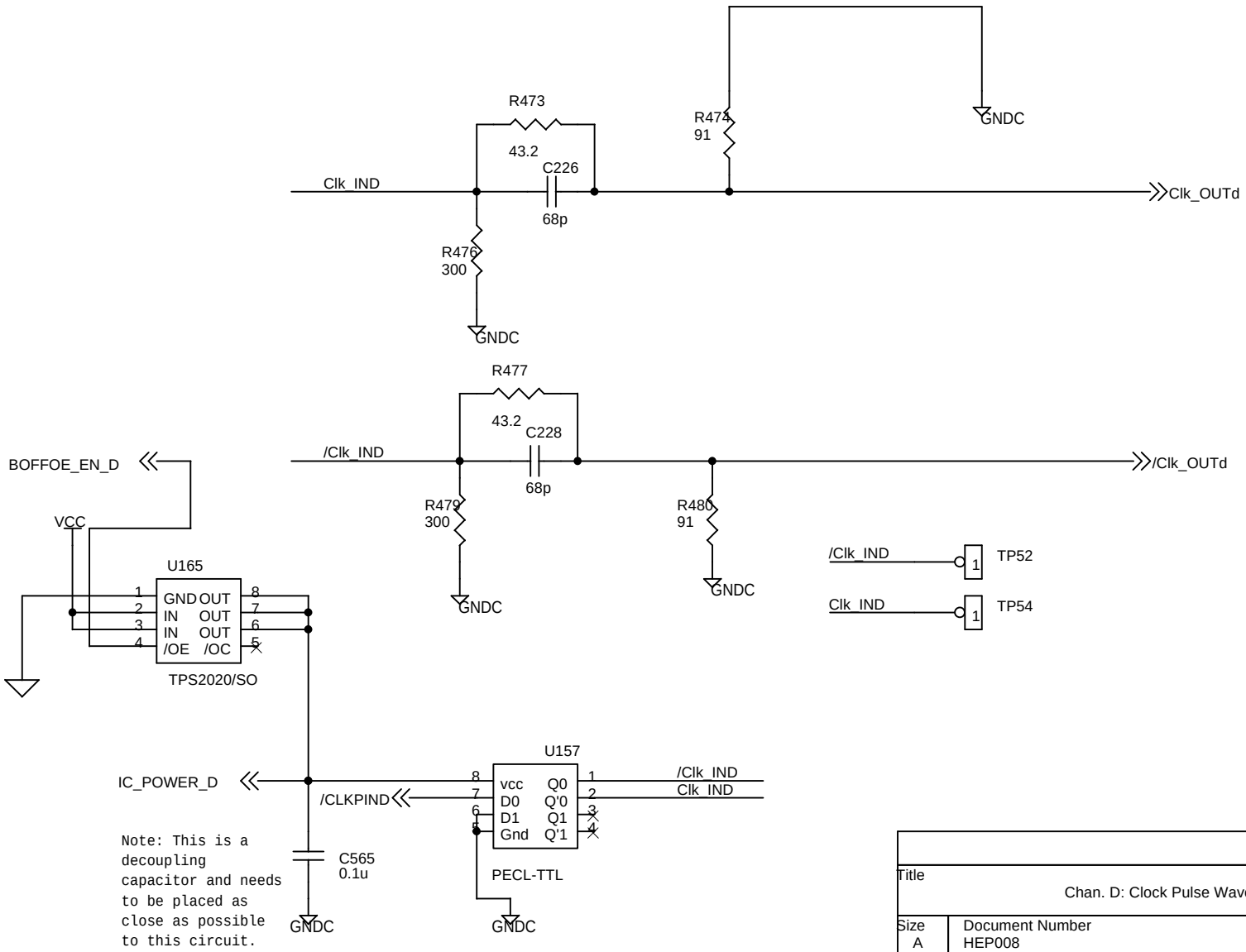

Note: This is a decoupling capacitor and needs to be placed as close as possible to this circuit.

Title	Chan. D: Clock Pulse Waveform Shaping	
Size A	Document Number HEP008	Rev 3.3
Date: Tuesday, November 21, 2000	Sheet 22 of 98	

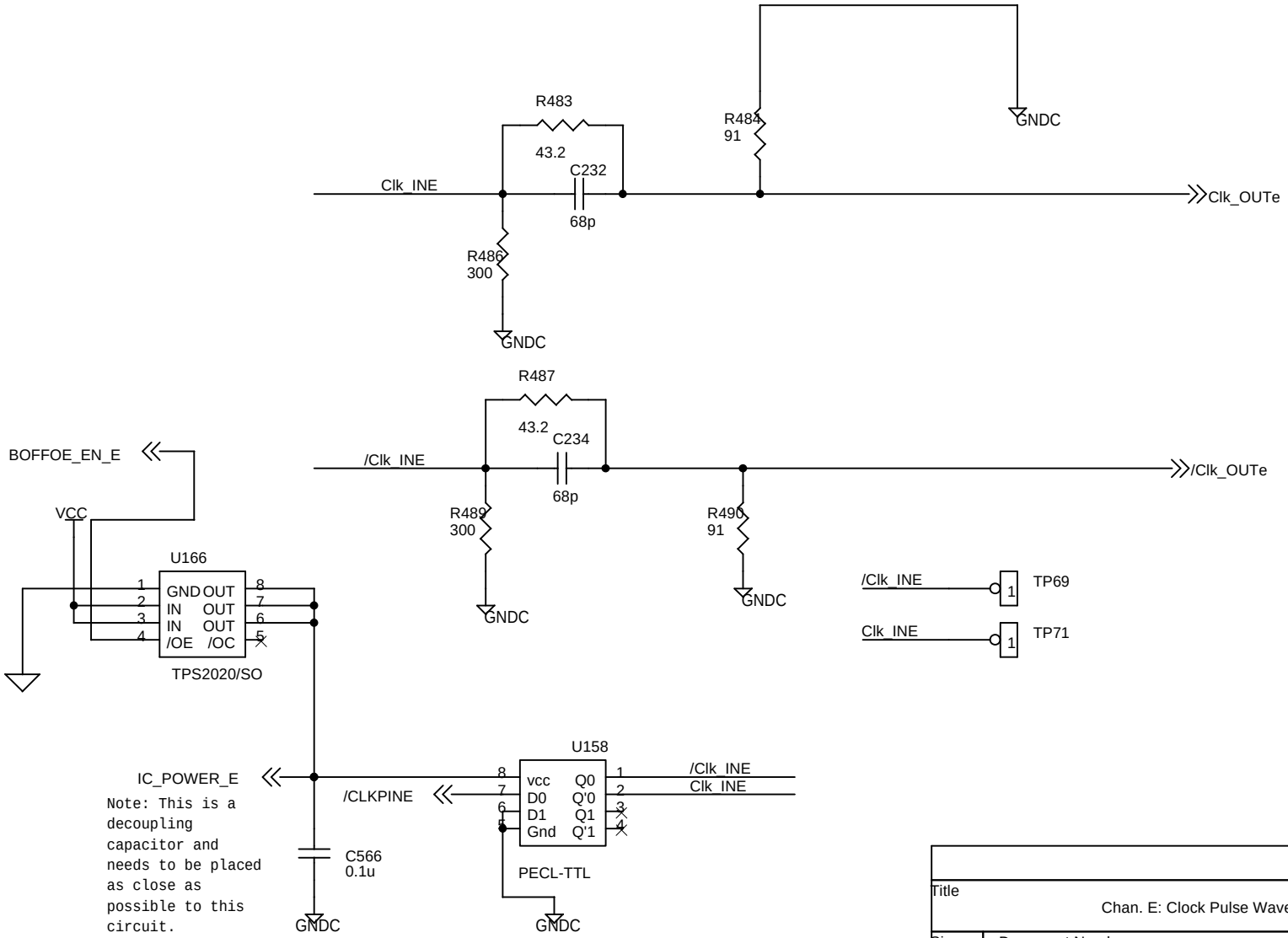

Title	Chan. E: Clock Pulse Waveform Shaping	
Size A	Document Number HEP008	Rev 3.3
Date: Tuesday, November 21, 2000	Sheet 23 of 98	

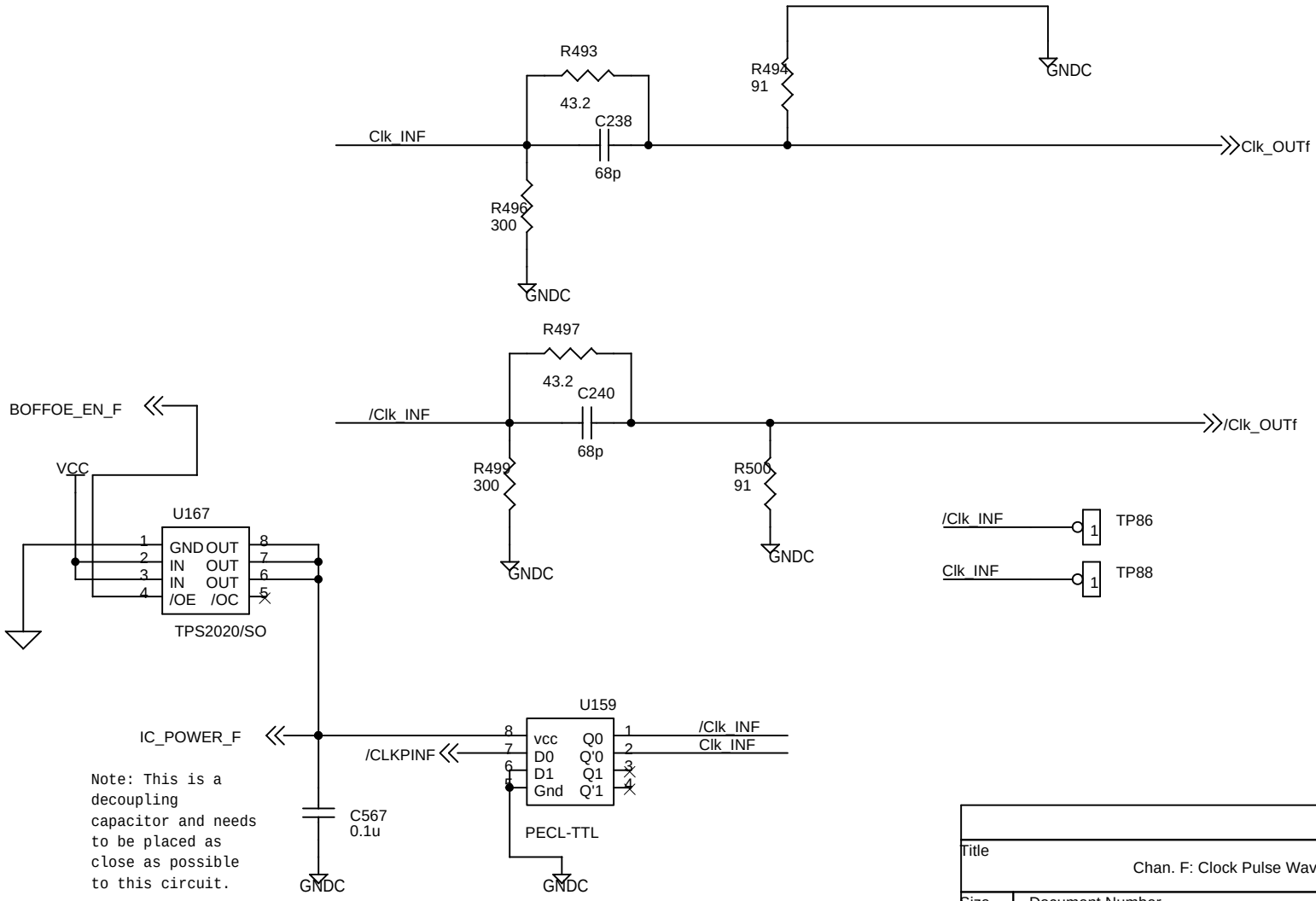

Title	Chan. F: Clock Pulse Waveform Shaping	
Size A	Document Number HEP008	Rev 3.3
Date: Tuesday, November 21, 2000	Sheet 24 of 98	

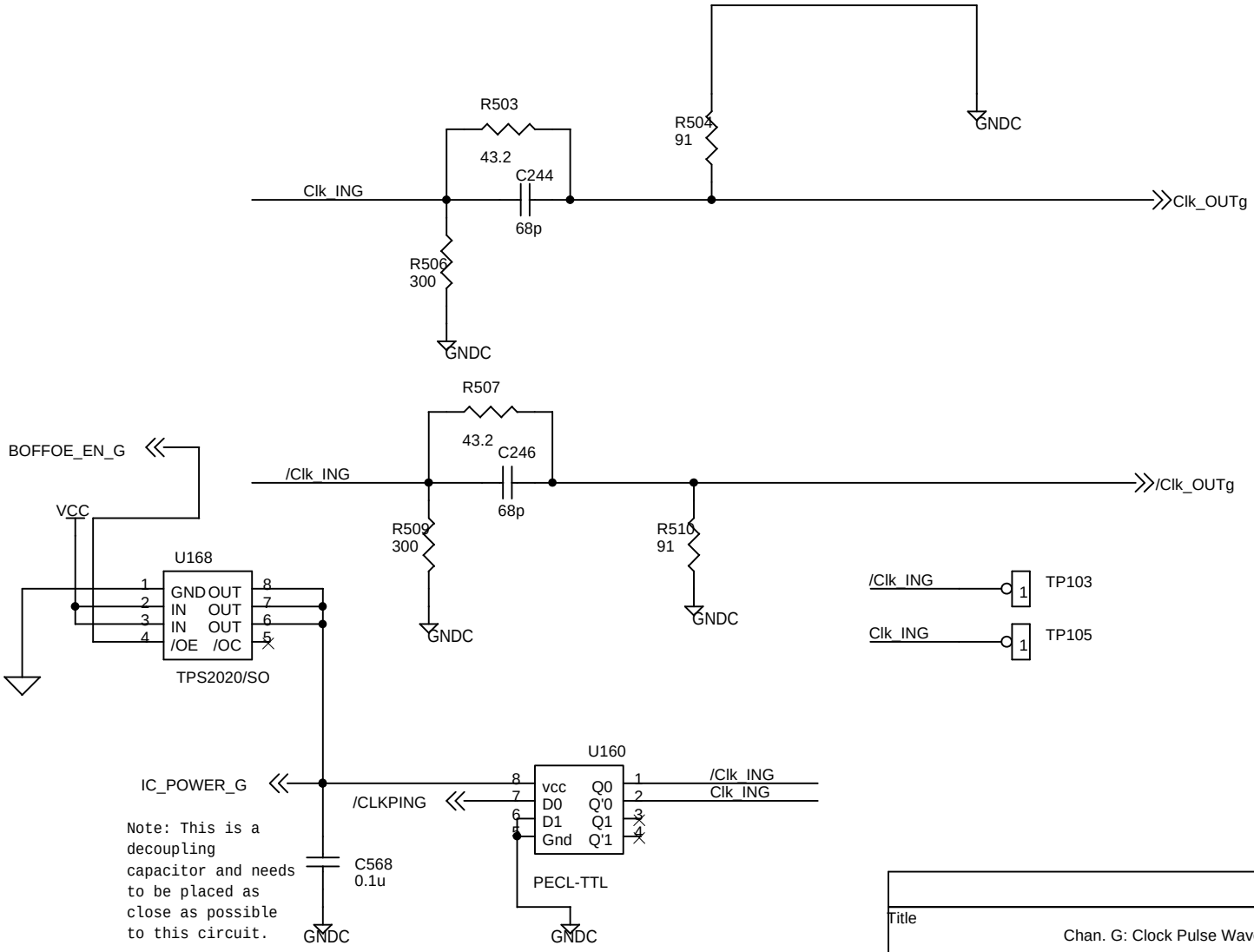

Title	Chan. G: Clock Pulse Waveform Shaping	
Size A	Document Number HEP008	Rev 3.3
Date: Tuesday, November 21, 2000	Sheet 25 of 98	

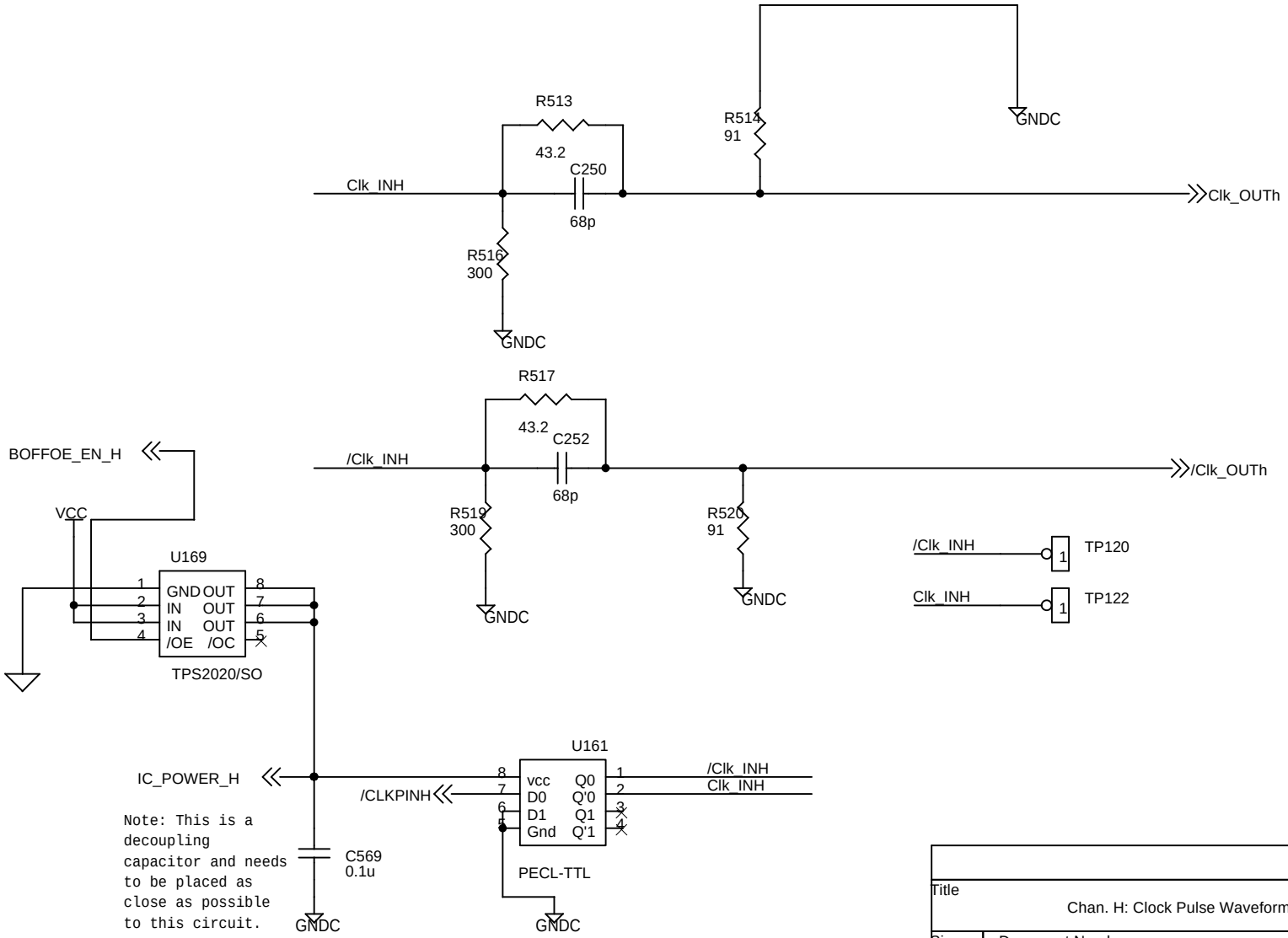

Title	Chan. H: Clock Pulse Waveform Shaping	
Size A	Document Number HEP008	Rev 3.3
Date: Tuesday, November 21, 2000	Sheet 26 of 98	

Sequencer Side

(Back Plane)

Clock signals go through the
10-contact header to a daughter
board with coax connectors.
Coax Connectors are Johnson MMCX
connectors (p.n. 135-3701-311)

SVX Chips

(Front Panel)

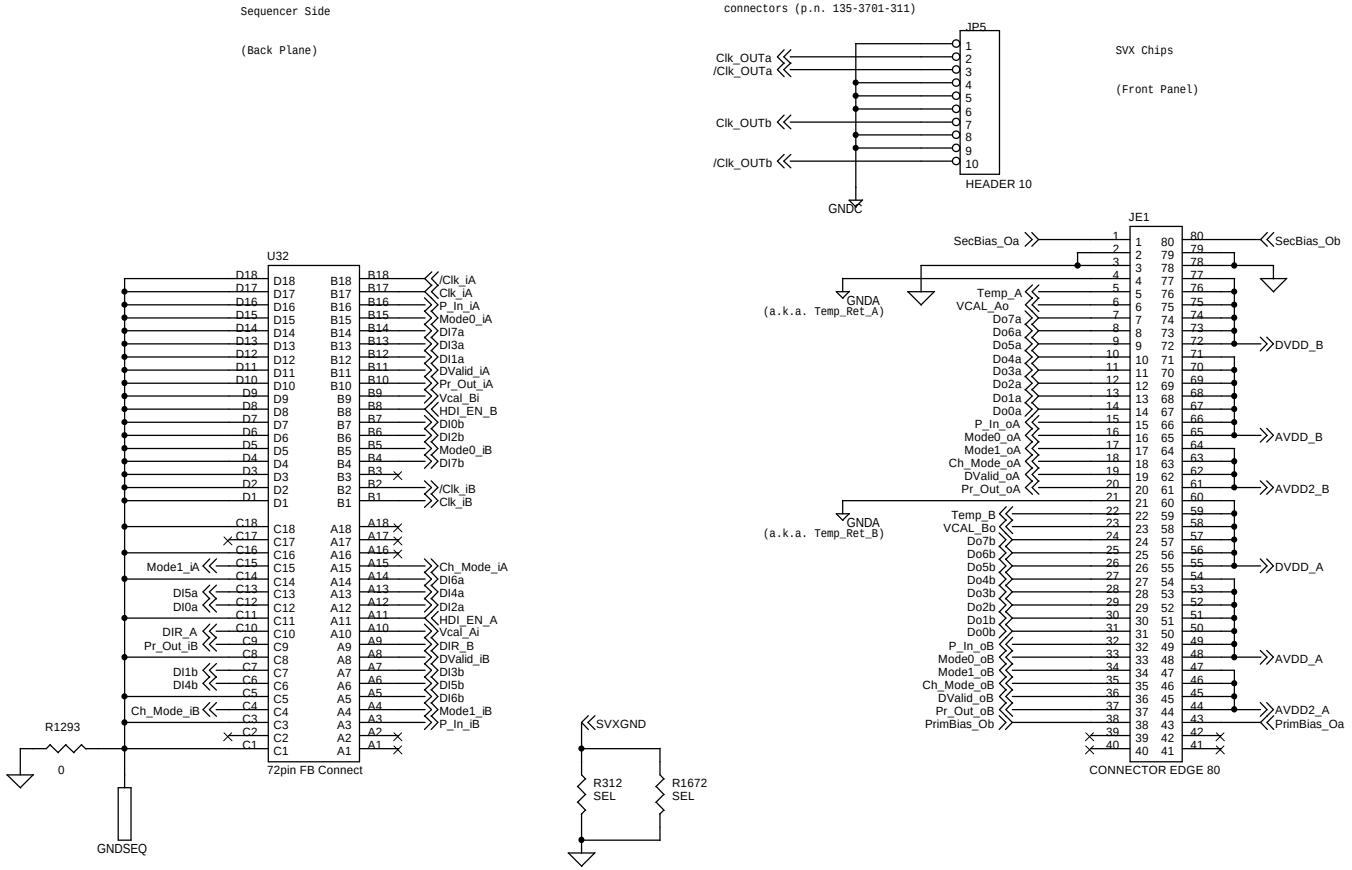

80-pin connector is to be a Mini-D,
3M part number N10280-52E2VC

The Follwing resistor values and
to be in the indicated package:

< 250	EIA 1206 1/8 W
250-900	EIA 0805 1/10 W
910	EIA 0603 1/16 W
1k	EIA 0805
1.1k	EIA 1206
> 1.2k	EIA 0603

Title	Channels A & B Connectors	
Size B	Document Number HEP008	Rev 3.3
Date: Tuesday, November 21, 2000	Sheet 27 of 98	

Sequencer Side

(Back Plane)

Clock signals go through the
10-contact header to a daughter
board with coax connectors.
Coax Connectors are Johnson MMCX
connectors (p.n. 135-3701-311)

SVX Chips

(Front Panel)

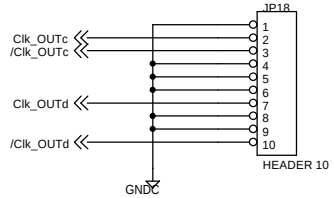

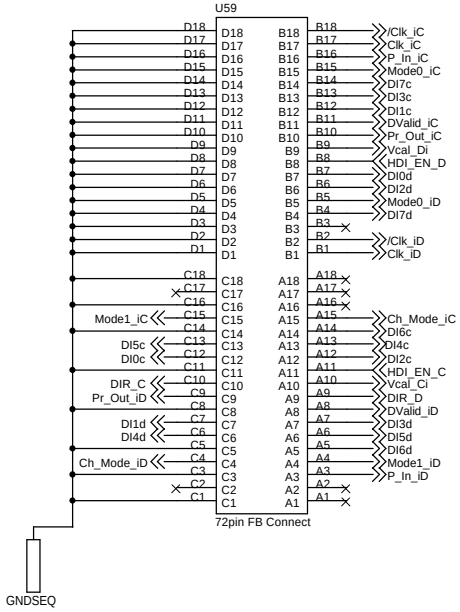

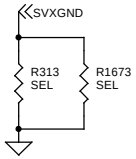

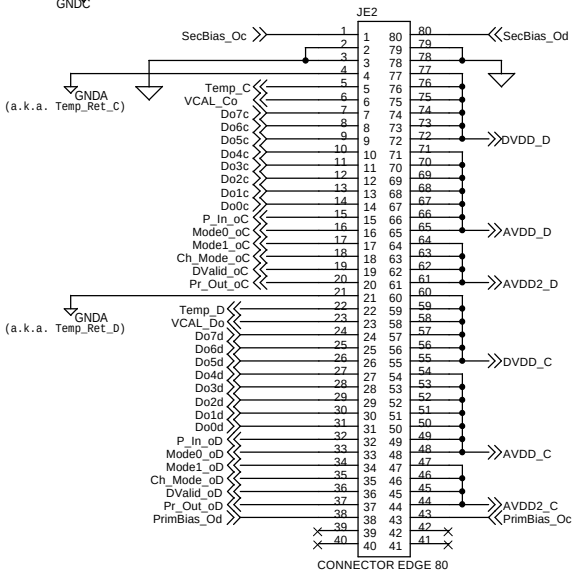

80-pin connector is to be a Mini-D,
3M part number N10280-52E2VC

The Follwing resistor values and
to be in the indicated package:

< 250	EIA 1206 1/8 W
250-900	EIA 0805 1/10 W
910	EIA 0603 1/16 W
1k	EIA 0805
1.1k	EIA 1206
> 1.2k	EIA 0603

Title	Channels C & D Connectors	
Size B	Document Number HEP008	Rev 3.3
Date: Tuesday, November 21, 2000	Sheet 28 of 98	

Sequencer Side

(Back Plane)

Clock signals go through the
10-contact header to a daughter
board with coax connectors.
Coax Connectors are Johnson MMCX
connectors (p.n. 135-3701-311)

SVX Chips

(Front Panel)

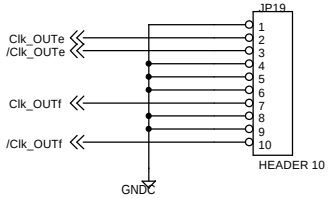

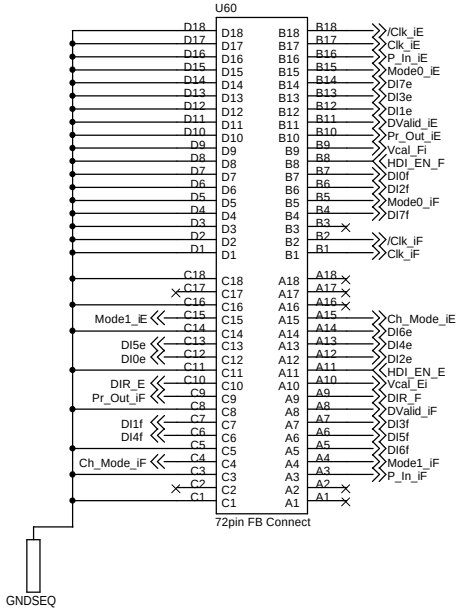

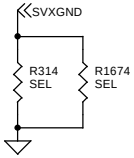

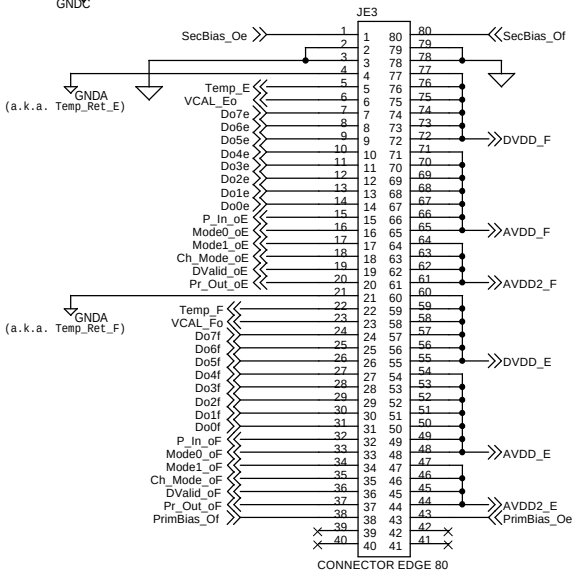

80-pin connector is to be a Mini-D,
3M part number N10280-52E2VC

The Follwing resistor values and
to be in the indicated package:

< 250	EIA 1206 1/8 W
250-900	EIA 0805 1/10 W
910	EIA 0603 1/16 W
1k	EIA 0805
1.1k	EIA 1206
> 1.2k	EIA 0603

Title	Channels E & F Connectors	
Size B	Document Number HEP008	Rev 3.3
Date: Tuesday, November 21, 2000	Sheet 29 of 98	

Sequencer Side

(Back Plane)

Clock signals go through the
10-contact header to a daughter
board with coax connectors.
Coax Connectors are Johnson MMCX
connectors (p.n. 135-3701-311)

SVX Chips

(Front Panel)

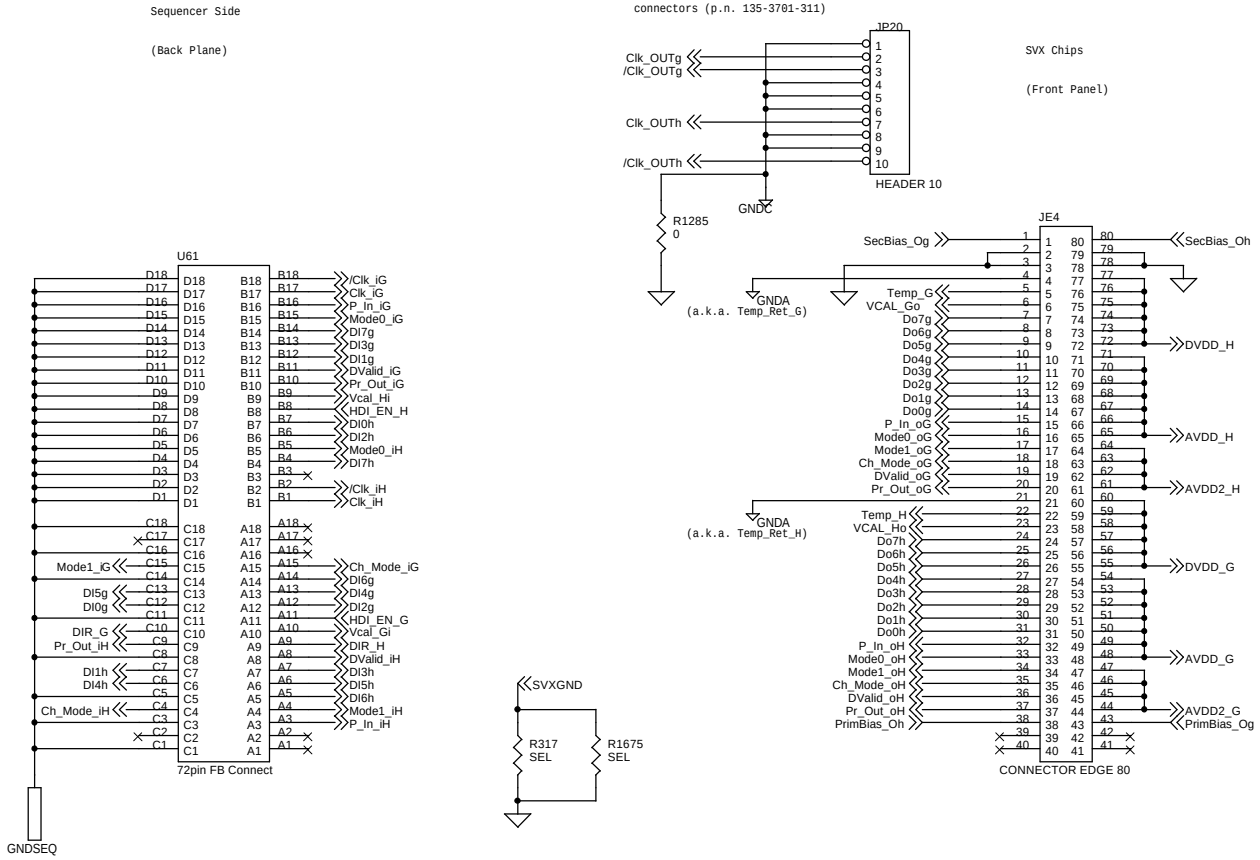

80-pin connector is to be a Mini-D,
3M part number N10280-52E2VC

The Follwing resistor values and
to be in the indicated package:

< 250	EIA 1206 1/8 W
250-900	EIA 0805 1/10 W
910	EIA 0603 1/16 W
1k	EIA 0805
1.1k	EIA 1206
> 1.2k	EIA 0603

Title	Channels G & H Connectors	
Size B	Document Number HEP008	Rev 3.3
Date: Tuesday, November 21, 2000	Sheet 30 of 98	

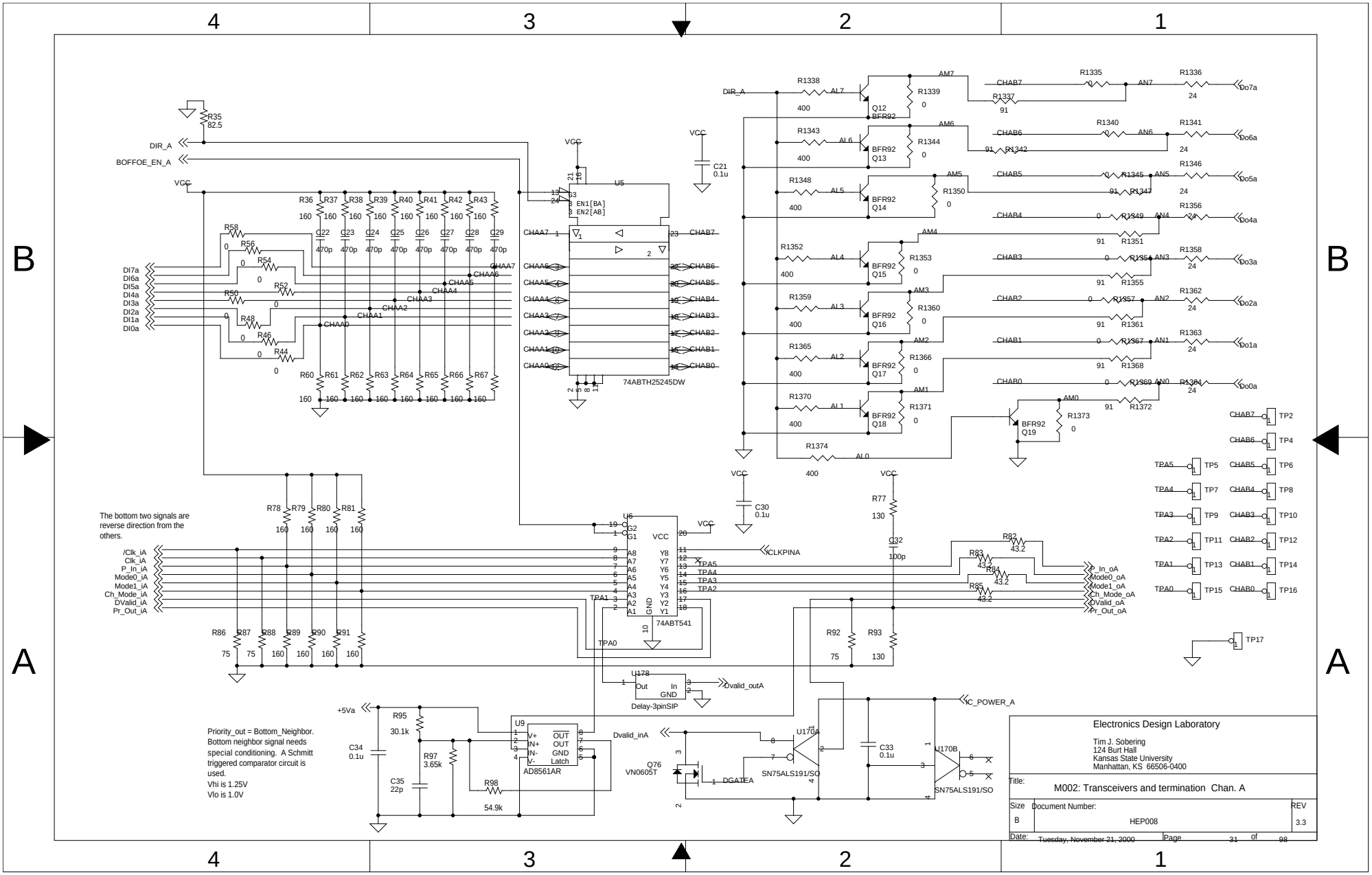
DIR_A
BOFFOE_EN_A
VCC
R35 82.5
U5
EN1[BA]
EN2[AB]
74ABTH25245DW
DI7a
DI6a
DI5a
DI4a
DI3a
DI2a
DI1a
DI0a
The bottom two signals are reverse direction from the others.
/Clk_iA
Clk_iA
P_In_iA
Mode0_iA
Mode1_iA
Ch_Mode_iA
DValid_iA
Pr_Out_iA
U6
74ABT541
CLKPINA
TPA5
TPA4
TPA3
TPA2
TPA1
TPA0
P_In_oA
Mode0_oA
Mode1_oA
Ch_Mode_oA
DValid_oA
Pr_Out_oA
U178
Delay-3pinSIP
Dvalid_outA
+5Va
U9
AD8561AR
Dvalid_inA
Q76
VN0605T
DGATEA
U170A
SN75ALS191/SO
U170B
SN75ALS191/SO
IC_POWER_A
Do7a
Do6a
Do5a
Do4a
Do3a
Do2a
Do1a
Do0a
Priority_out = Bottom_Neighbor. Bottom neighbor signal needs special conditioning. A Schmitt triggered comparator circuit is used.
Vhi is 1.25V
Vlo is 1.0V
Electronics Design Laboratory
Tim J. Sobering
124 Burt Hall
Kansas State University
Manhattan, KS 66506-0400
Title:
M002: Transceivers and termination Chan. A
Size B
Document Number:
HEP008
REV 3.3
Date: Tuesday, November 21, 2000
Page 31 of 98

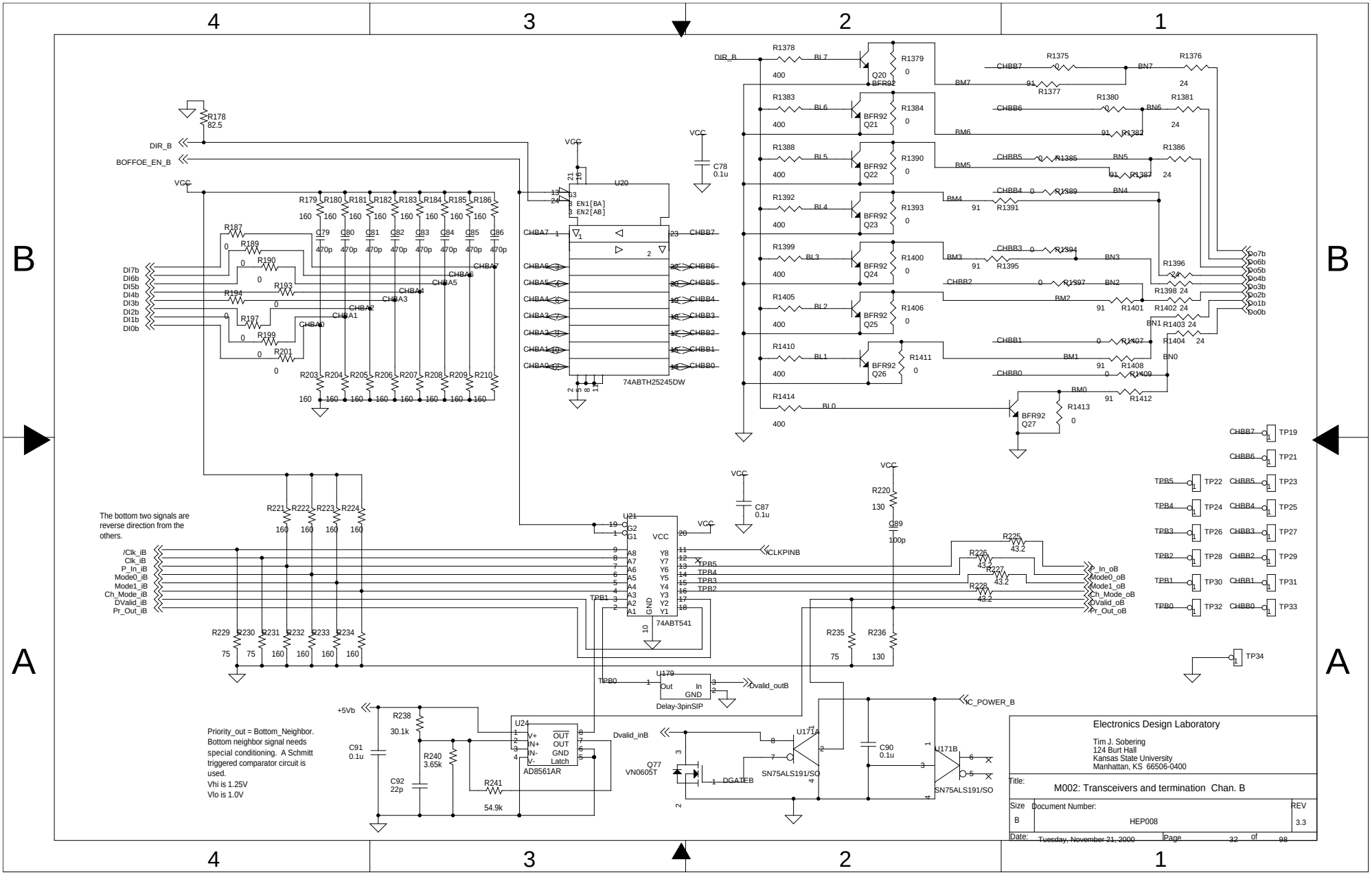
The bottom two signals are reverse direction from the others.
Priority_out = Bottom_Neighbor. Bottom neighbor signal needs special conditioning. A Schmitt triggered comparator circuit is used.
Vhi is 1.25V
Vlo is 1.0V
74ABTH25245DW
74ABT541
AD8561AR
Delay-3pinSIP
SN75ALS191/SO
Electronics Design Laboratory
Tim J. Sobering
124 Burt Hall
Kansas State University
Manhattan, KS 66506-0400
Title:
M002: Transceivers and termination Chan. B
Size B
Document Number:
HEP008
REV 3.3
Date: Tuesday, November 21, 2000
Page 32 of 98

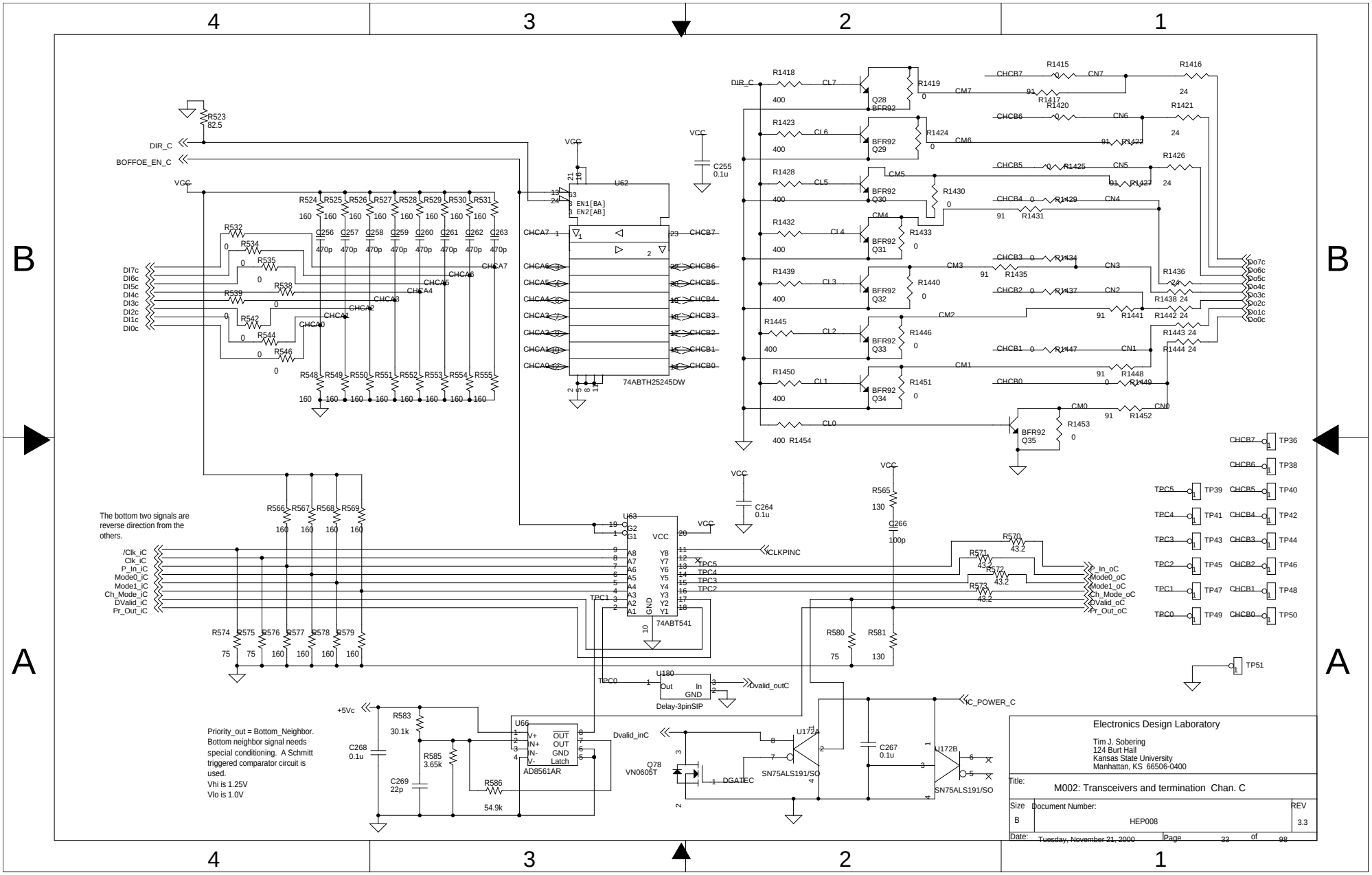
The bottom two signals are reverse direction from the others.
Priority_out = Bottom_Neighbor. Bottom neighbor signal needs special conditioning. A Schmitt triggered comparator circuit is used.
Vhi is 1.25V
Vlo is 1.0V
74ABTH25245DW
74ABT541
AD8561AR
SN75ALS191/SO
Delay-3pinSIP
Electronics Design Laboratory
Tim J. Sobering
124 Burt Hall
Kansas State University
Manhattan, KS 66506-0400
Title:
M002: Transceivers and termination Chan. C
Size
B
Document Number:
HEP008
REV
3.3
Date:
Tuesday, November 21, 2000
Page
33
of
98

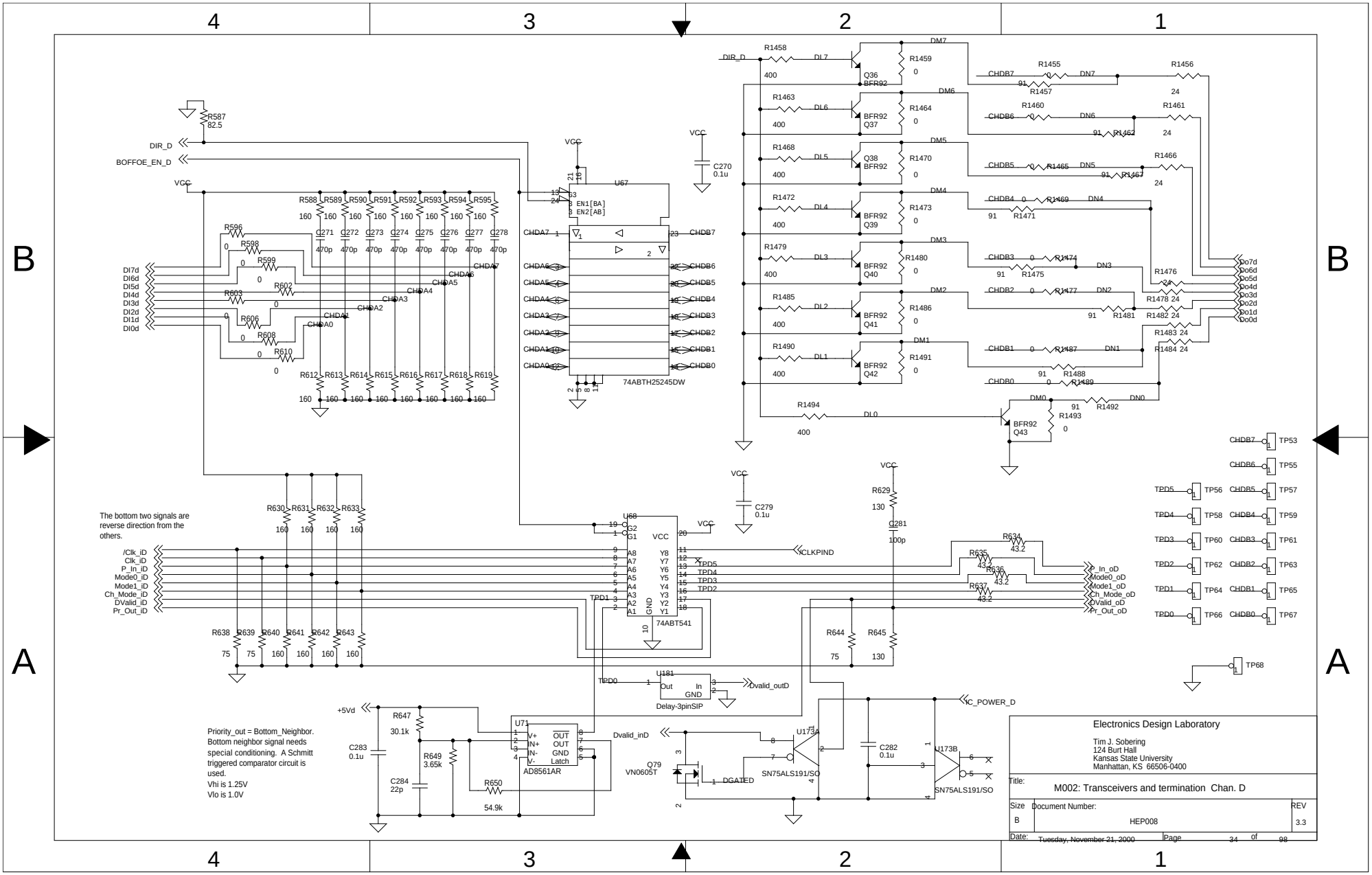
The bottom two signals are reverse direction from the others.
Priority_out = Bottom_Neighbor. Bottom neighbor signal needs special conditioning. A Schmitt triggered comparator circuit is used.
Vhi is 1.25V
Vlo is 1.0V
74ABTH25245DW
74ABT541
AD8561AR
Delay-3pinSIP
SN75ALS191/SO
VN0605T
Electronics Design Laboratory
Tim J. Sobering
124 Burt Hall
Kansas State University
Manhattan, KS 66506-0400
Title:
M002: Transceivers and termination Chan. D
Size B
Document Number:
HEP008
REV 3.3
Date: Tuesday, November 21, 2000
Page 34 of 98

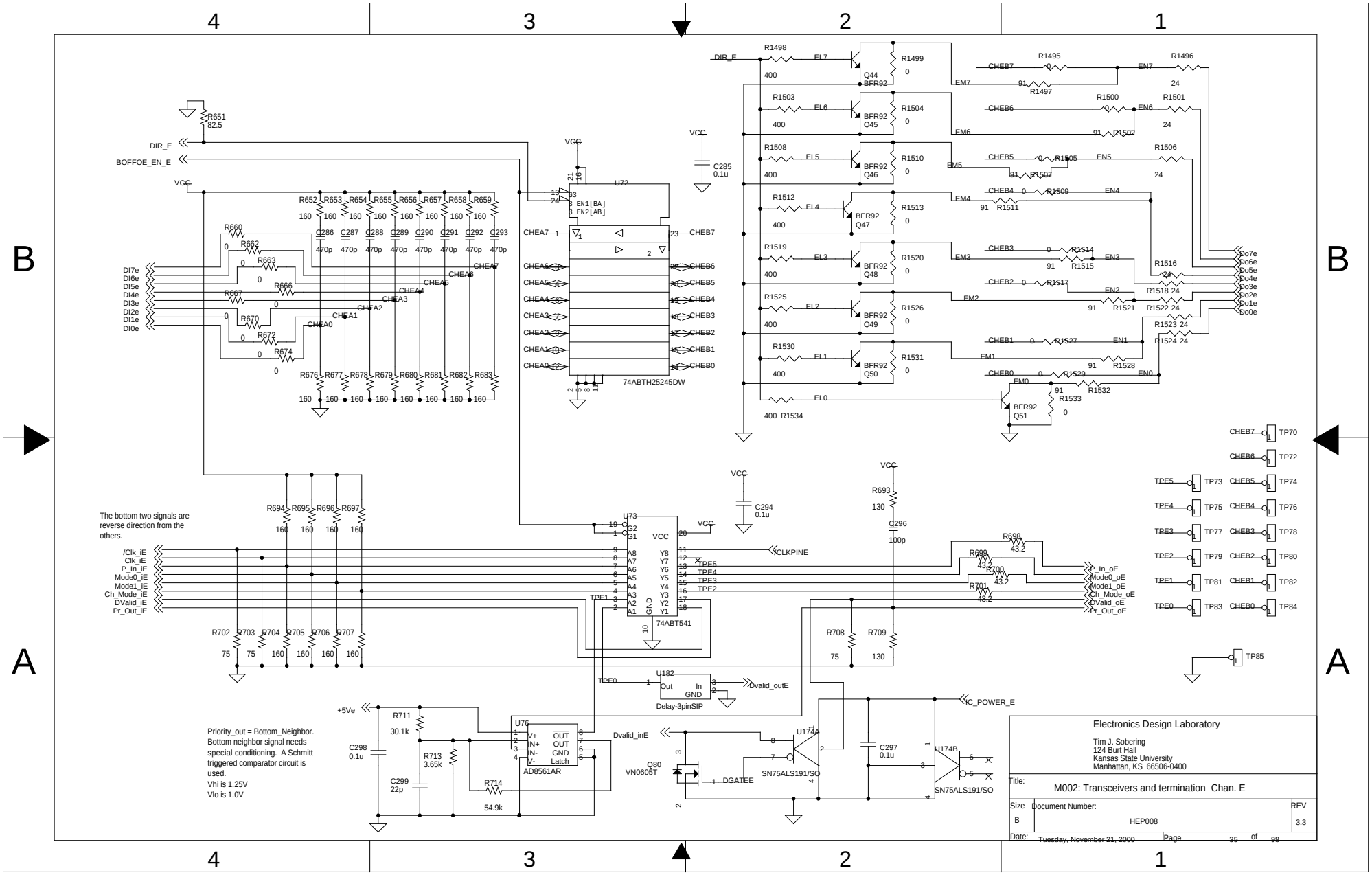
The bottom two signals are reverse direction from the others.
Priority_out = Bottom_Neighbor. Bottom neighbor signal needs special conditioning. A Schmitt triggered comparator circuit is used.
Vhi is 1.25V
Vlo is 1.0V
74ABTH25245DW
74ABT541
AD8561AR
SN75ALS191/SO
Delay-3pinSIP
Electronics Design Laboratory
Tim J. Sobering
124 Burt Hall
Kansas State University
Manhattan, KS 66506-0400
Title: M002: Transceivers and termination Chan. E
Size B
Document Number: HEP008
REV 3.3
Date: Tuesday, November 21, 2000
Page 35 of 98

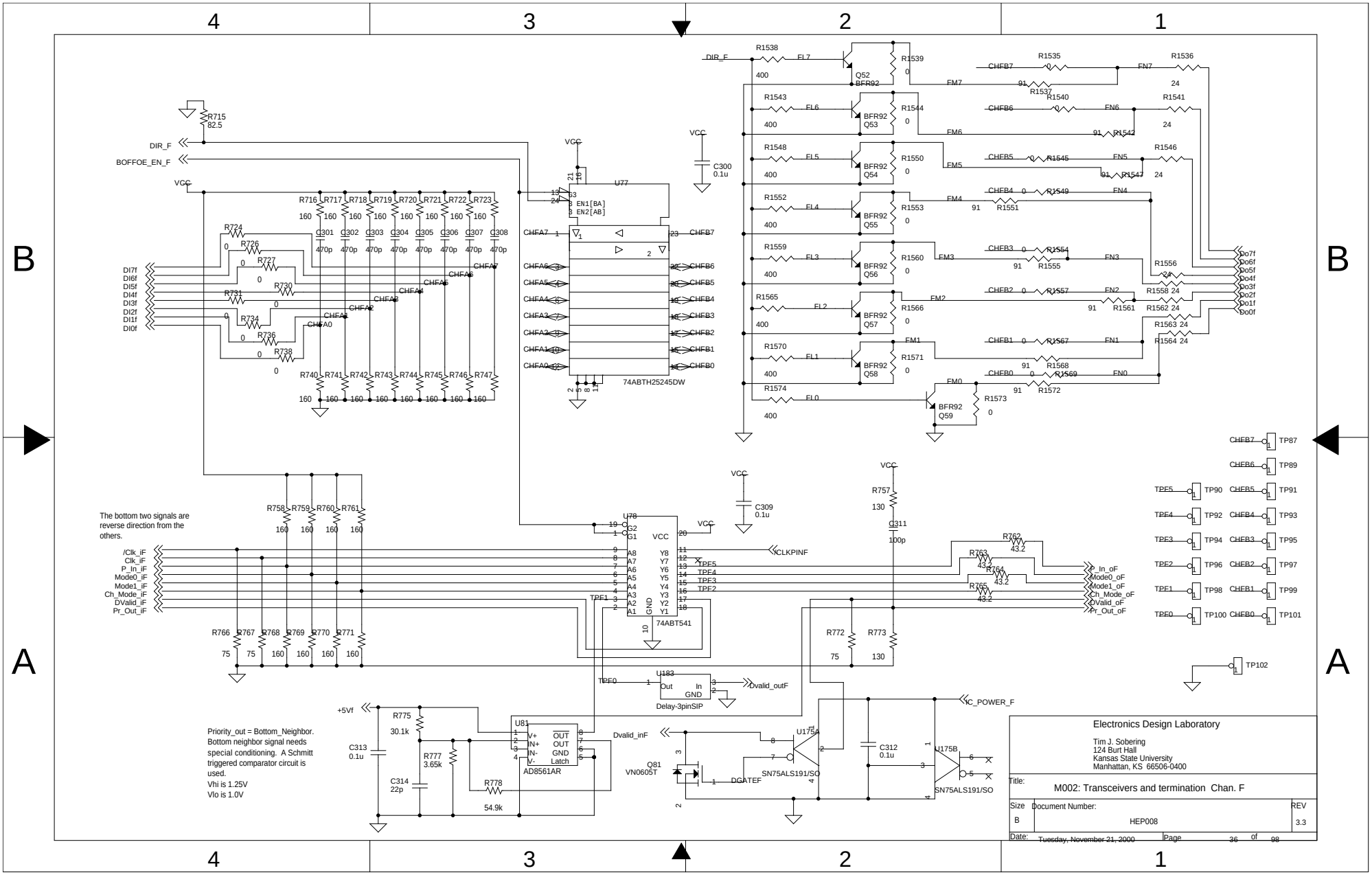
DIR_F
BOFFOE_EN_F
VCC
R715 82.5
U77
EN1[BA]
EN2[AB]
74ABTH25245DW
C300 0.1u
C309 0.1u
C311 100p
DI7f
DI6f
DI5f
DI4f
DI3f
DI2f
DI1f
DI0f
DO7f
DO6f
DO5f
DO4f
DO3f
DO2f
DO1f
DO0f
The bottom two signals are reverse direction from the others.
/Clk_iF
Clk_iF
P_In_iF
Mode0_iF
Mode1_iF
Ch_Mode_iF
DValid_iF
Pr_Out_iF
U78
74ABT541
CLKPINF
P_In_oF
Mode0_oF
Mode1_oF
Ch_Mode_oF
DValid_oF
Pr_Out_oF
U183
Delay-3pinSIP
Dvalid_outF
+5Vf
U81
AD8561AR
Dvalid_inF
Q81
VN0605T
DGATEF
U175A
U175B
SN75ALS191/SO
C_POWER_F
Priority_out = Bottom_Neighbor. Bottom neighbor signal needs special conditioning. A Schmitt triggered comparator circuit is used.
Vhi is 1.25V
Vlo is 1.0V
Electronics Design Laboratory
Tim J. Sobering
124 Burt Hall
Kansas State University
Manhattan, KS 66506-0400
Title:
M002: Transceivers and termination Chan. F
Size B
Document Number:
HEP008
REV 3.3
Date: Tuesday, November 21, 2000
Page 36 of 98

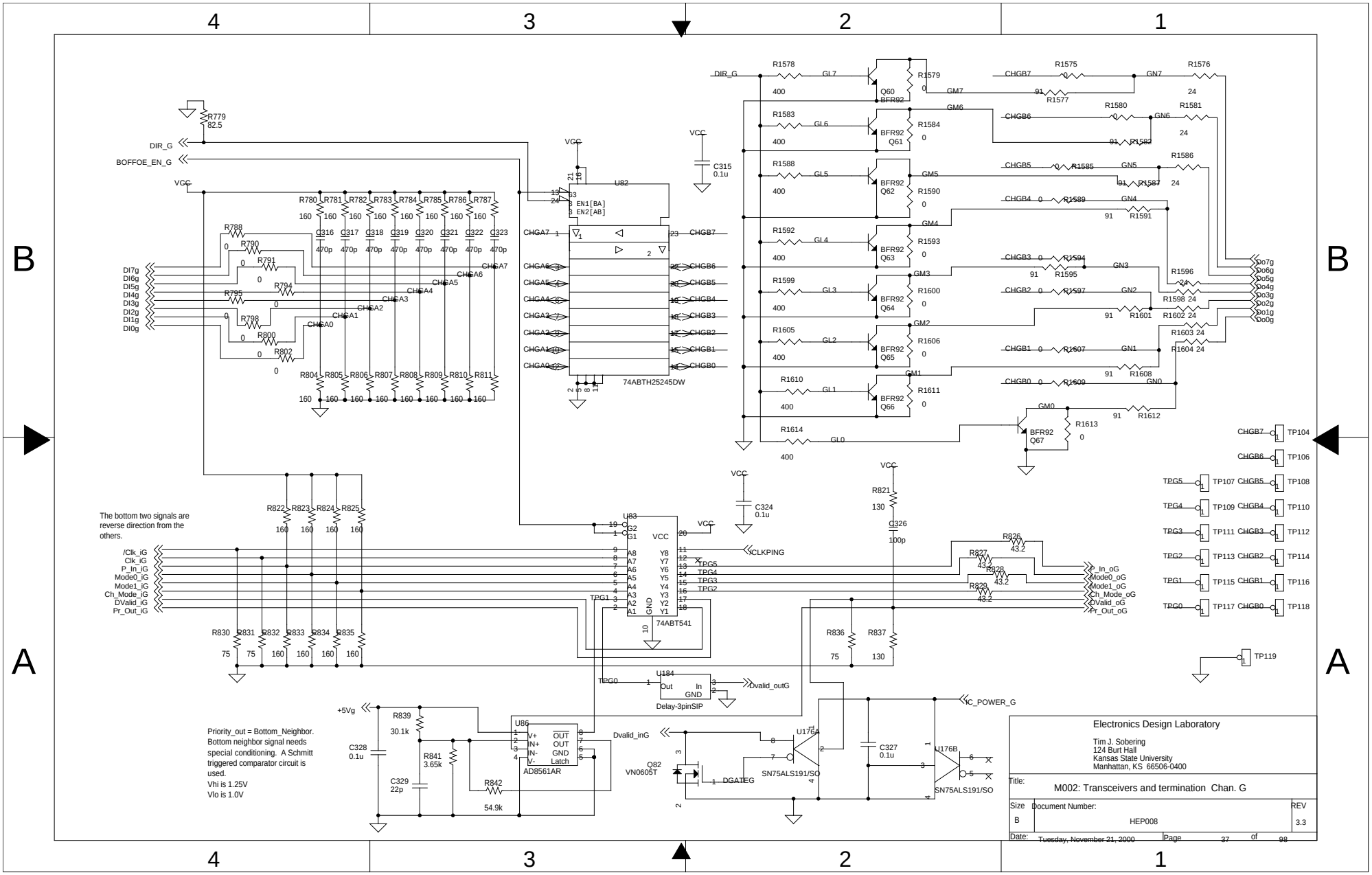
The bottom two signals are reverse direction from the others.
Priority_out = Bottom_Neighbor. Bottom neighbor signal needs special conditioning. A Schmitt triggered comparator circuit is used.
Vhi is 1.25V
Vlo is 1.0V
74ABTH25245DW
74ABT541
AD8561AR
SN75ALS191/SO
Delay-3pinSIP
Electronics Design Laboratory
Tim J. Sobering
124 Burt Hall
Kansas State University
Manhattan, KS 66506-0400
Title:
M002: Transceivers and termination Chan. G
Size
B
Document Number:
HEP008
REV
3.3
Date:
Tuesday, November 21, 2000
Page
37
of
98

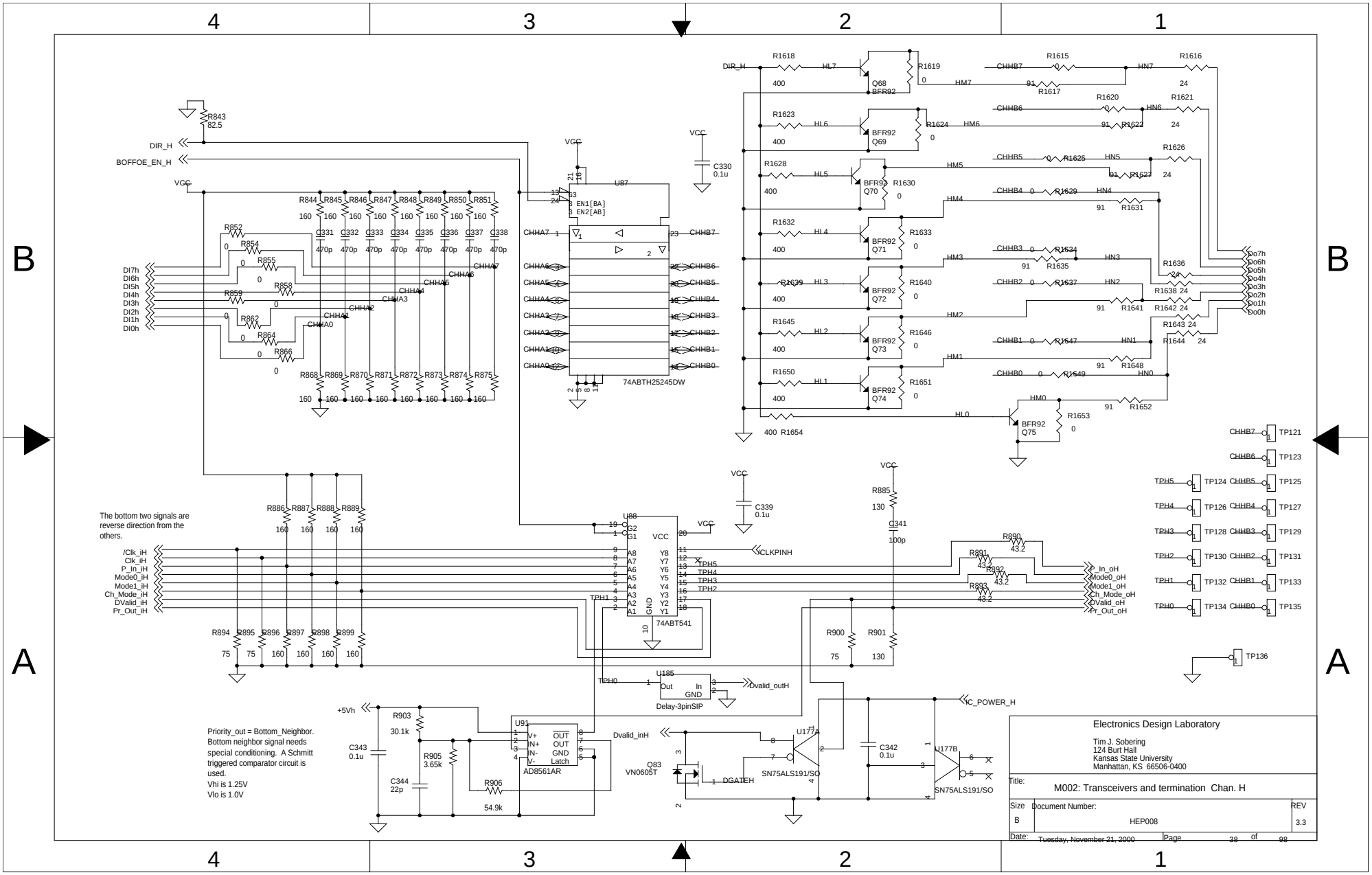
The bottom two signals are reverse direction from the others.
Priority_out = Bottom_Neighbor. Bottom neighbor signal needs special conditioning. A Schmitt triggered comparator circuit is used.
Vhi is 1.25V
Vlo is 1.0V
74ABTH25245DW
74ABT541
AD8561AR
SN75ALS191/SO
Delay-3pinSIP
Electronics Design Laboratory
Tim J. Sobering
124 Burt Hall
Kansas State University
Manhattan, KS 66506-0400
Title:
M002: Transceivers and termination Chan. H
Size
B
Document Number:
HEP008
REV
3.3
Date:
Tuesday, November 21, 2000
Page
38
of
98

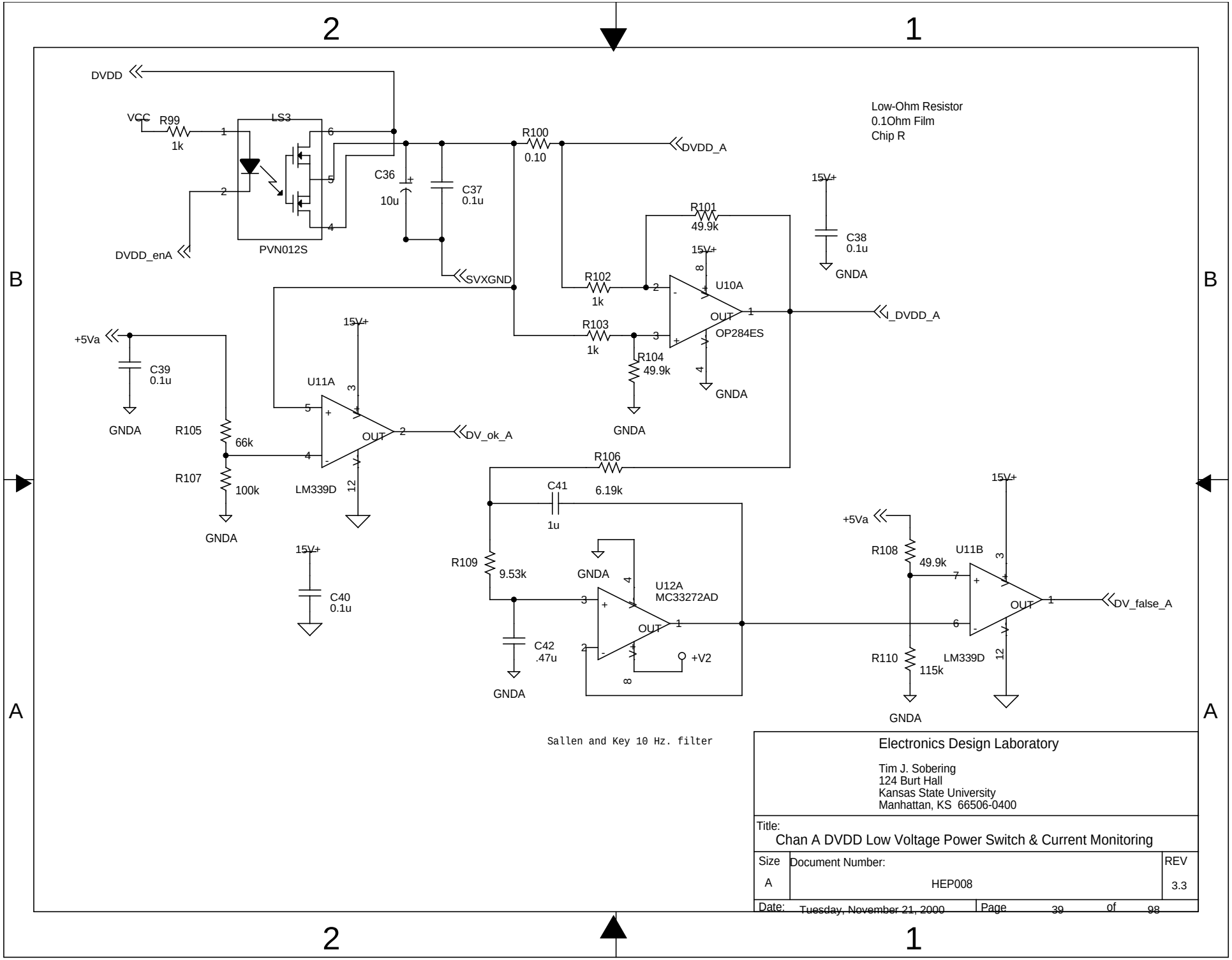
DVDD
VCC
R99
1k
LS3
PVN012S
DVDD_enA
C36
10u
C37
0.1u
R100
0.10
DVDD_A
SVXGND
Low-Ohm Resistor
0.1Ohm Film
Chip R
15V+
C38
0.1u
GNDA
R101
49.9k
R102
1k
R103
1k
R104
49.9k
U10A
OP284ES
OUT
I_DVDD_A
+5Va
C39
0.1u
U11A
LM339D
R105
66k
R107
100k
DV_ok_A
R106
6.19k
C41
1u
R109
9.53k
C40
0.1u
U12A
MC33272AD
C42
.47u
+V2
R108
49.9k
U11B
R110
115k
DV_false_A
Sallen and Key 10 Hz. filter
Electronics Design Laboratory
Tim J. Sobering
124 Burt Hall
Kansas State University
Manhattan, KS 66506-0400
Title:
Chan A DVDD Low Voltage Power Switch & Current Monitoring
Size
A
Document Number:
HEP008
REV
3.3
Date: Tuesday, November 21, 2000
Page 39 of 98

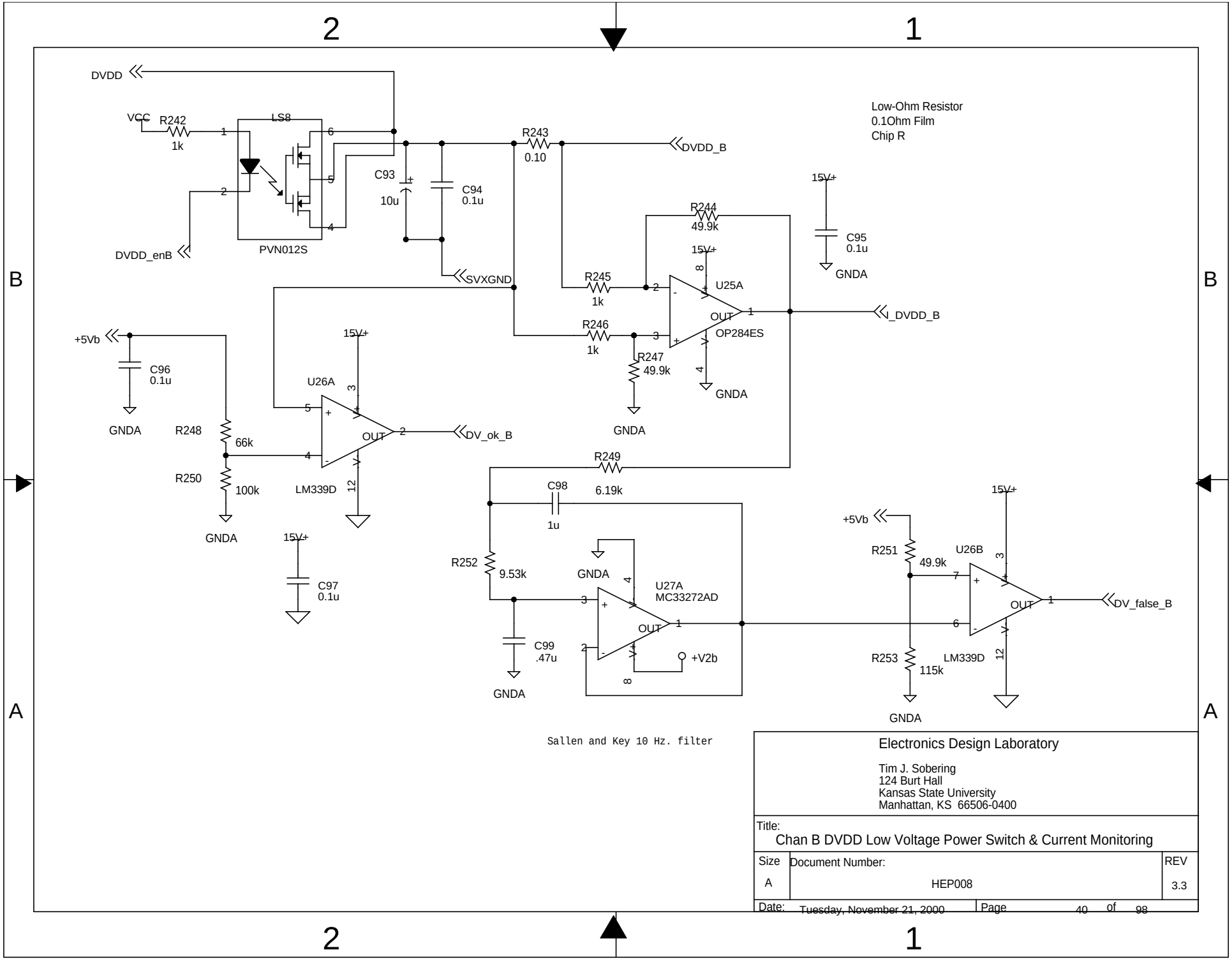
DVDD
VCC
R242
1k
LS8
PVN012S
DVDD_enB
C93
10u
C94
0.1u
R243
0.10
DVDD_B
SVXGND
Low-Ohm Resistor
0.1Ohm Film
Chip R
15V+
C95
0.1u
GNDA
R244
49.9k
R245
1k
R246
1k
R247
49.9k
U25A
OP284ES
OUT
I_DVDD_B
+5Vb
C96
0.1u
U26A
LM339D
R248
66k
R250
100k
DV_ok_B
R249
6.19k
C98
1u
R252
9.53k
C99
.47u
U27A
MC33272AD
+V2b
R251
49.9k
R253
115k
U26B
DV_false_B
Sallen and Key 10 Hz. filter
Electronics Design Laboratory
Tim J. Sobering
124 Burt Hall
Kansas State University
Manhattan, KS 66506-0400
Title:
Chan B DVDD Low Voltage Power Switch & Current Monitoring
Size
A
Document Number:
HEP008
REV
3.3
Date: Tuesday, November 21, 2000
Page 40 of 98

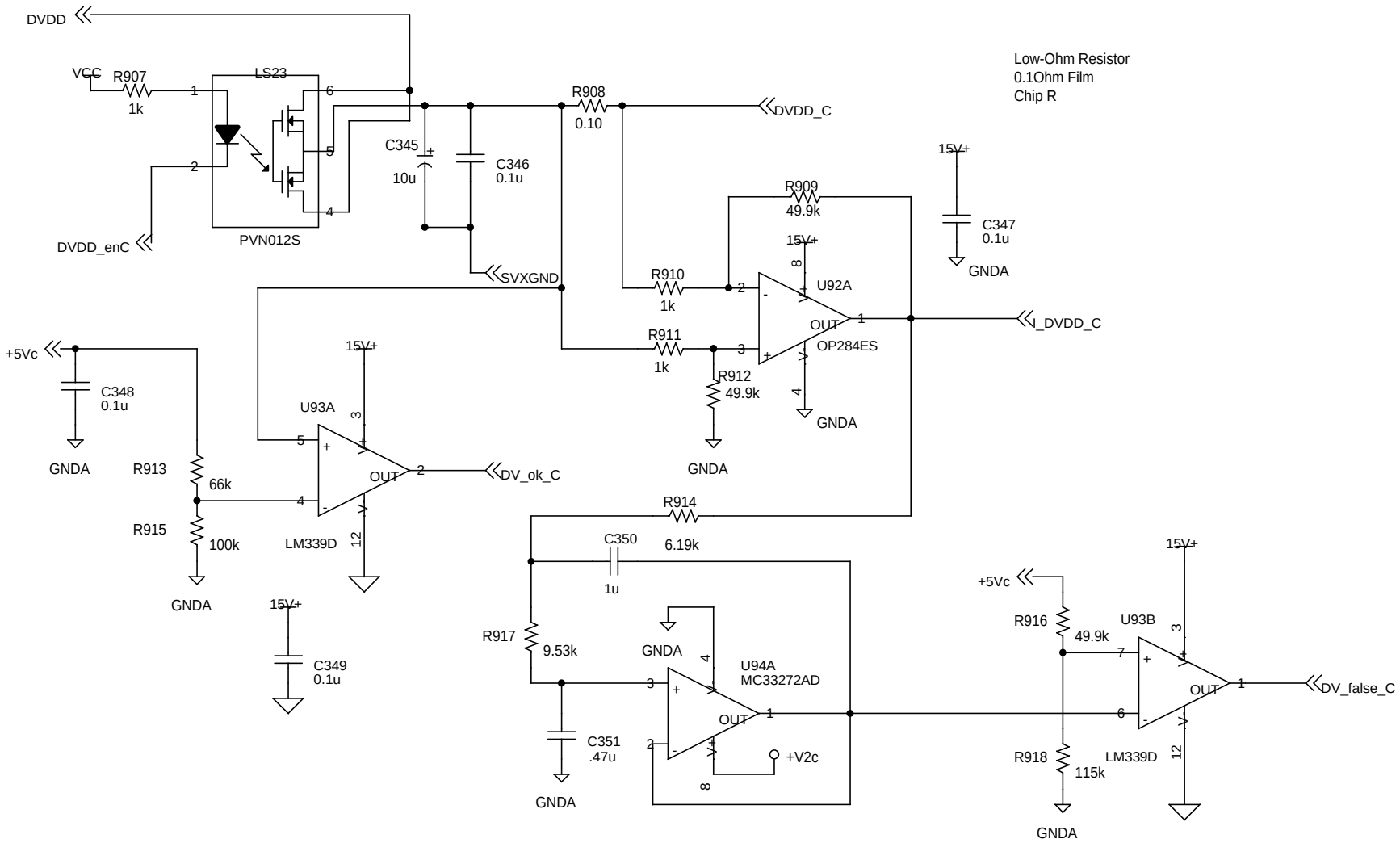

Electronics Design Laboratory

Tim J. Sobering
124 Burt Hall
Kansas State University
Manhattan, KS 66506-0400

Title: Chan C DVDD Low Voltage Power Switch & Current Monitoring

Size	Document Number:	REV
A	HEP008	3.3

Date: Tuesday, November 21, 2000 Page 41 of 98

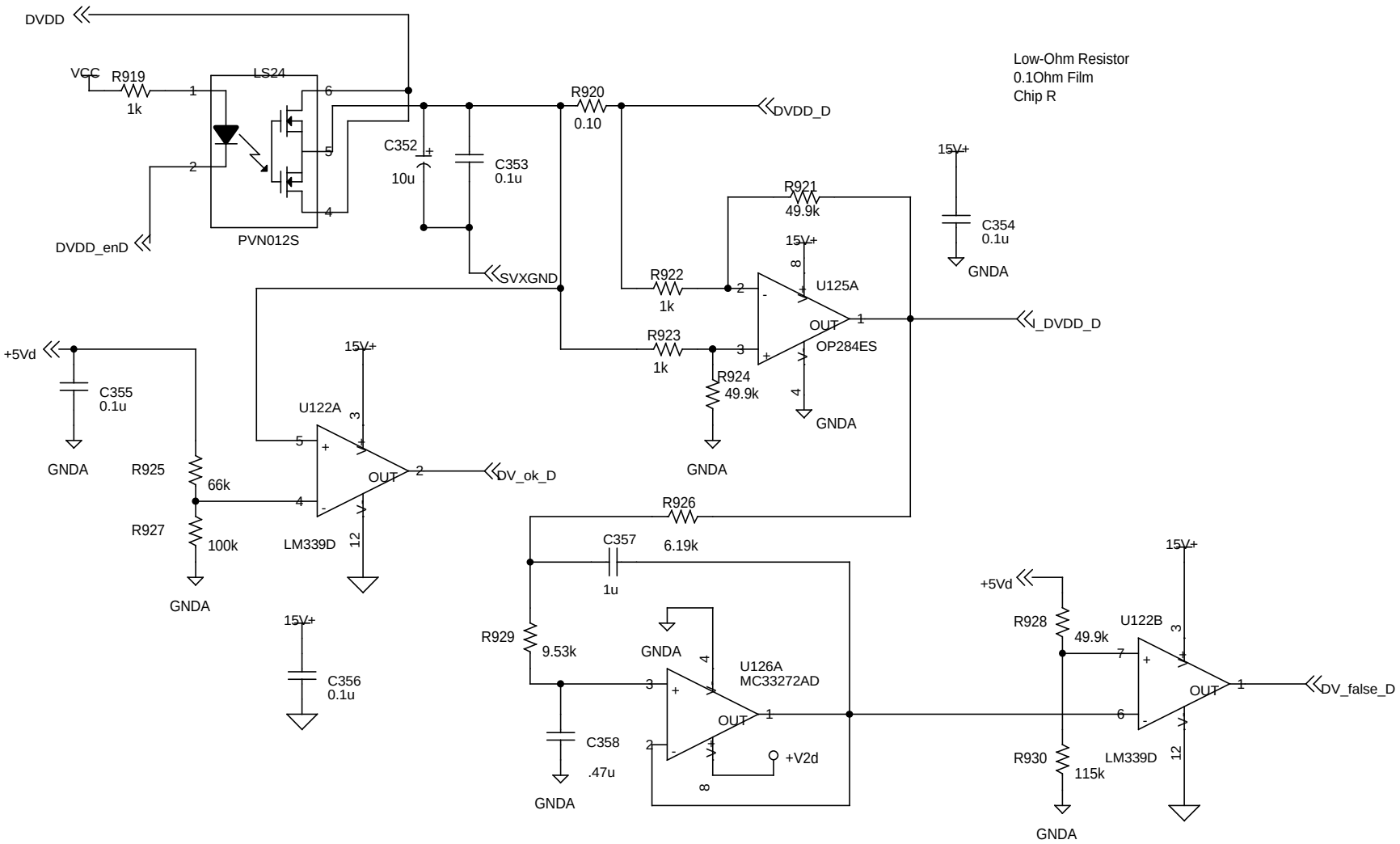

Sallen and Key 10 Hz. filter

Electronics Design Laboratory

Tim J. Sobering
124 Burt Hall
Kansas State University
Manhattan, KS 66506-0400

Title: Chan D DVDD Low Voltage Power Switch & Current Monitoring

Size	Document Number:	REV
A	HEP008	3.3

Date: Tuesday, November 21, 2000 Page 42 of 98

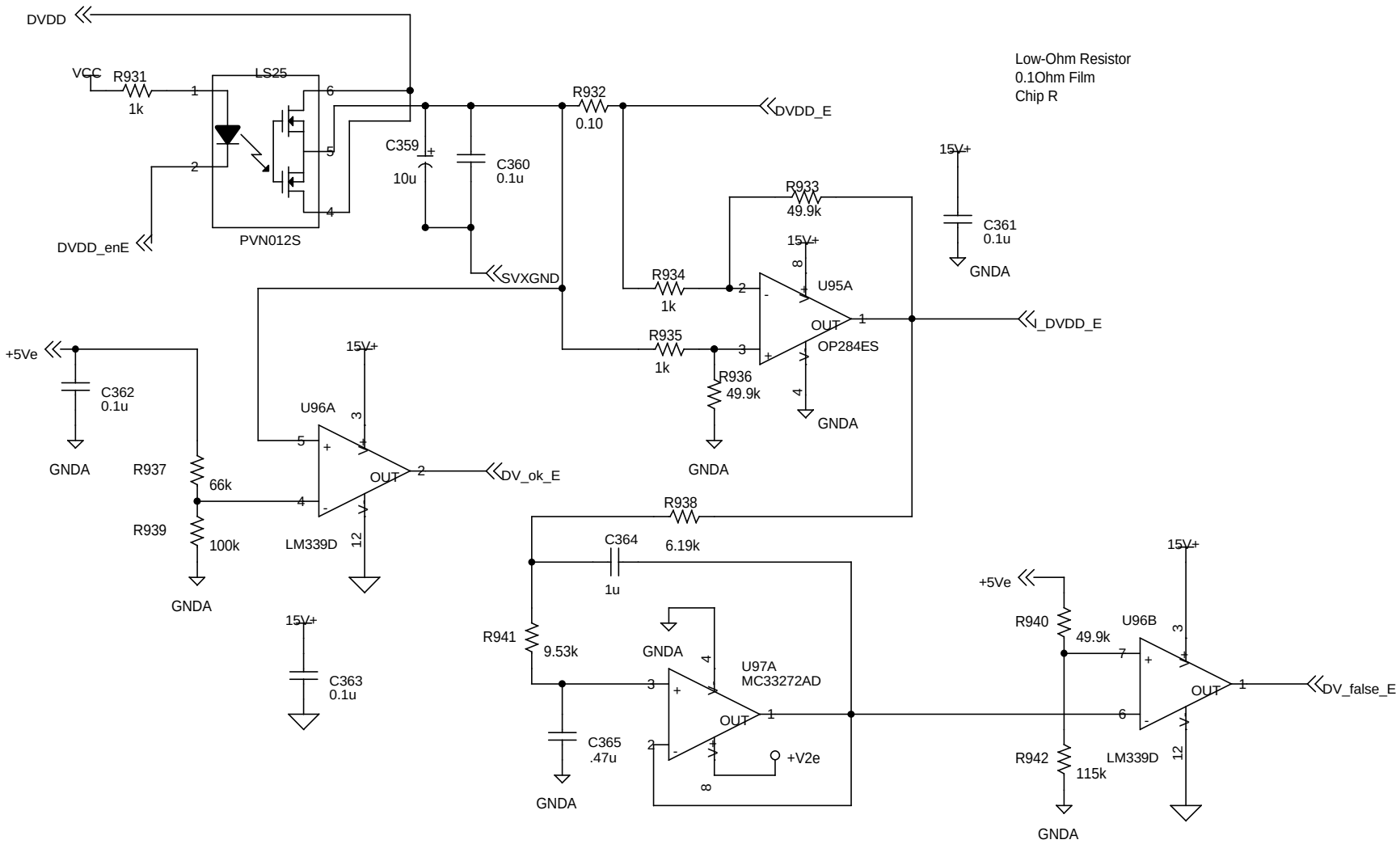

Sallen and Key 10 Hz. filter

Electronics Design Laboratory

Tim J. Sobering
124 Burt Hall
Kansas State University
Manhattan, KS 66506-0400

Title: Chan E DVDD Low Voltage Power Switch & Current Monitoring

Size	Document Number:	REV
A	HEP008	3.3

Date: Tuesday, November 21, 2000 | Page 43 of 98

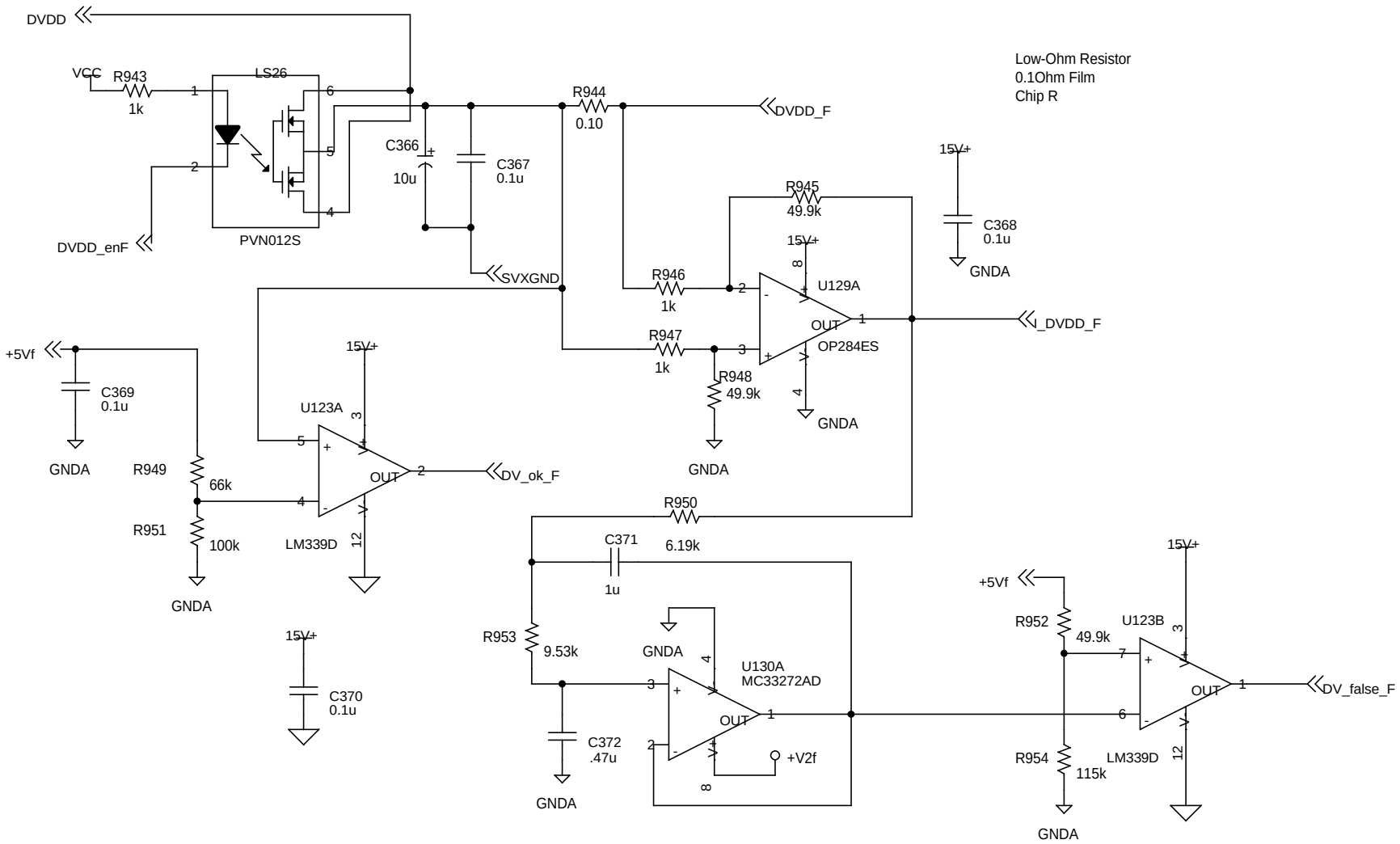

Low-Ohm Resistor
0.1Ohm Film
Chip R

Sallen and Key 10 Hz. filter

Electronics Design Laboratory

Tim J. Sobering
124 Burt Hall
Kansas State University
Manhattan, KS 66506-0400

Title:
Chan F DVDD Low Voltage Power Switch & Current Monitoring

Size	Document Number:	REV
A	HEP008	3.3

Date: Tuesday, November 21, 2000 Page 44 of 98

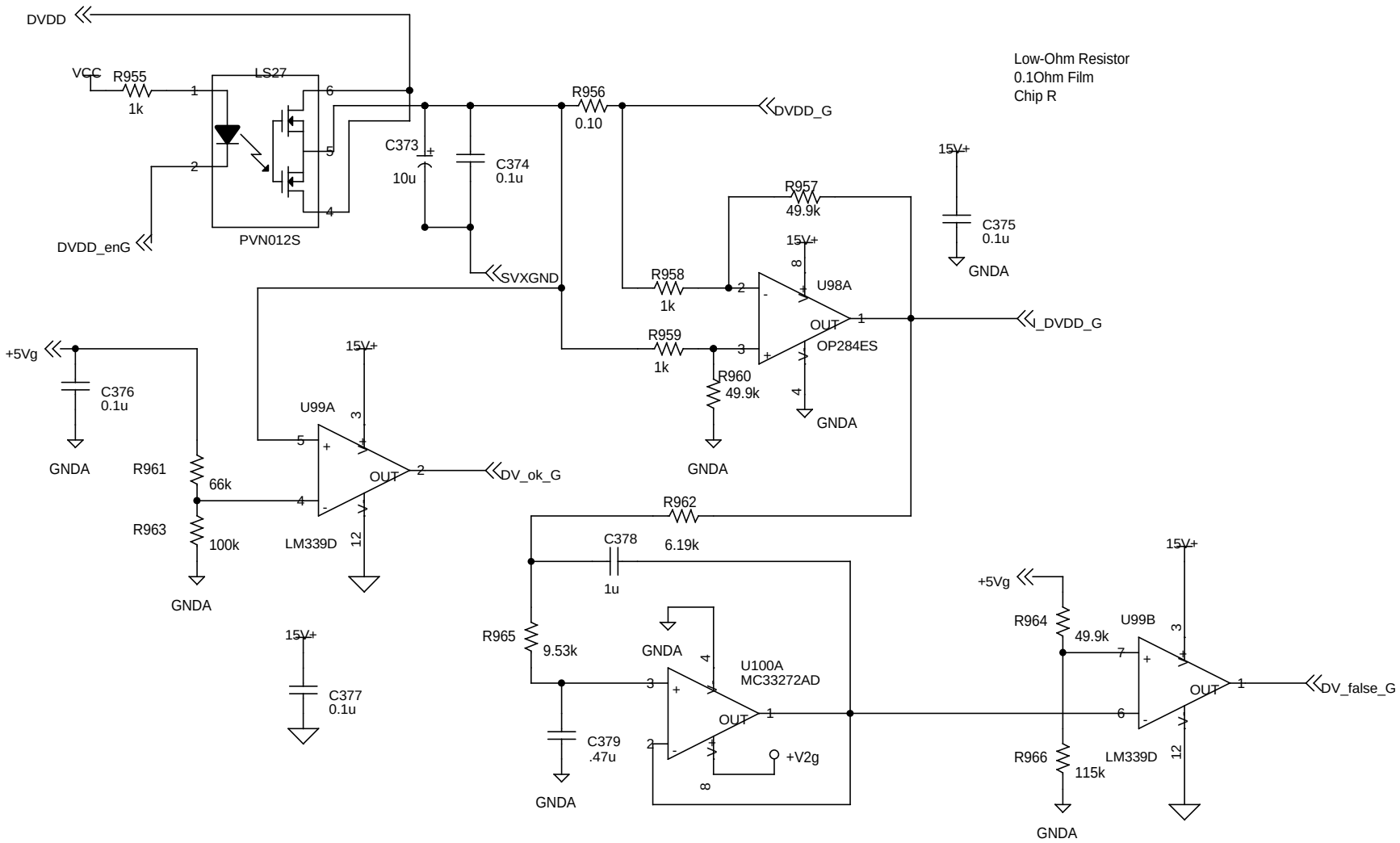

Sallen and Key 10 Hz. filter

Electronics Design Laboratory

Tim J. Sobering
124 Burt Hall
Kansas State University
Manhattan, KS 66506-0400

Title: Chan G DVDD Low Voltage Power Switch & Current Monitoring

Size	Document Number:	REV
A	HEP008	3.3

Date: Tuesday, November 21, 2000 Page 45 of 98

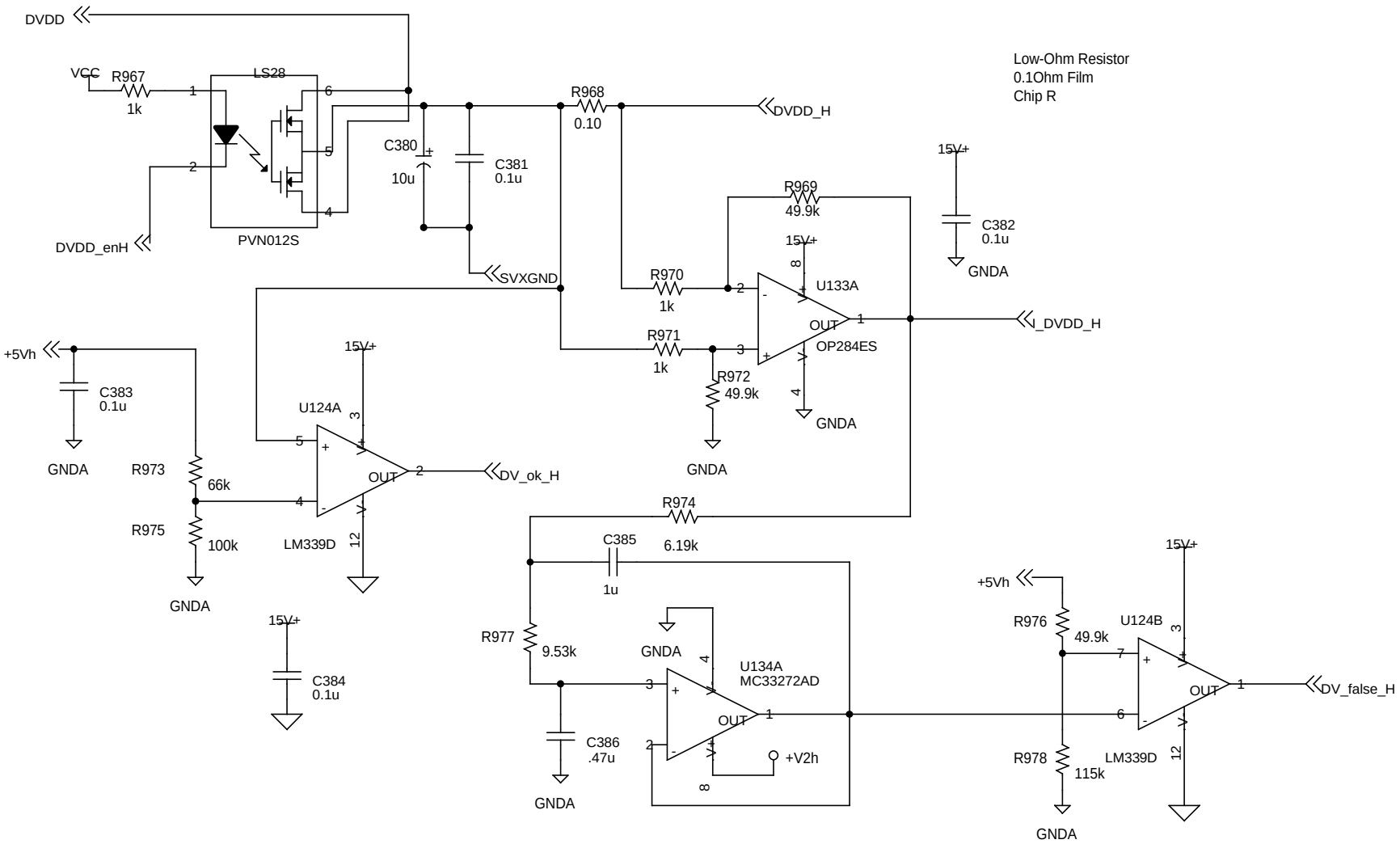

Electronics Design Laboratory

Tim J. Sobering
124 Burt Hall
Kansas State University
Manhattan, KS 66506-0400

Title: Chan H DVDD Low Voltage Power Switch & Current Monitoring

Size	Document Number:	REV
A	HEP008	3.3

Date: Tuesday, November 21, 2000 Page 46 of 98

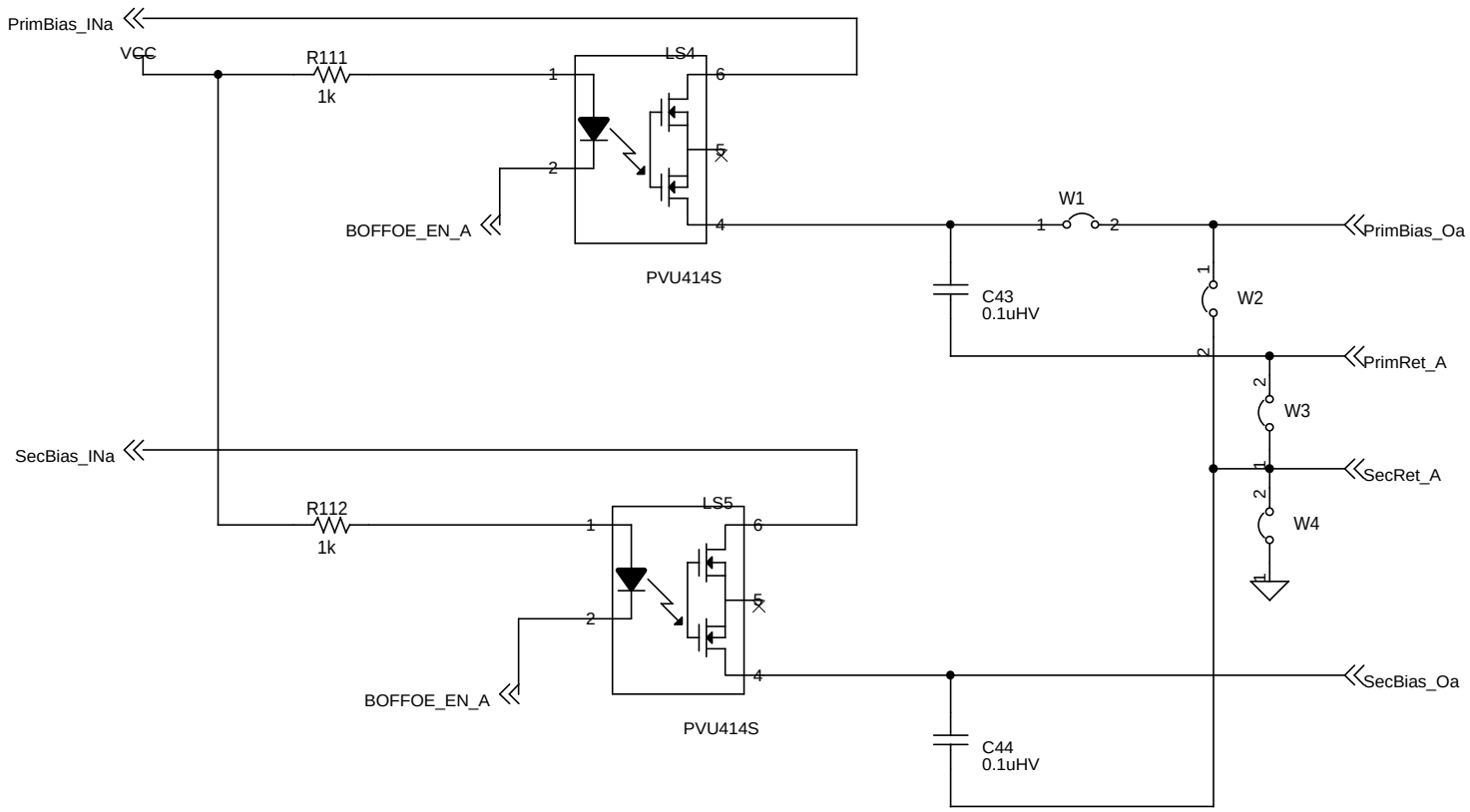

Electronics Design Laboratory

Tim J. Sobering
124 Burt Hall
Kansas State University
Manhattan, KS 66506-0400

Title: High Voltage Power Switching

Size	Document Number:	REV
A	HEP008	3.3

Date: Tuesday, November 21, 2000 Page 47 of 98

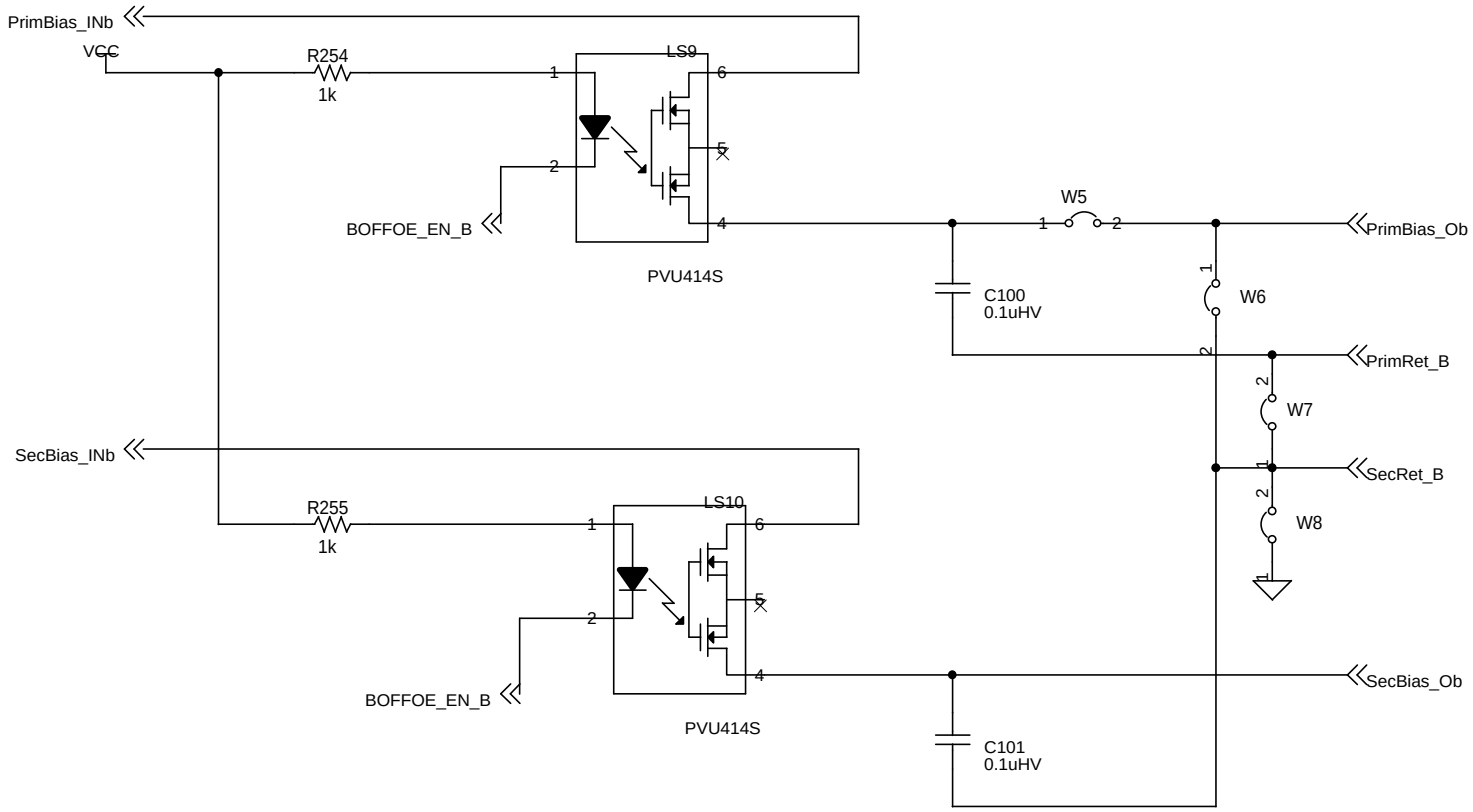

Electronics Design Laboratory

Tim J. Sobering
124 Burt Hall
Kansas State University
Manhattan, KS 66506-0400

Title: High Voltage Power Switching

Size	Document Number:	REV
A	HEP008	3.3

Date: Tuesday, November 21, 2000 Page 48 of 98

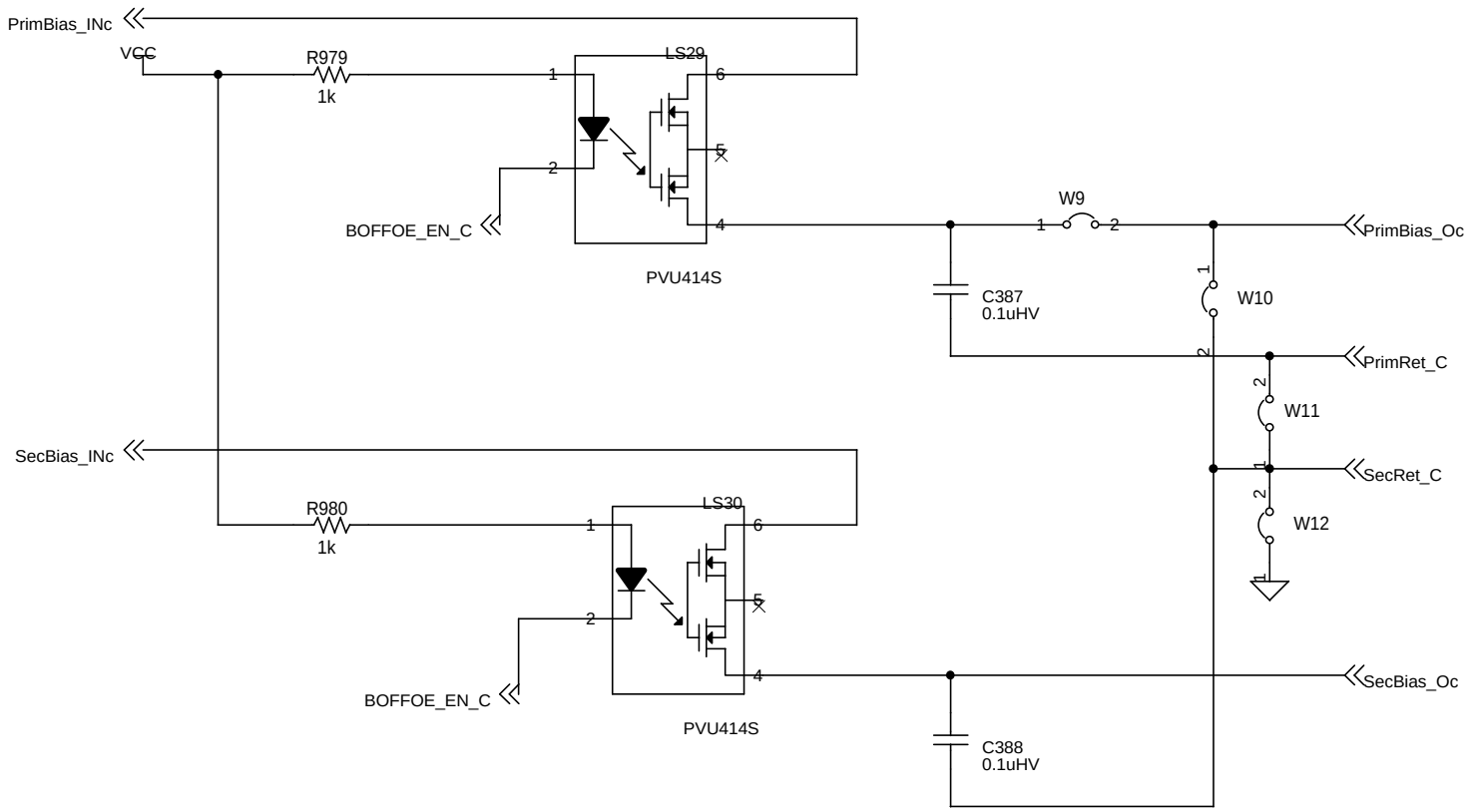

Electronics Design Laboratory

Tim J. Sobering
124 Burt Hall
Kansas State University
Manhattan, KS 66506-0400

Title: High Voltage Power Switching

Size	Document Number:	REV
A	HEP008	3.3

Date: Tuesday, November 21, 2000 Page 49 of 98

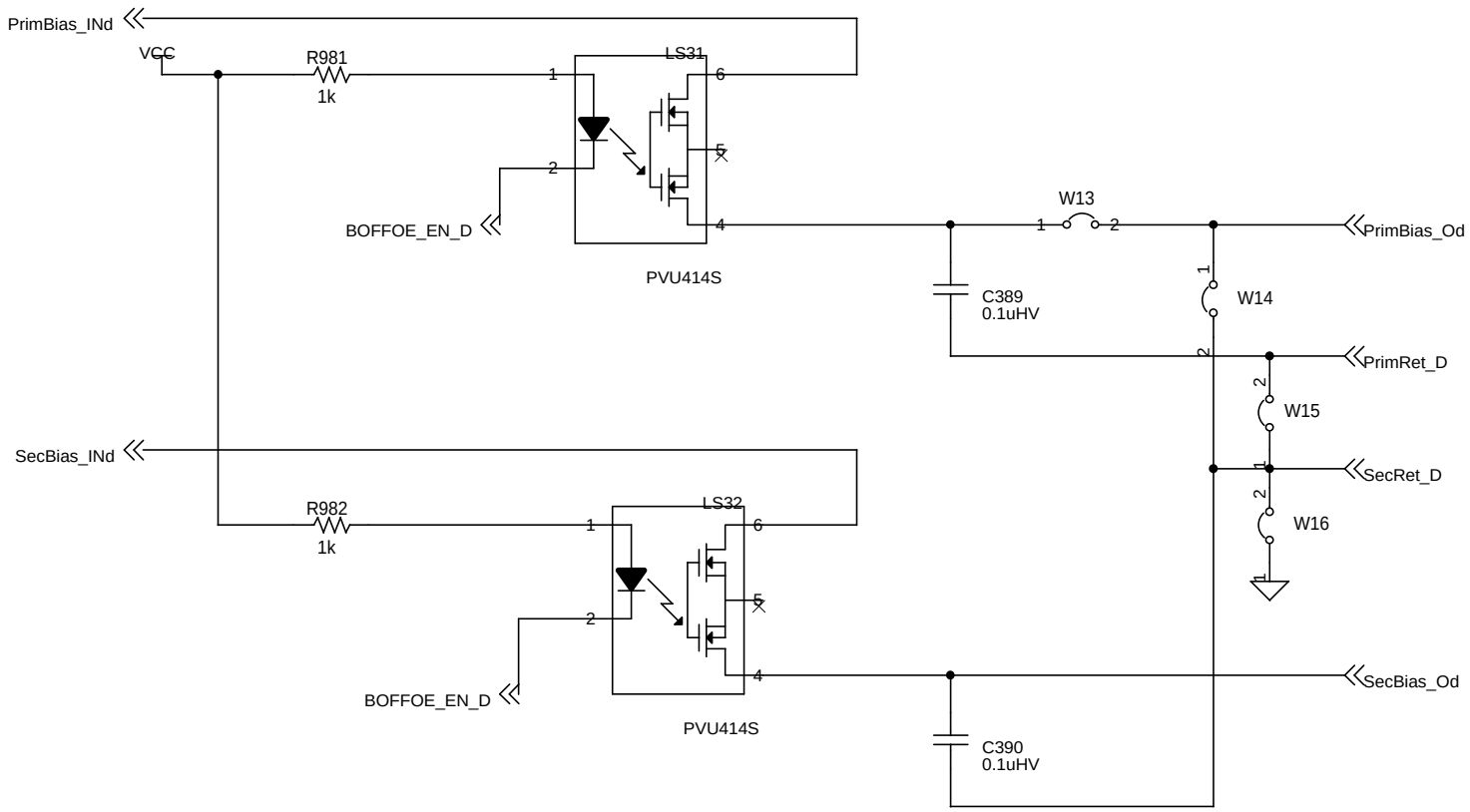

Electronics Design Laboratory

Tim J. Sobering
124 Burt Hall
Kansas State University
Manhattan, KS 66506-0400

Title: High Voltage Power Switching

Size	Document Number:	REV
A	HEP008	3.3

Date: Tuesday, November 21, 2000 | Page 50 of 98

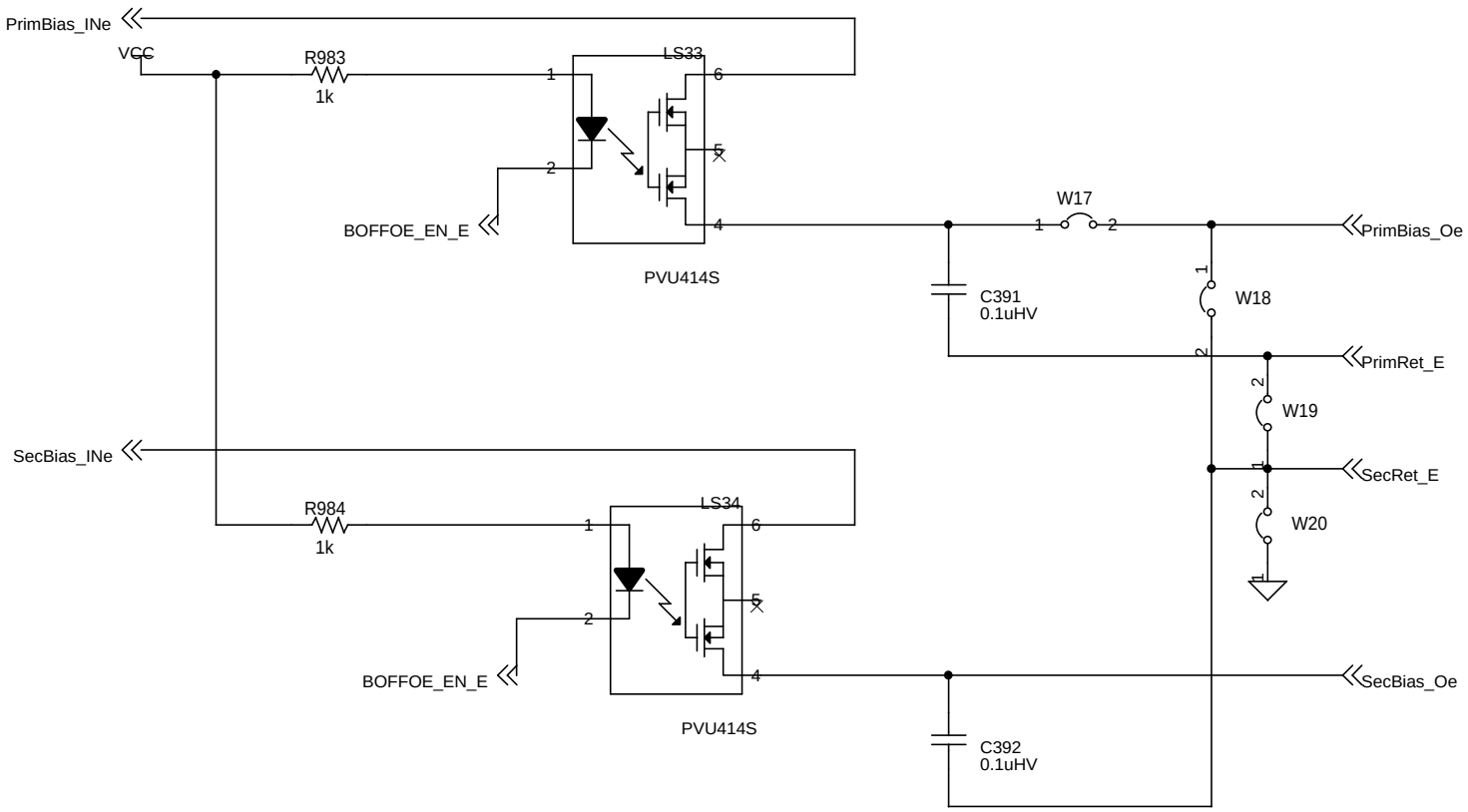

Electronics Design Laboratory

Tim J. Sobering
124 Burt Hall
Kansas State University
Manhattan, KS 66506-0400

Title: High Voltage Power Switching

Size	Document Number:	REV
A	HEP008	3.3

Date: Tuesday, November 21, 2000 Page 51 of 98

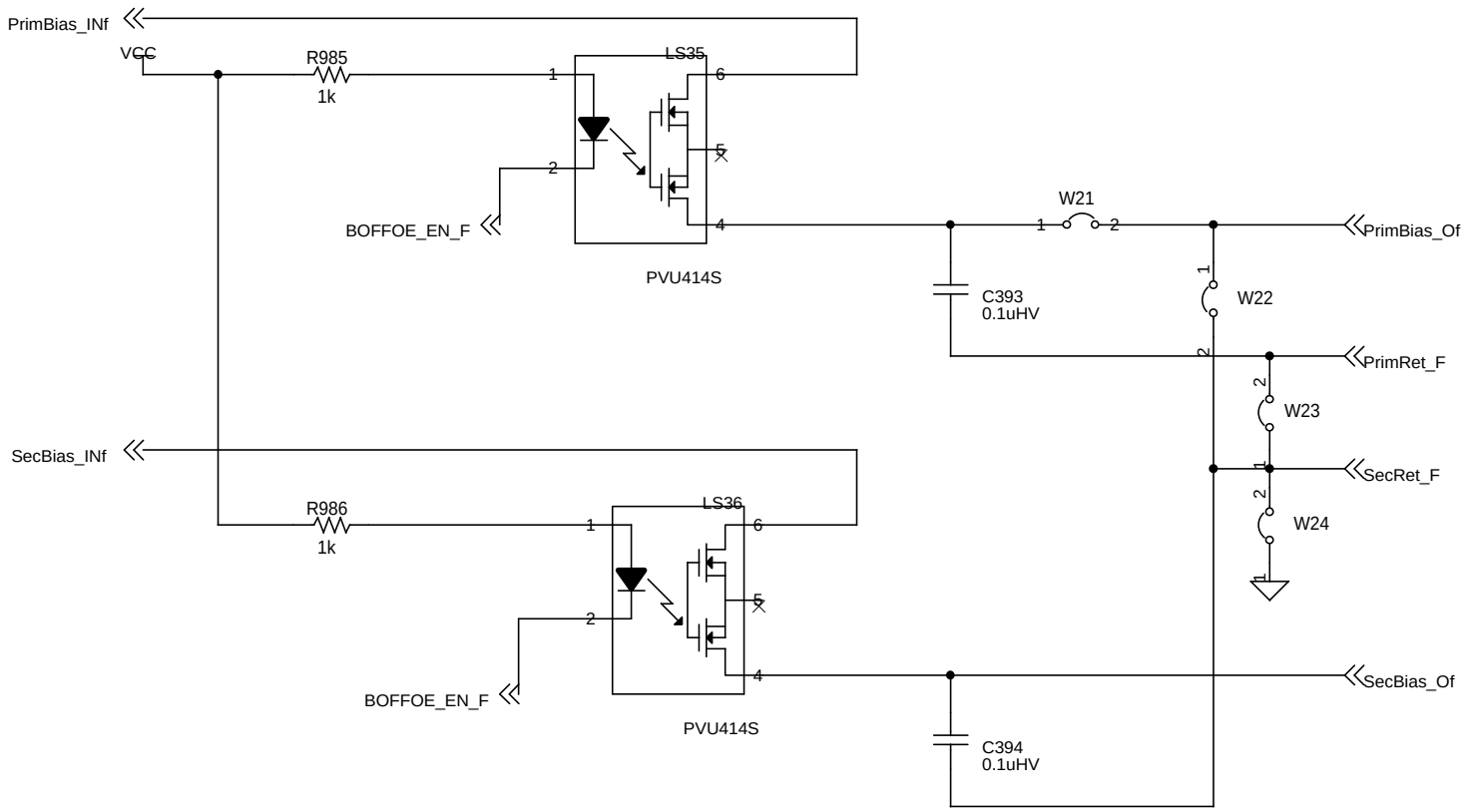

Electronics Design Laboratory

Tim J. Sobering
124 Burt Hall
Kansas State University
Manhattan, KS 66506-0400

Title: High Voltage Power Switching

Size	Document Number:	REV
A	HEP008	3.3

Date: Tuesday, November 21, 2000 | Page 52 of 98

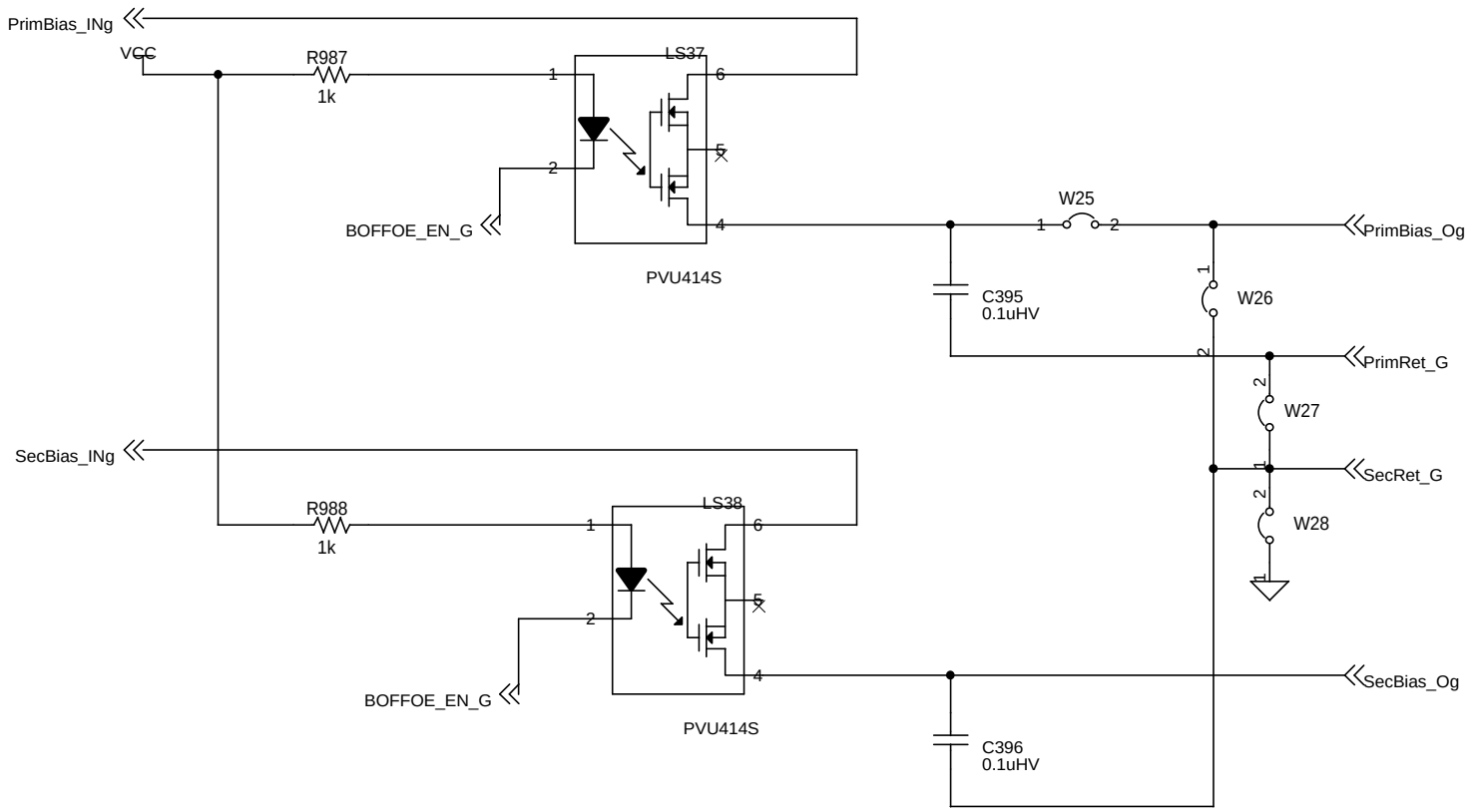

Electronics Design Laboratory

Tim J. Sobering
124 Burt Hall
Kansas State University
Manhattan, KS 66506-0400

Title: High Voltage Power Switching

Size	Document Number:	REV
A	HEP008	3.3

Date: Tuesday, November 21, 2000 Page 53 of 98

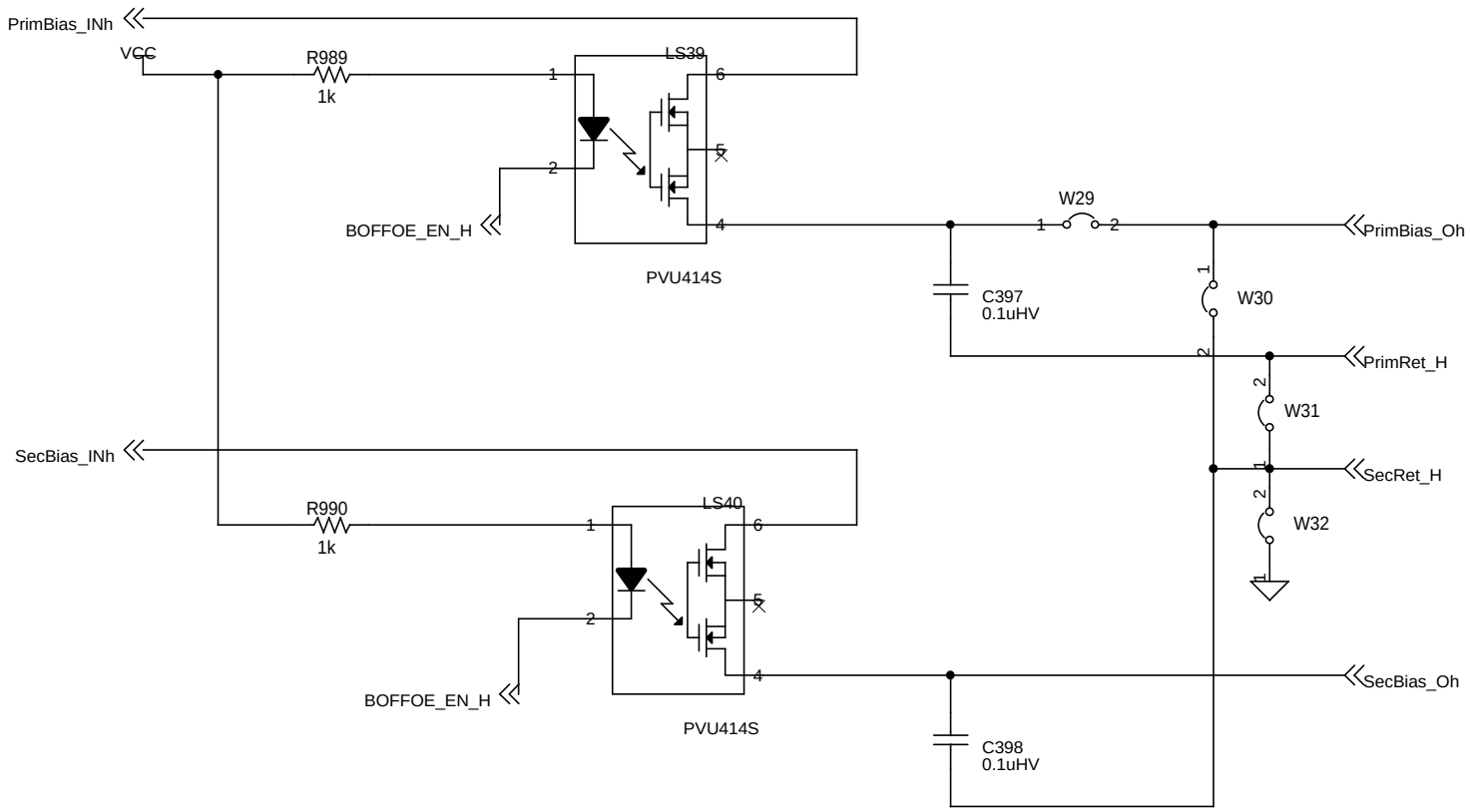

Electronics Design Laboratory

Tim J. Sobering
124 Burt Hall
Kansas State University
Manhattan, KS 66506-0400

Title: High Voltage Power Switching

Size	Document Number:	REV
A	HEP008	3.3

Date: Tuesday, November 21, 2000 | Page 54 of 98

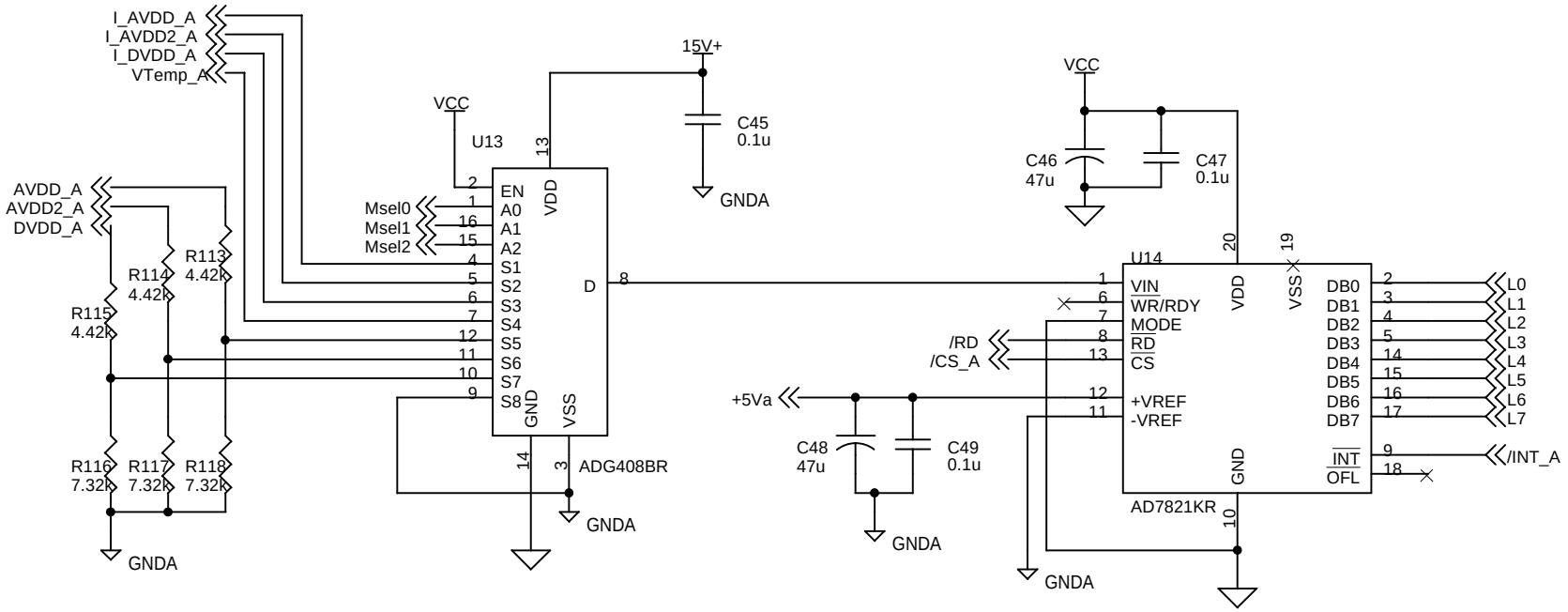

Title	Signal Mux & ADC	
Size A	Document Number HEP008	Rev 3.3
Date: Tuesday, November 21, 2000	Sheet 55 of 98	

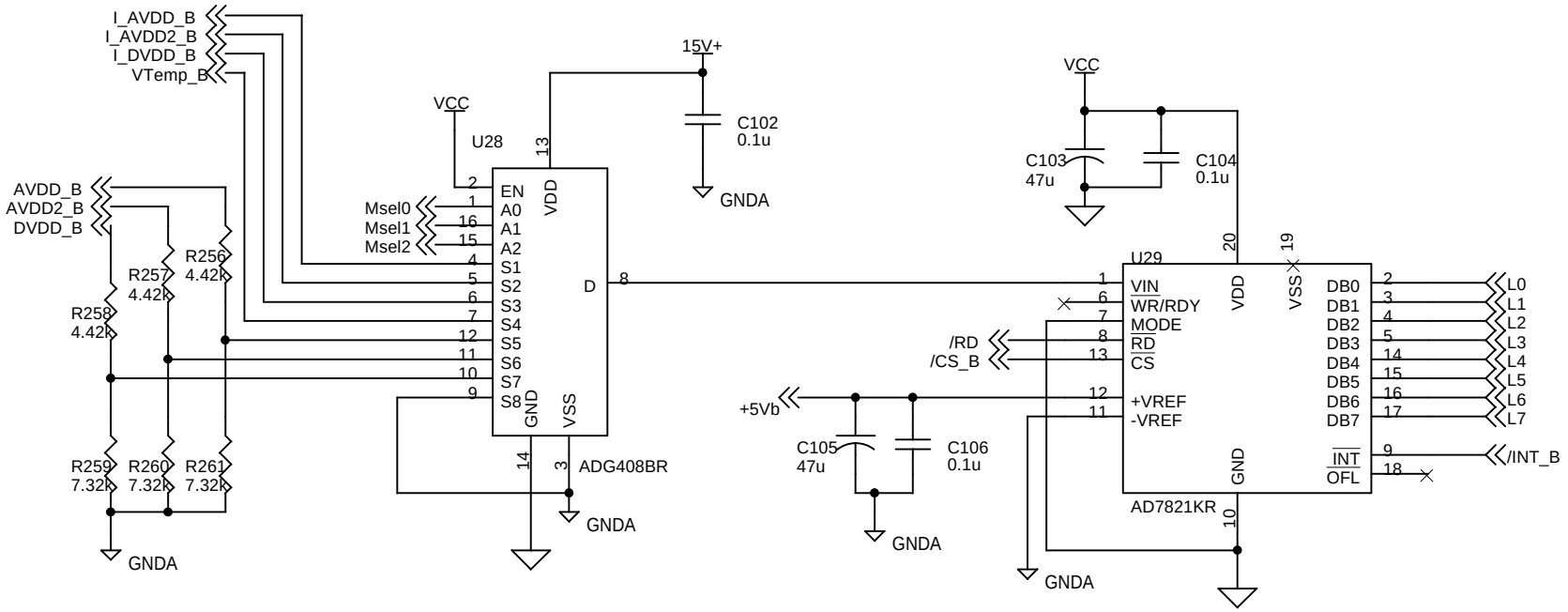

Title	Signal Mux & ADC	
Size A	Document Number HEP008	Rev 3.3
Date: Tuesday, November 21, 2000	Sheet 56 of 98	

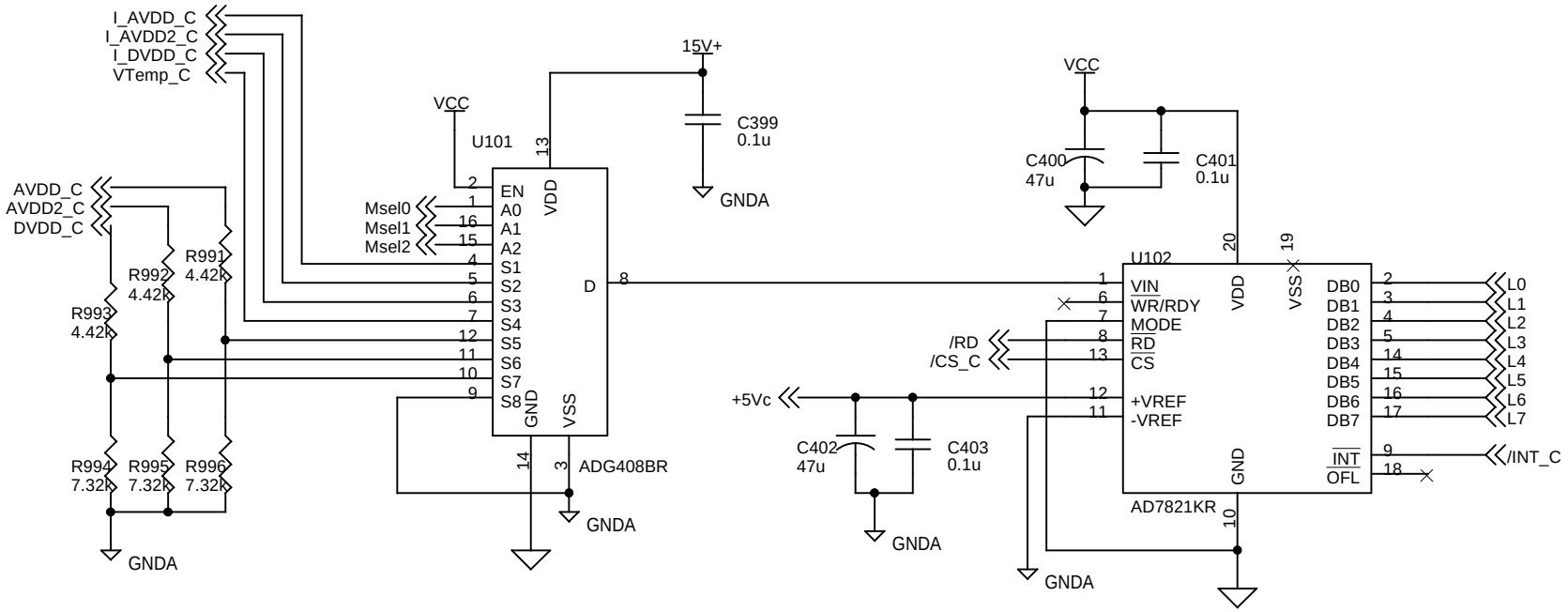

Title	Signal Mux & ADC	
Size A	Document Number HEP008	Rev 3.3
Date: Tuesday, November 21, 2000	Sheet 57 of 98	

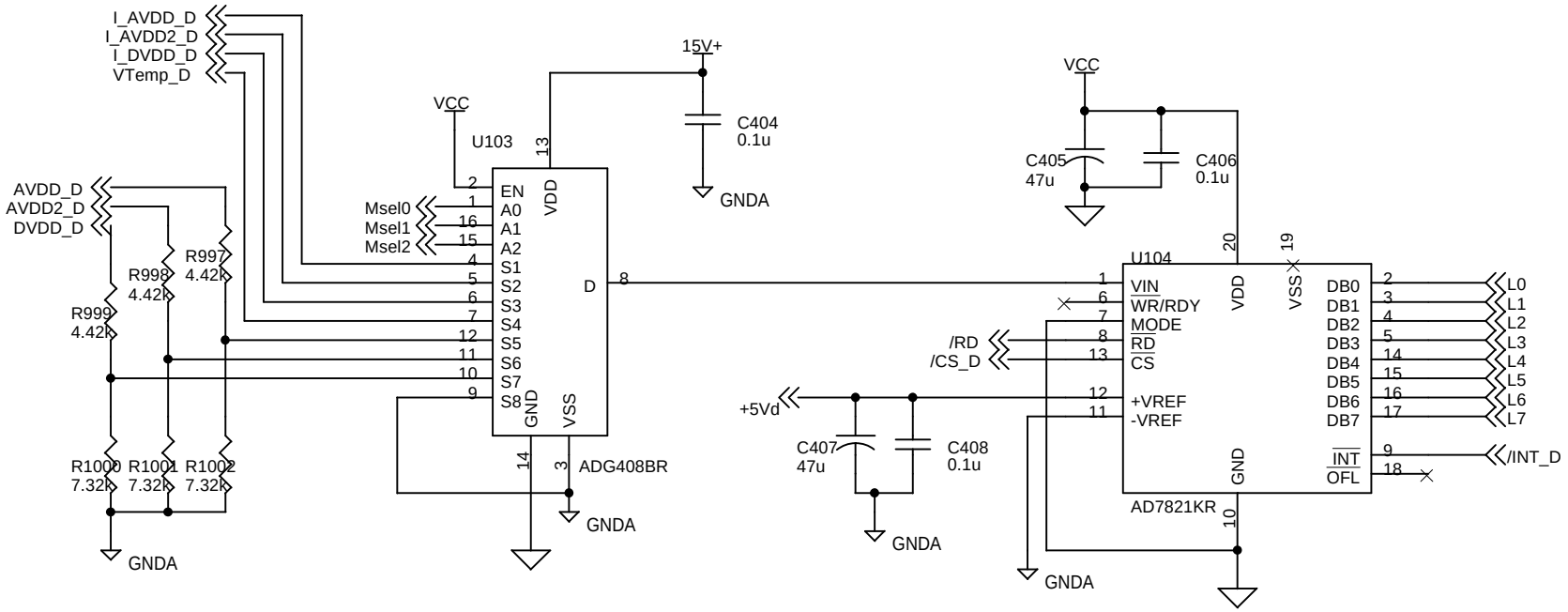

Title	Signal Mux & ADC	
Size A	Document Number HEP008	Rev 3.3
Date: Tuesday, November 21, 2000	Sheet 58 of 98	

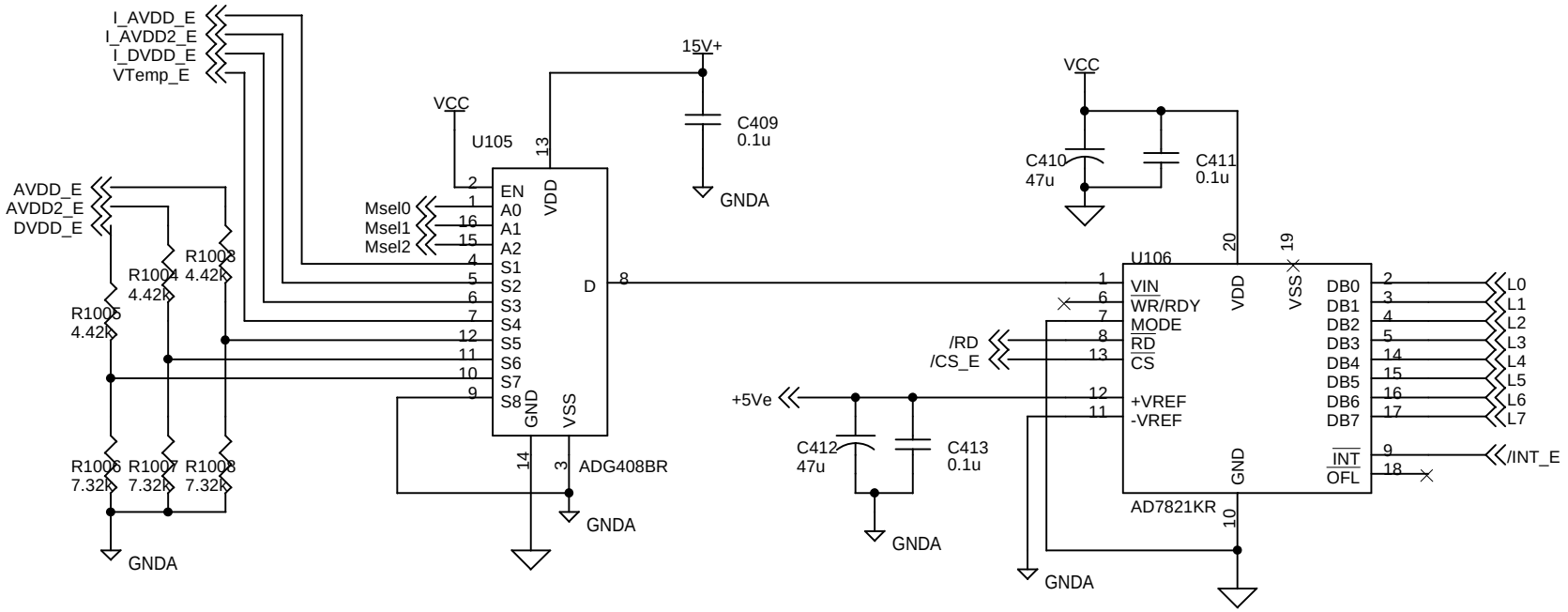

Title	Signal Mux & ADC	
Size A	Document Number HEP008	Rev 3.3
Date: Tuesday, November 21, 2000	Sheet 59 of 98	

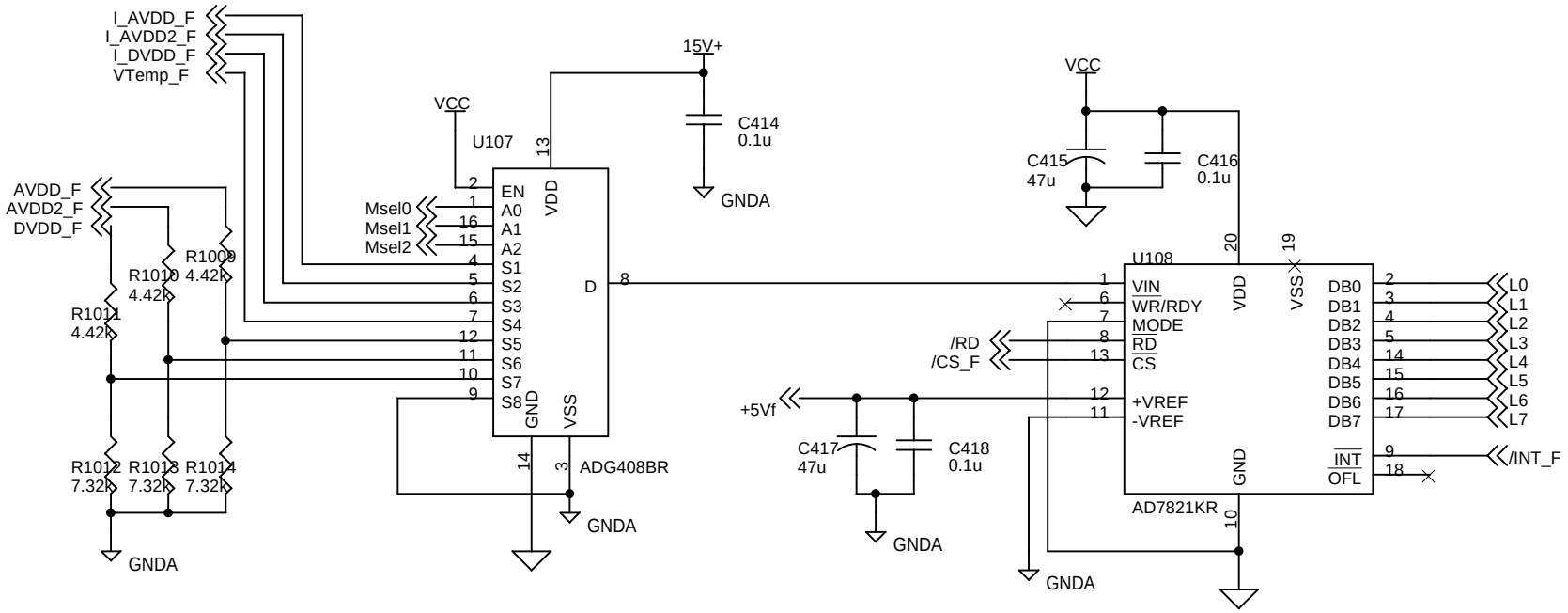

Title	Signal Mux & ADC	
Size A	Document Number HEP008	Rev 3.3
Date: Tuesday, November 21, 2000	Sheet 60 of 98	

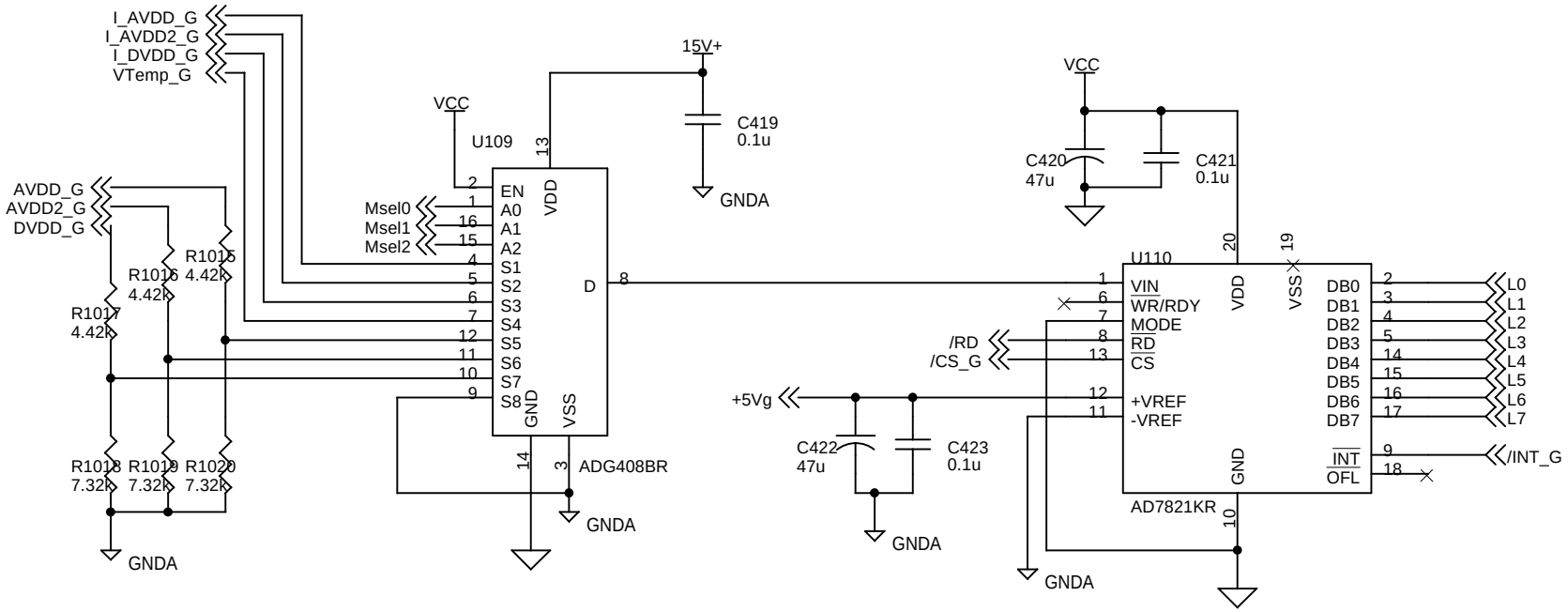

Title	Signal Mux & ADC	
Size A	Document Number HEP008	Rev 3.3
Date: Tuesday, November 21, 2000	Sheet 61 of 98	

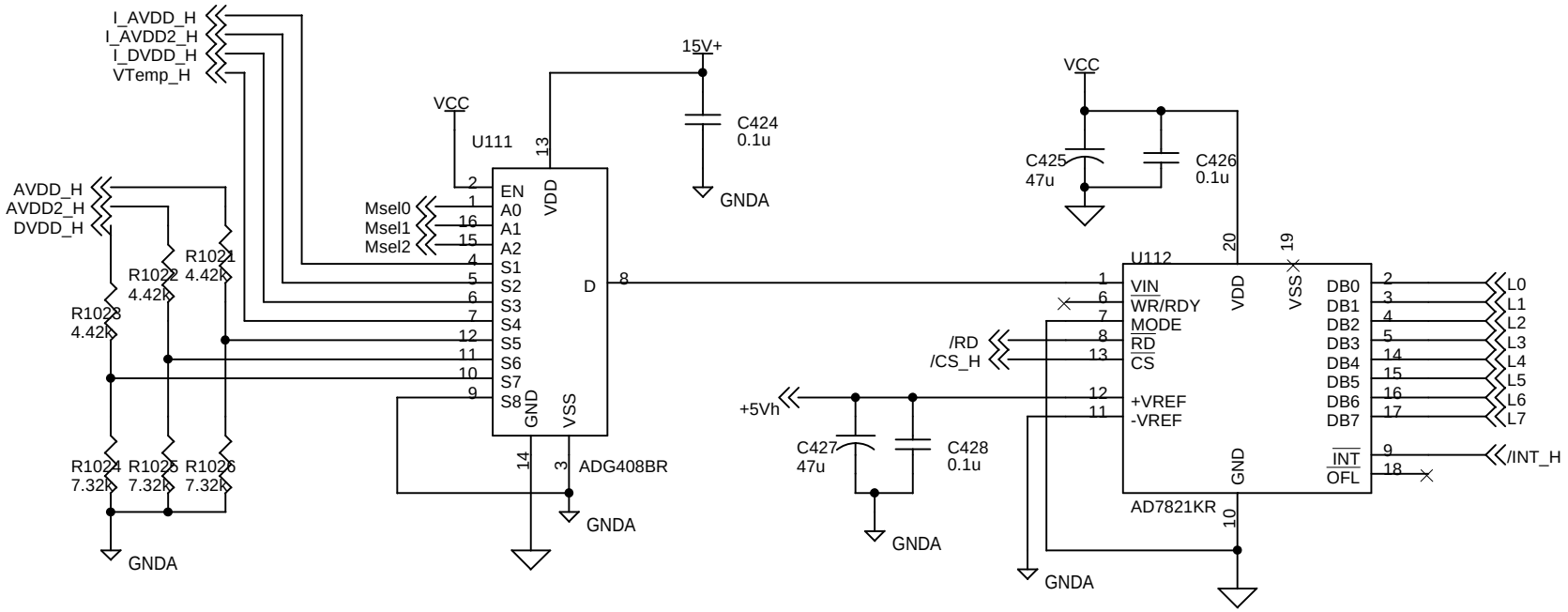

Title	Signal Mux & ADC	
Size A	Document Number HEP008	Rev 3.3
Date: Tuesday, November 21, 2000	Sheet 62 of 98	

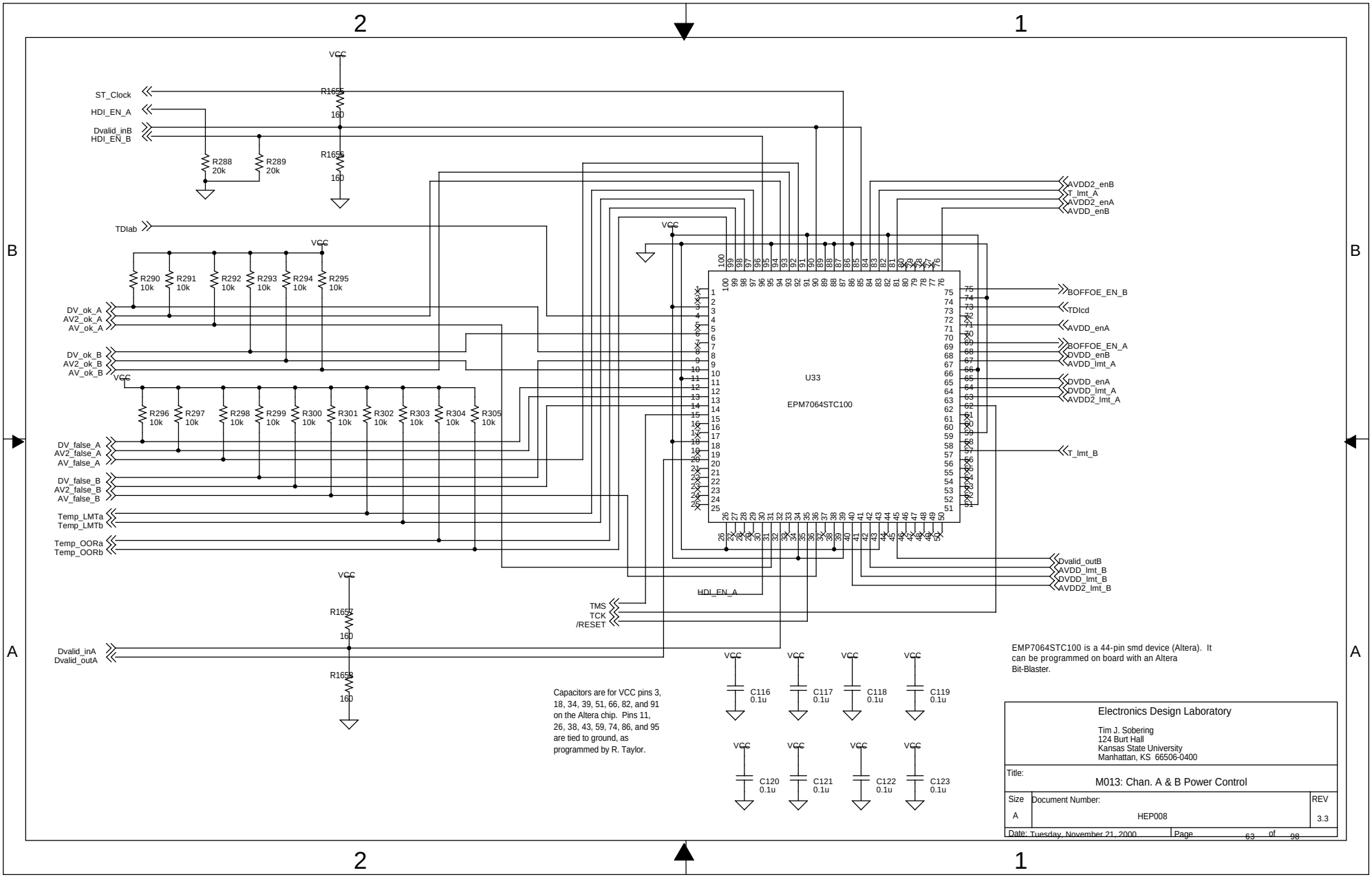
VCC
ST_Clock
HDI_EN_A
Dvalid_inB
HDI_EN_B
R1655
160
R1656
160
R288
20k
R289
20k
TDIab
R290
10k
R291
10k
R292
10k
R293
10k
R294
10k
R295
10k
DV_ok_A
AV2_ok_A
AV_ok_A
DV_ok_B
AV2_ok_B
AV_ok_B
R296
10k
R297
10k
R298
10k
R299
10k
R300
10k
R301
10k
R302
10k
R303
10k
R304
10k
R305
10k
DV_false_A
AV2_false_A
AV_false_A
DV_false_B
AV2_false_B
AV_false_B
Temp_LMTa
Temp_LMTb
Temp_OORa
Temp_OORb
R1657
160
R1658
160
Dvalid_inA
Dvalid_outA
TMS
TCK
/RESET
HDI_EN_A
U33
EPM7064STC100
AVDD2_enB
T_lmt_A
AVDD2_enA
AVDD_enB
BOFFOE_EN_B
TDIcd
AVDD_enA
BOFFOE_EN_A
DVDD_enB
AVDD_lmt_A
DVDD_enA
DVDD_lmt_A
AVDD2_lmt_A
T_lmt_B
Dvalid_outB
AVDD_lmt_B
DVDD_lmt_B
AVDD2_lmt_B
C116
0.1u
C117
0.1u
C118
0.1u
C119
0.1u
C120
0.1u
C121
0.1u
C122
0.1u
C123
0.1u
Capacitors are for VCC pins 3, 18, 34, 39, 51, 66, 82, and 91 on the Altera chip. Pins 11, 26, 38, 43, 59, 74, 86, and 95 are tied to ground, as programmed by R. Taylor.
EMP7064STC100 is a 44-pin smd device (Altera). It can be programmed on board with an Altera Bit-Blaster.
Electronics Design Laboratory
Tim J. Sobering
124 Burt Hall
Kansas State University
Manhattan, KS 66506-0400
Title:
M013: Chan. A & B Power Control
Size
A
Document Number:
HEP008
REV
3.3
Date: Tuesday, November 21, 2000
Page 63 of 98

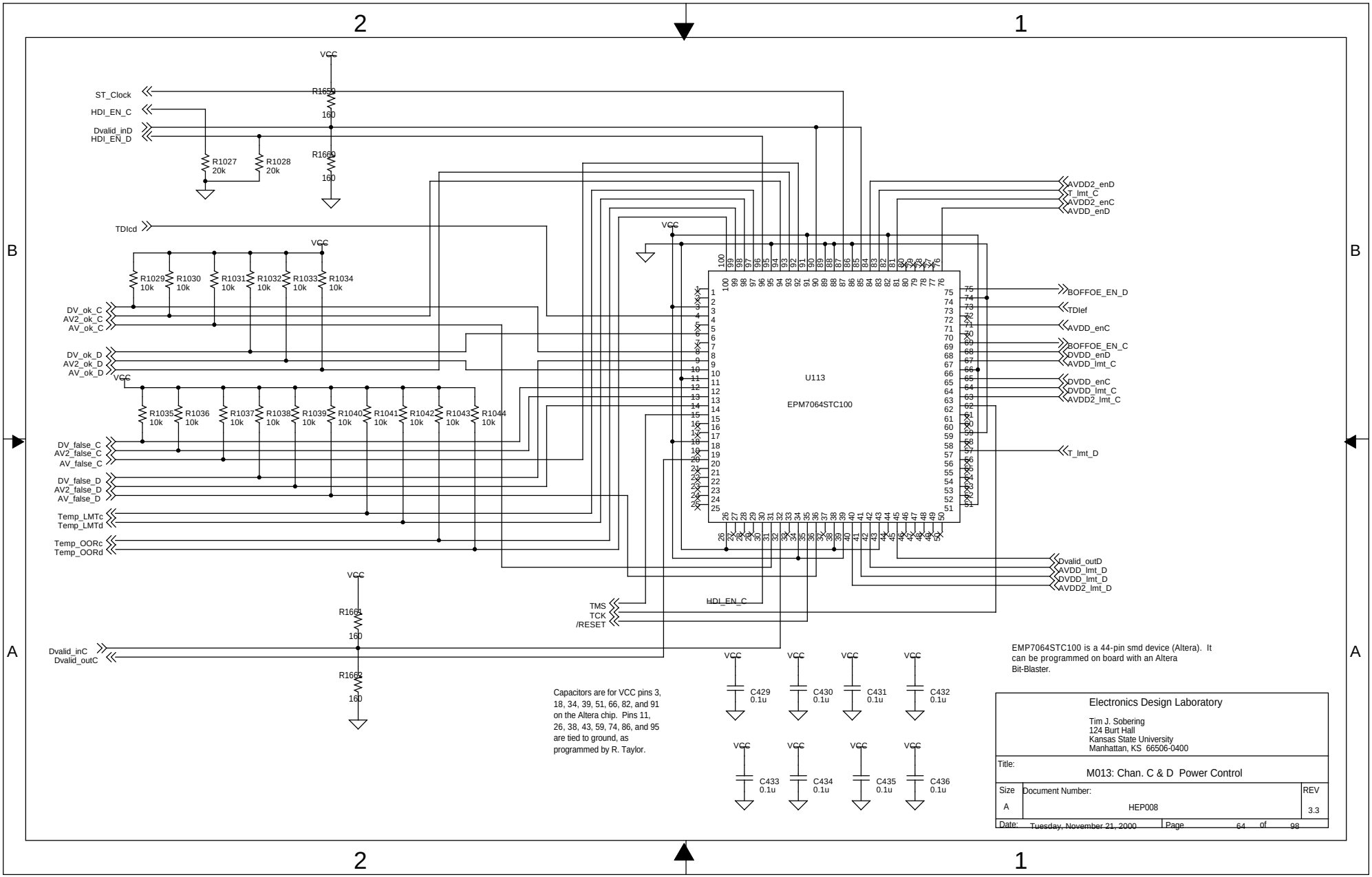

Capacitors are for VCC pins 3, 18, 34, 39, 51, 66, 82, and 91 on the Altera chip. Pins 11, 26, 38, 43, 59, 74, 86, and 95 are tied to ground, as programmed by R. Taylor.

EMP7064STC100 is a 44-pin smd device (Altera). It can be programmed on board with an Altera Bit-Blaster.

Electronics Design Laboratory

Tim J. Sobering
124 Burt Hall
Kansas State University
Manhattan, KS 66506-0400

Title: M013: Chan. C & D Power Control

Size	Document Number:	REV
A	HEP008	3.3

Date: Tuesday, November 21, 2000 Page 64 of 98

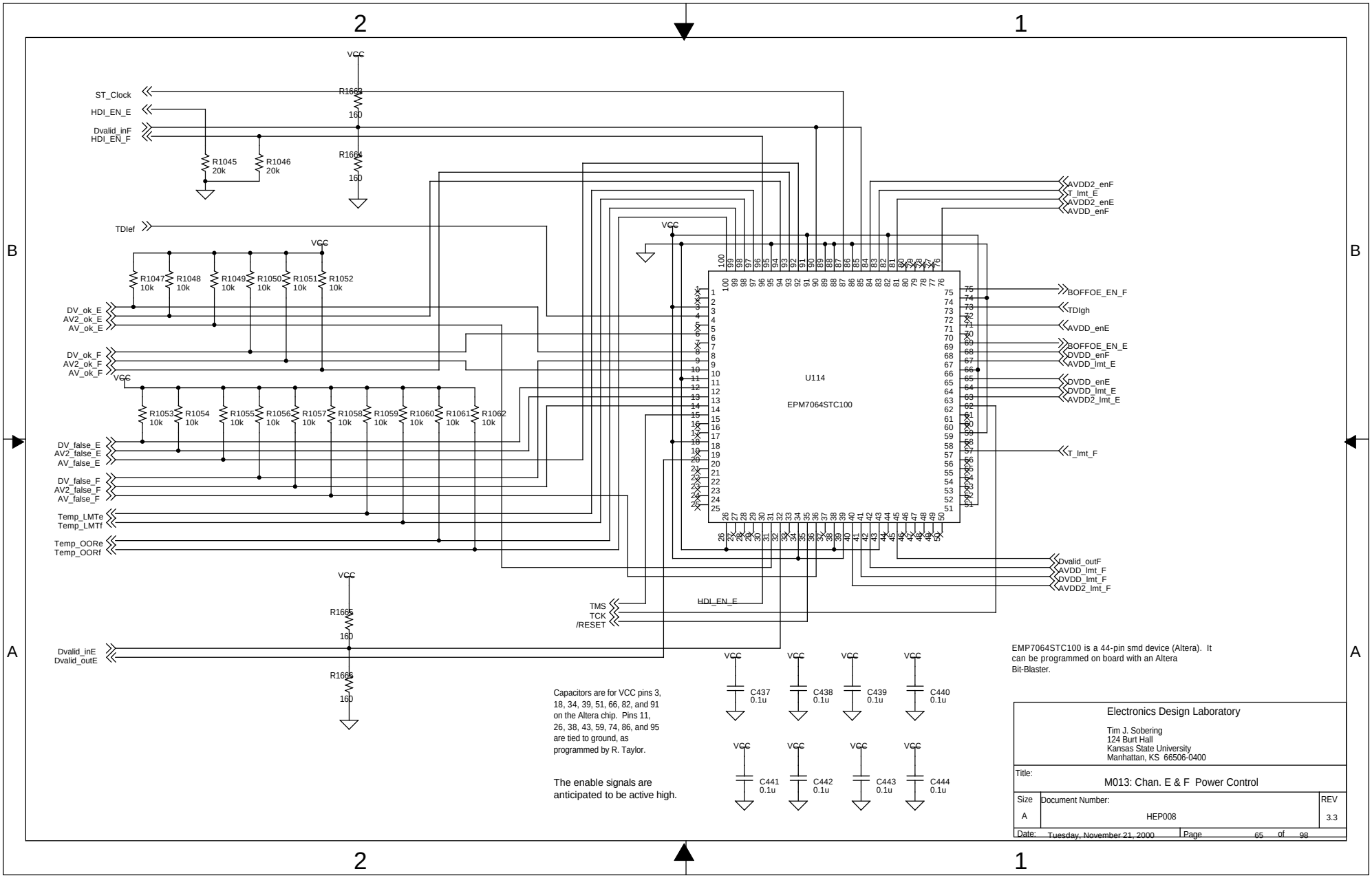

Capacitors are for VCC pins 3, 18, 34, 39, 51, 66, 82, and 91 on the Altera chip. Pins 11, 26, 38, 43, 59, 74, 86, and 95 are tied to ground, as programmed by R. Taylor.

The enable signals are anticipated to be active high.

EMP7064STC100 is a 44-pin smd device (Altera). It can be programmed on board with an Altera Bit-Blaster.

Electronics Design Laboratory

Tim J. Sobering
124 Burt Hall
Kansas State University
Manhattan, KS 66506-0400

Title: M013: Chan. E & F Power Control

Size	Document Number:	REV
A	HEP008	3.3

Date: Tuesday, November 21, 2000 | Page 65 of 98

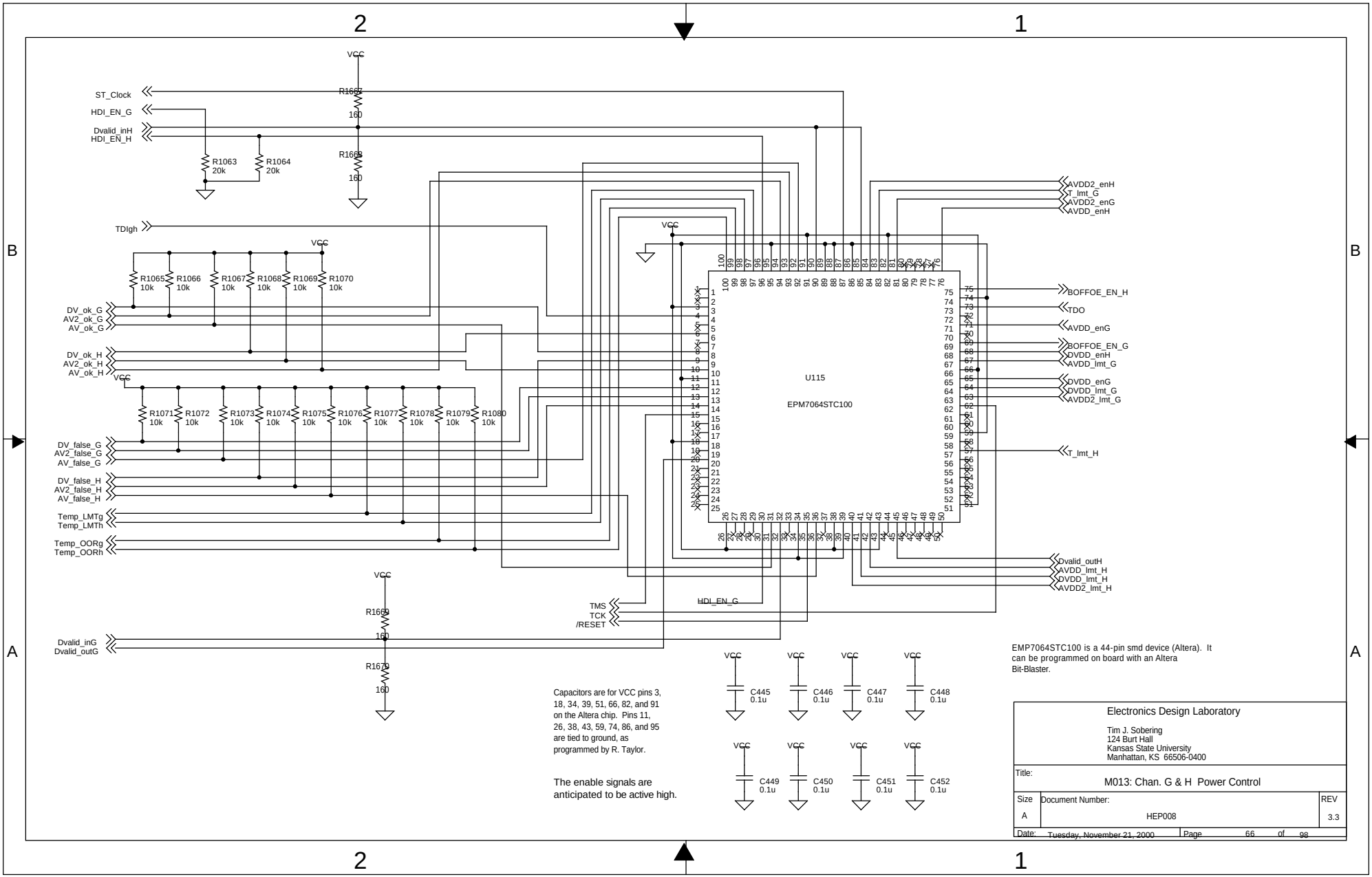

Capacitors are for VCC pins 3, 18, 34, 39, 51, 66, 82, and 91 on the Altera chip. Pins 11, 26, 38, 43, 59, 74, 86, and 95 are tied to ground, as programmed by R. Taylor.

The enable signals are anticipated to be active high.

EMP7064STC100 is a 44-pin smd device (Altera). It can be programmed on board with an Altera Bit-Blaster.

Electronics Design Laboratory

Tim J. Sobering
124 Burt Hall
Kansas State University
Manhattan, KS 66506-0400

Title: M013: Chan. G & H Power Control		
Size A	Document Number: HEP008	REV 3.3
Date: Tuesday, November 21, 2000	Page 66 of 98	

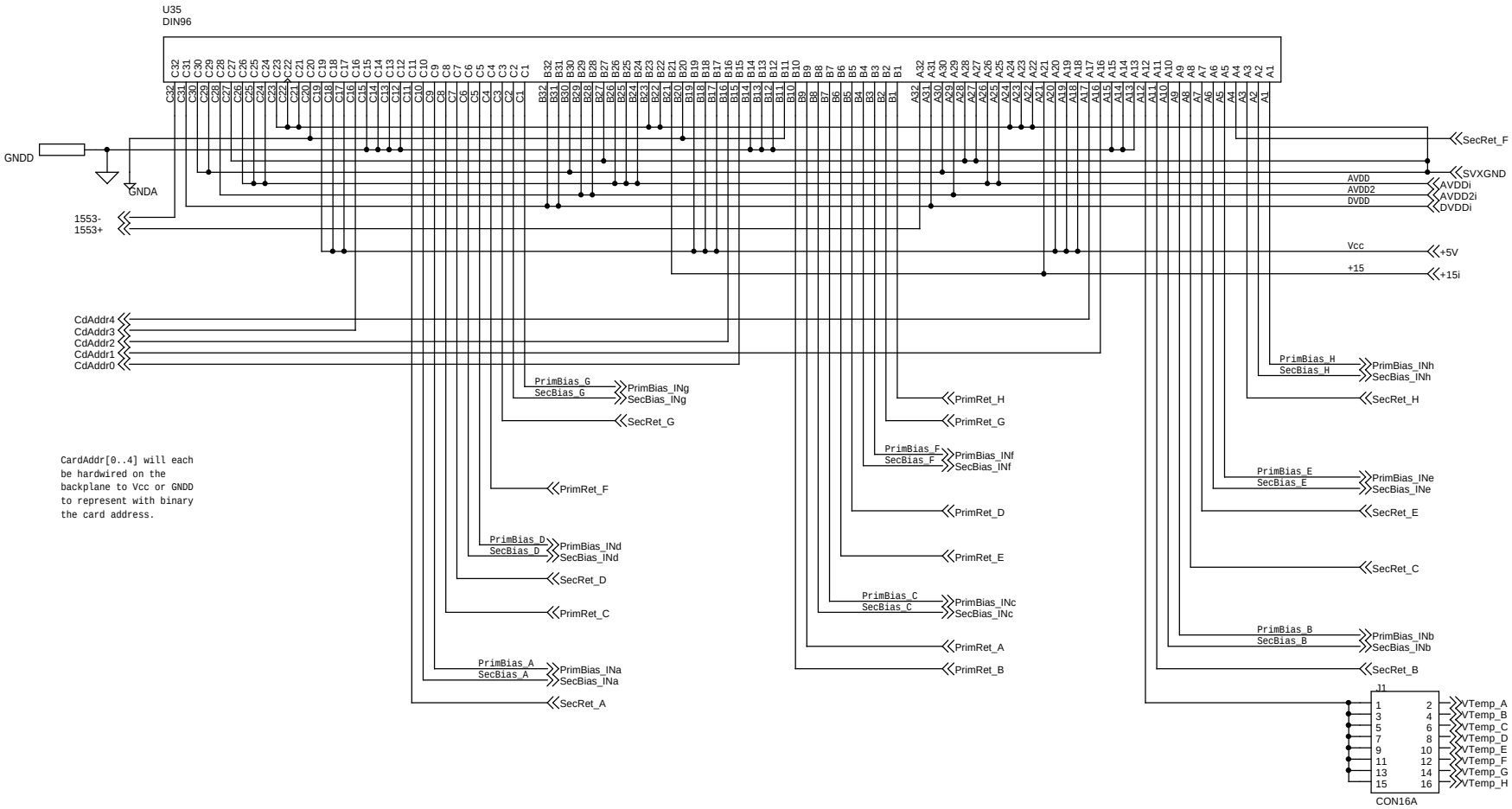

CardAddr[0..4] will each be hardwired on the backplane to Vcc or GNDD to represent with binary the card address.

Title	Power Connector & HV Relays	
Size B	Document Number HEP008	Rev 3.3
Date: Tuesday, November 21, 2000	Sheet 67 of 98	

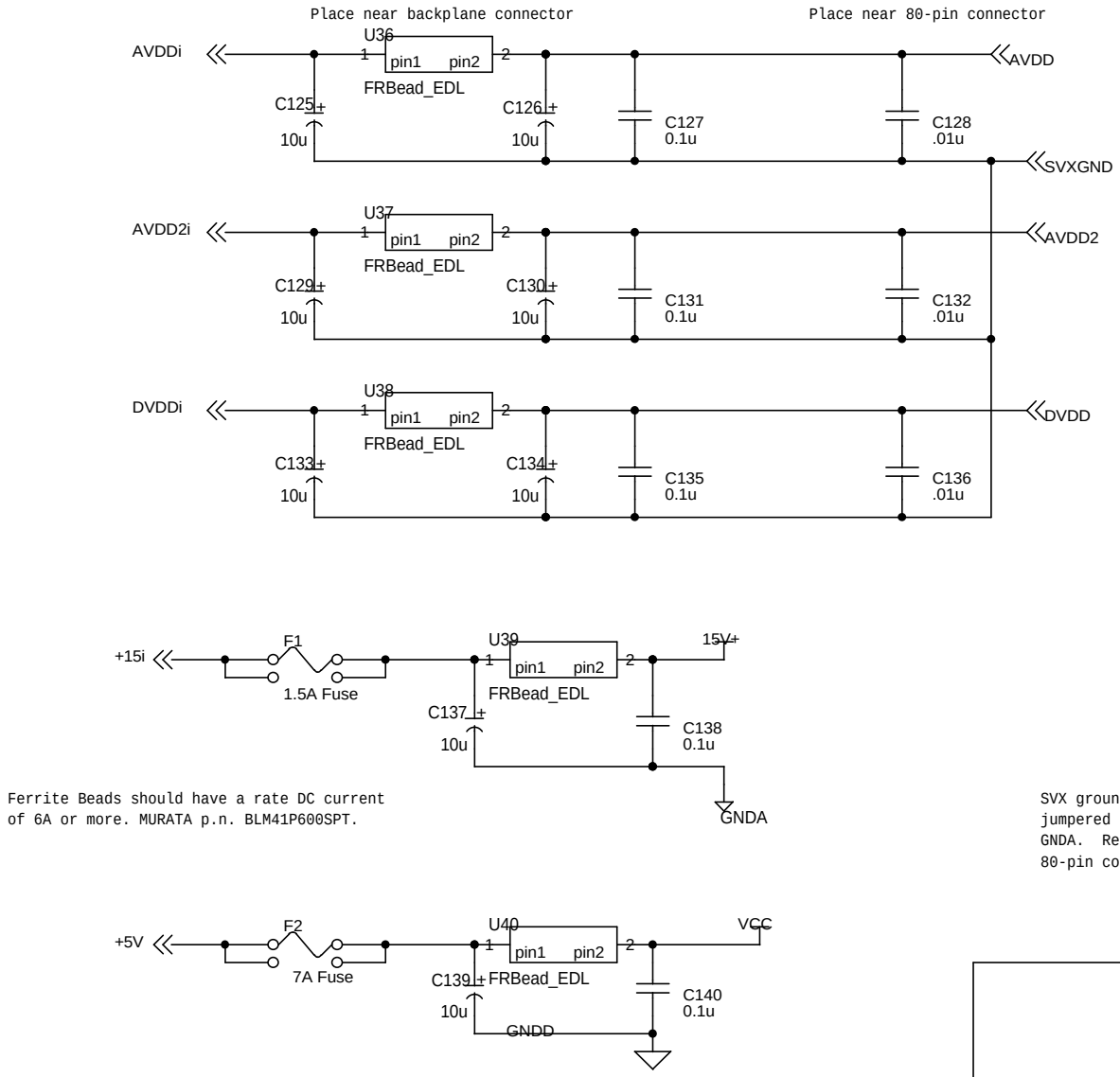

Ferrite Beads should have a rate DC current of 6A or more. MURATA p.n. BLM41P600SPT.

SVX grounds should be jumpered to either GNDD or GNDA. Res. should be near 80-pin connectors.

Electronics Design Laboratory Tim J. Sobering 124 Burt Hall Kansas State University Manhattan, KS 66506-0400		
Title: Power Supply Decoupling		
Size A	Document Number: HEP008	REV 3.3
Date: Tuesday, November 21, 2000	Page 68 of 98	

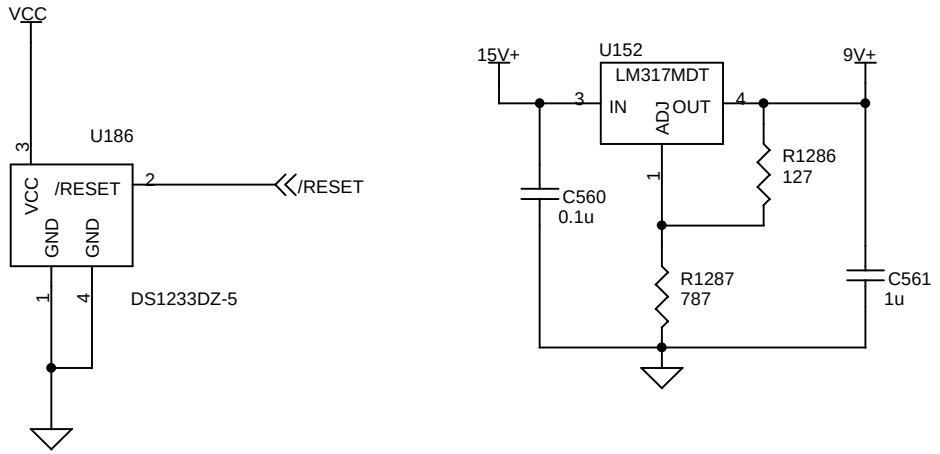

Title	Reference Voltages	
Size A	Document Number HEP008	Rev 3.3
Date: Tuesday, November 21, 2000	Sheet 69 of 98	

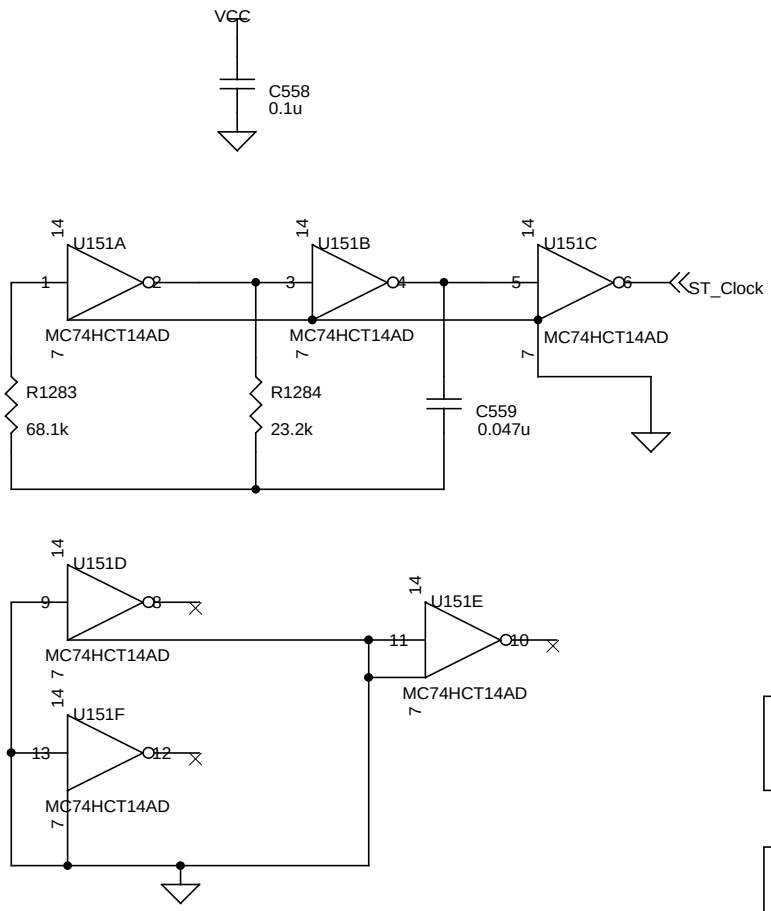

74HCT14 clock circuit was designed as suggested in the MOTOROLA High-Speed CMOS Data Book (pg. 2-26)

Electronics Design Laboratory

Tim J. Sobering
124 Burt Hall
Kansas State University
Manhattan, KS 66506-0400

Title: M011: State Machine Clock Generator

Size	Document Number:	REV
A	HEP008	3.3

Date: Tuesday, November 21, 2000 | Page 70 of 98

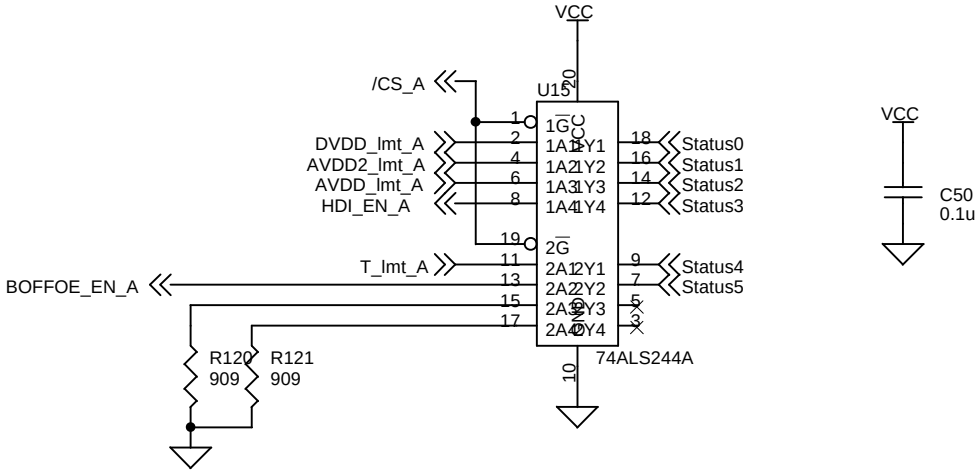

Title	Status Bit Channel Selection	
Size A	Document Number HEP008	Rev 3.3
Date: Tuesday, November 21, 2000	Sheet 71 of 98	

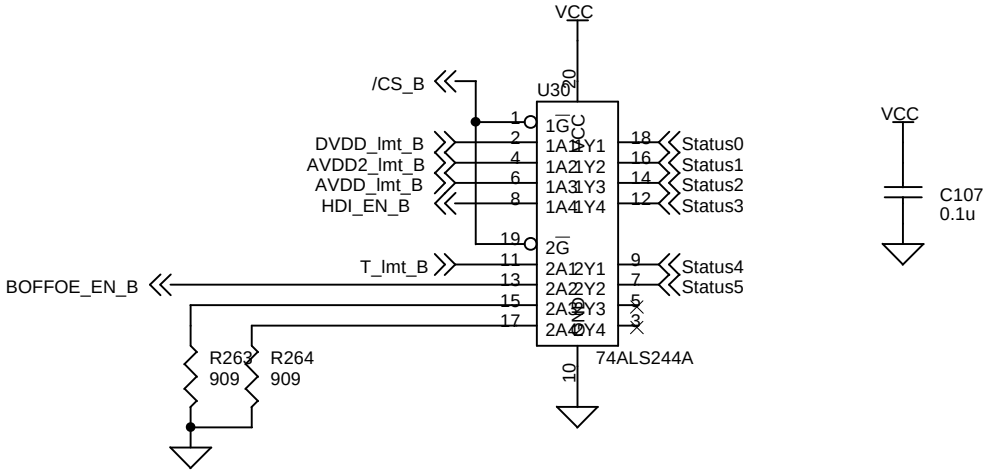

Title	Status Bit Channel Selection	
Size A	Document Number HEP008	Rev 3.3
Date: Tuesday, November 21, 2000	Sheet 72 of 98	

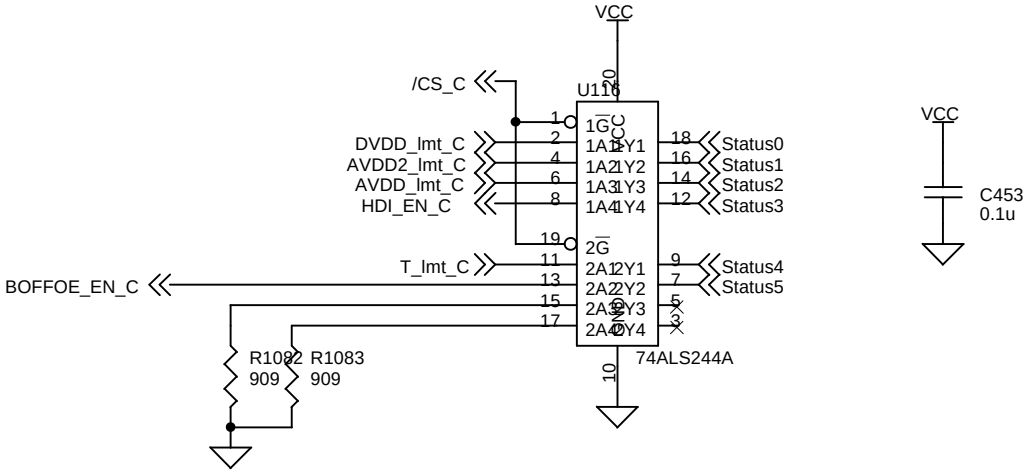

Title	Status Bit Channel Selection	
Size A	Document Number HEP008	Rev 3.3
Date: Tuesday, November 21, 2000	Sheet 73 of 98	

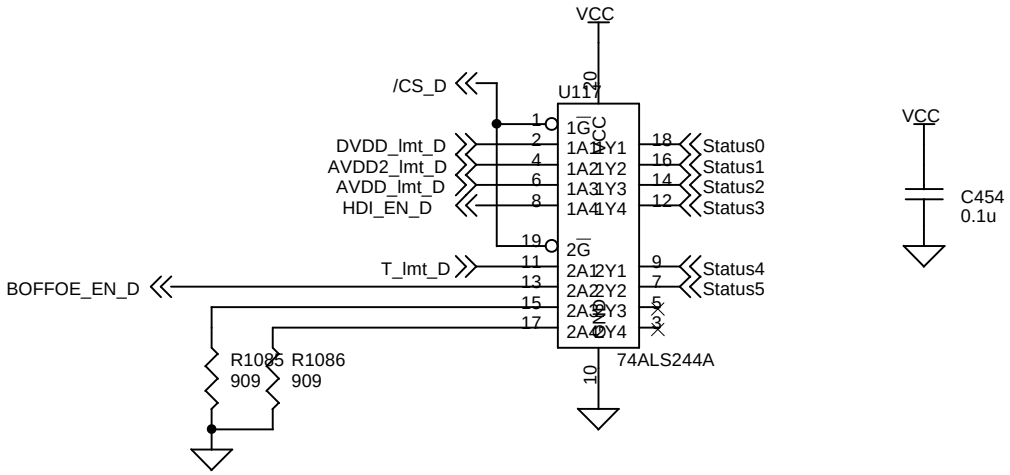

Title	Status Bit Channel Selection	
Size A	Document Number HEP008	Rev 3.3
Date: Tuesday, November 21, 2000	Sheet 74 of 98	

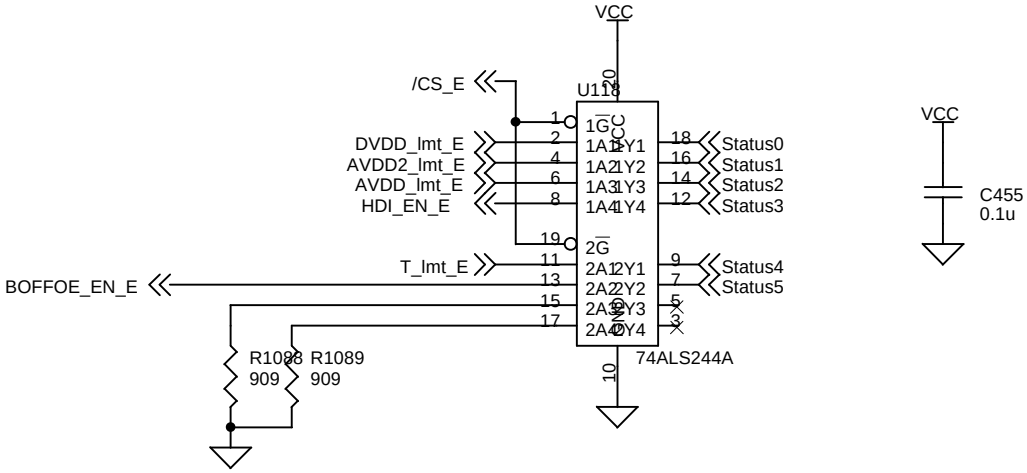

Title	Status Bit Channel Selection	
Size A	Document Number HEP008	Rev 3.3
Date: Tuesday, November 21, 2000	Sheet 75 of 98	

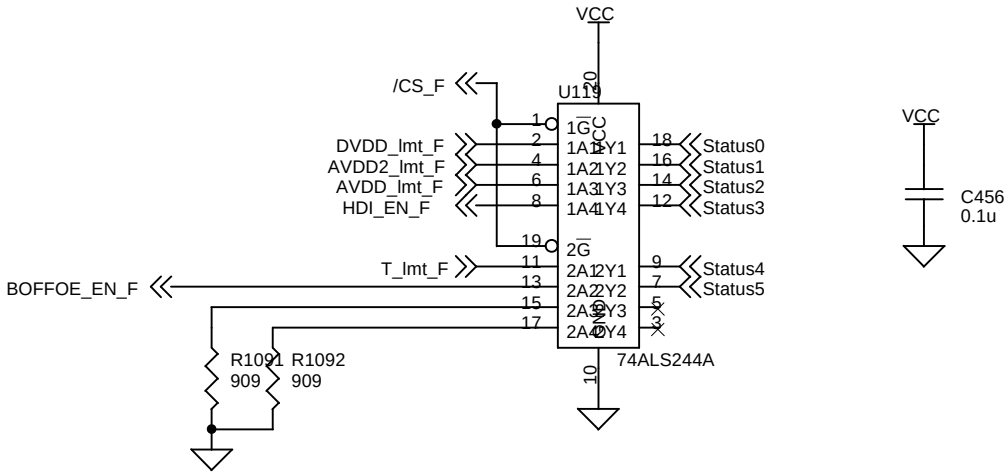

Title	Status Bit Channel Selection	
Size A	Document Number HEP008	Rev 3.3
Date: Tuesday, November 21, 2000	Sheet 76 of 98	

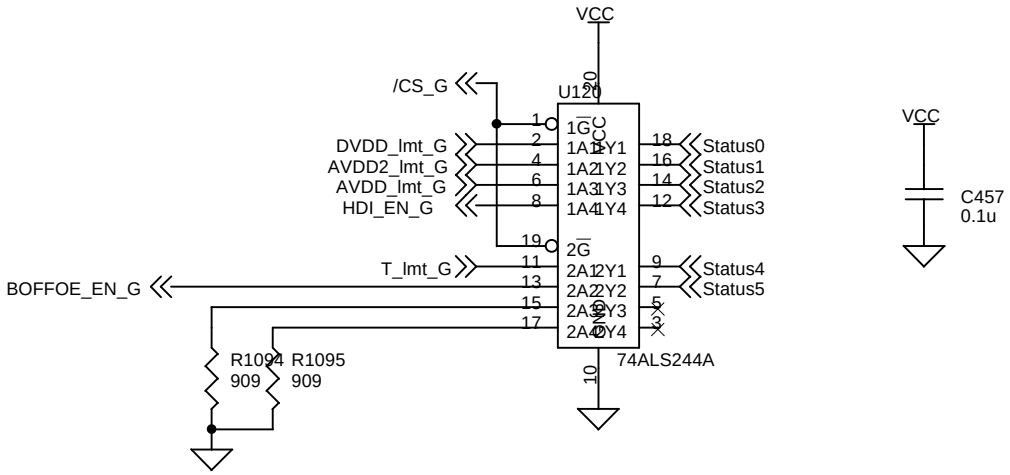

Title	Status Bit Channel Selection	
Size A	Document Number HEP008	Rev 3.3
Date: Tuesday, November 21, 2000	Sheet 77 of 98	

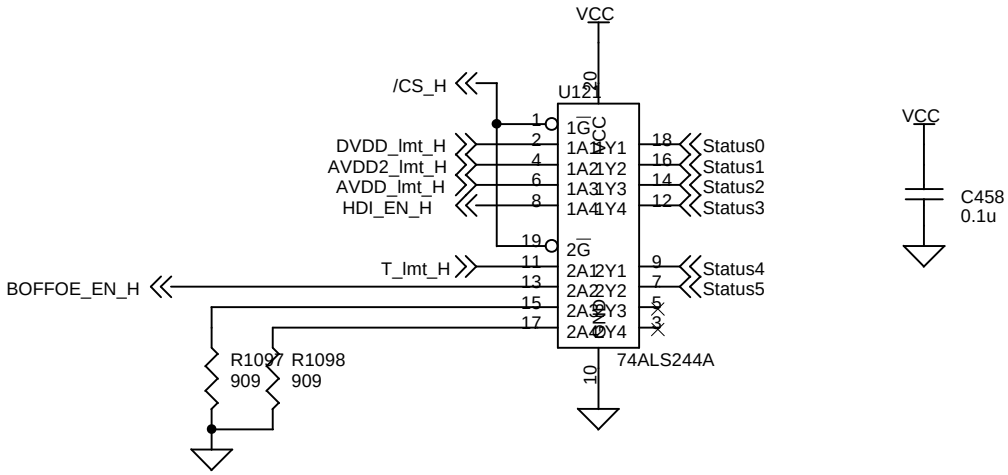

Title	Status Bit Channel Selection	
Size A	Document Number HEP008	Rev 3.3
Date: Tuesday, November 21, 2000	Sheet 78 of 98	

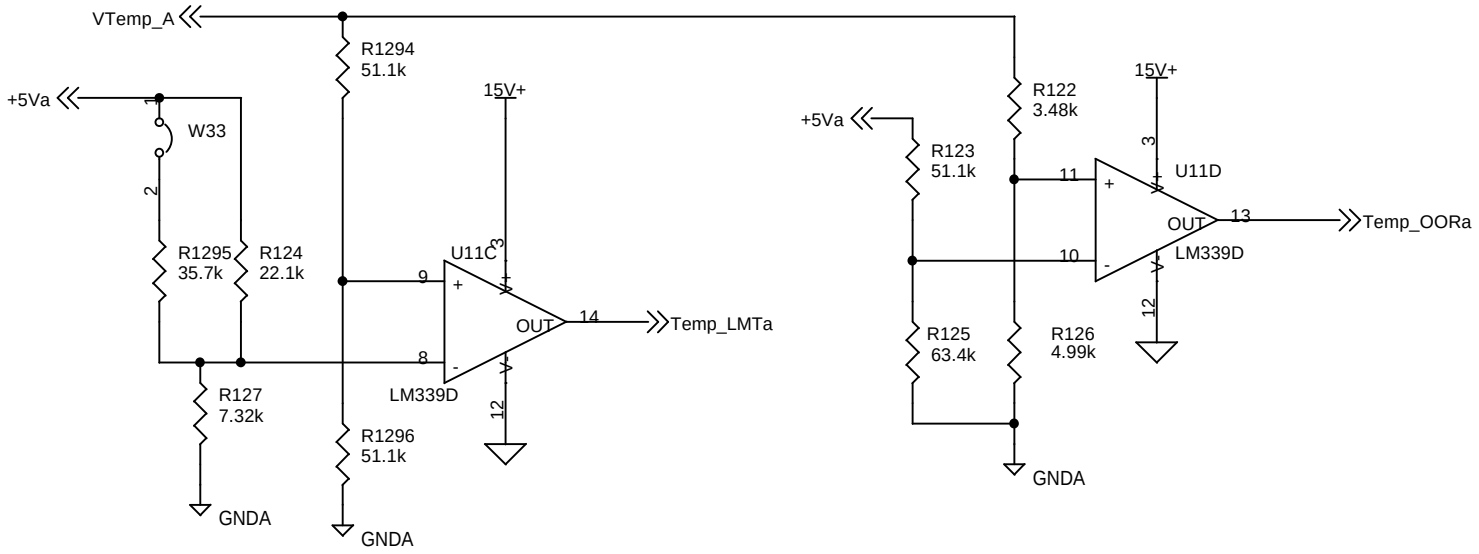

Title	Tempatrue Level Indicator	
Size A	Document Number HEP008	Rev 3.3
Date: Tuesday, November 21, 2000	Sheet 79 of 98	

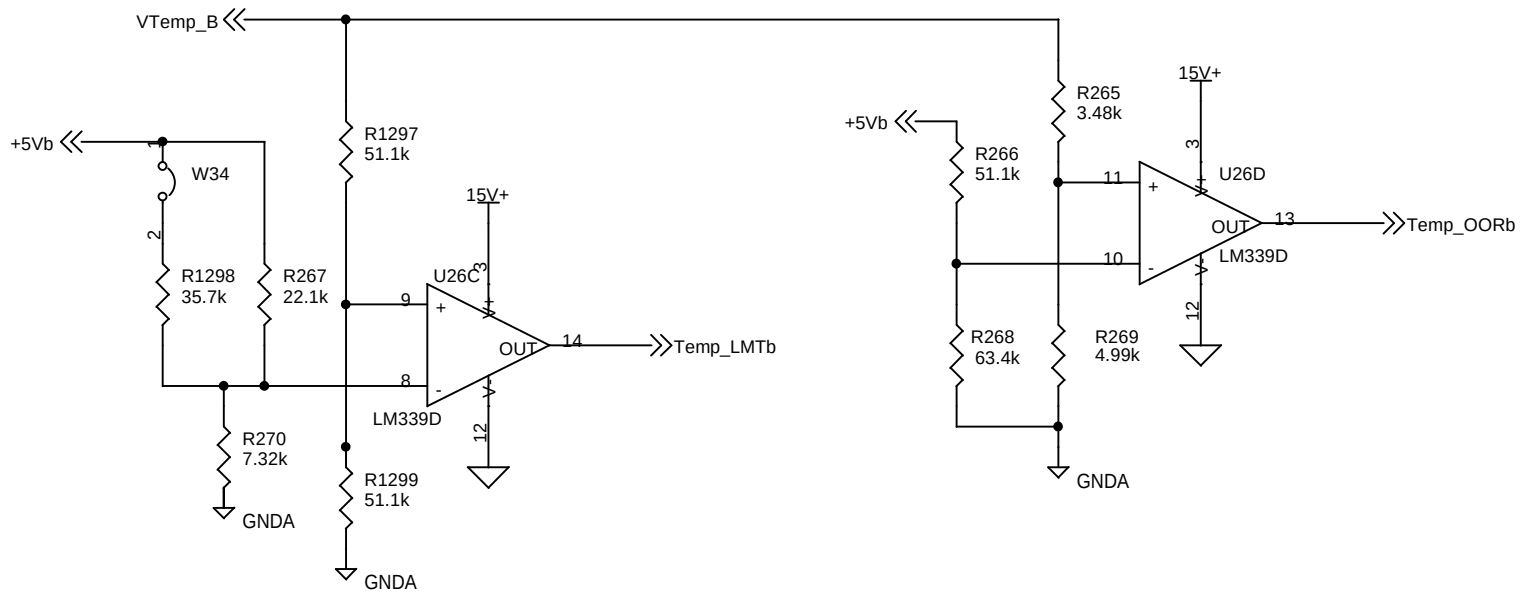

Title	Tempatrue Level Indicator	
Size A	Document Number HEP008	Rev 3.3
Date: Tuesday, November 21, 2000	Sheet 80 of 98	

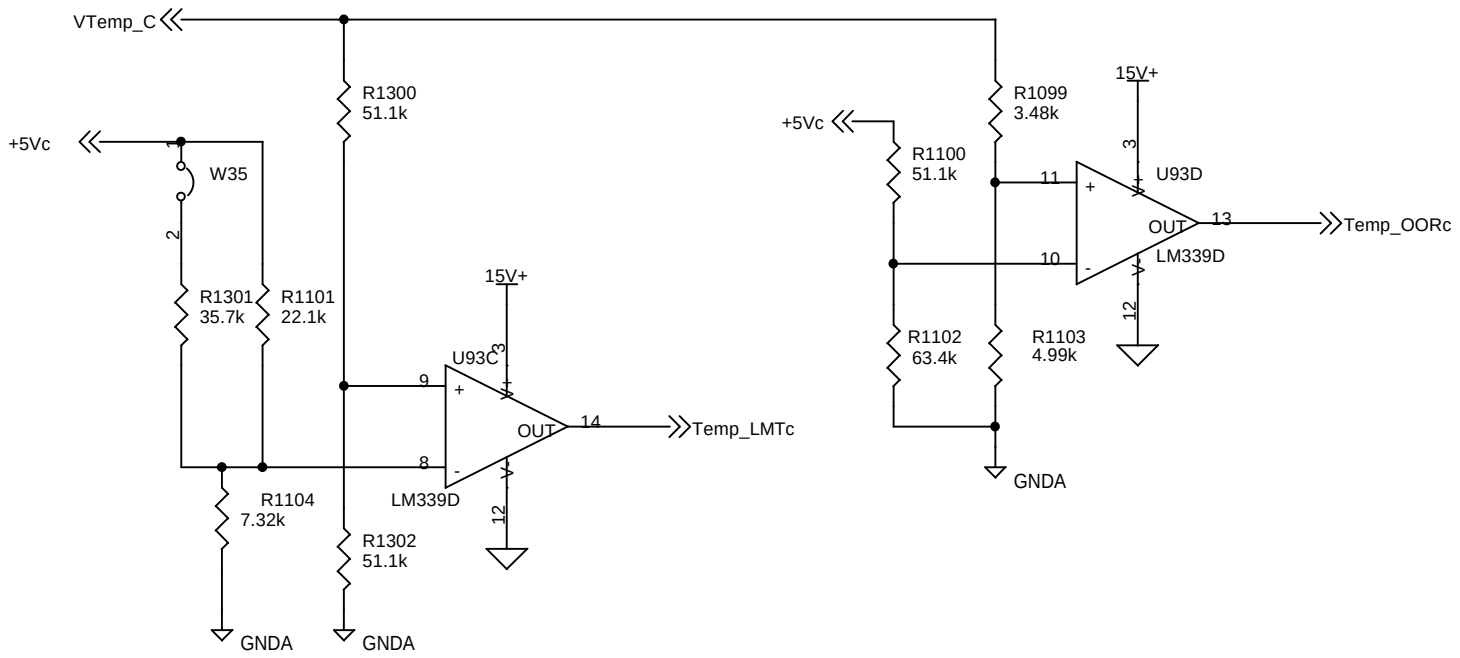

Title	Tempatrue Level Indicator	
Size A	Document Number HEP008	Rev 3.3
Date: Tuesday, November 21, 2000	Sheet 81 of 98	

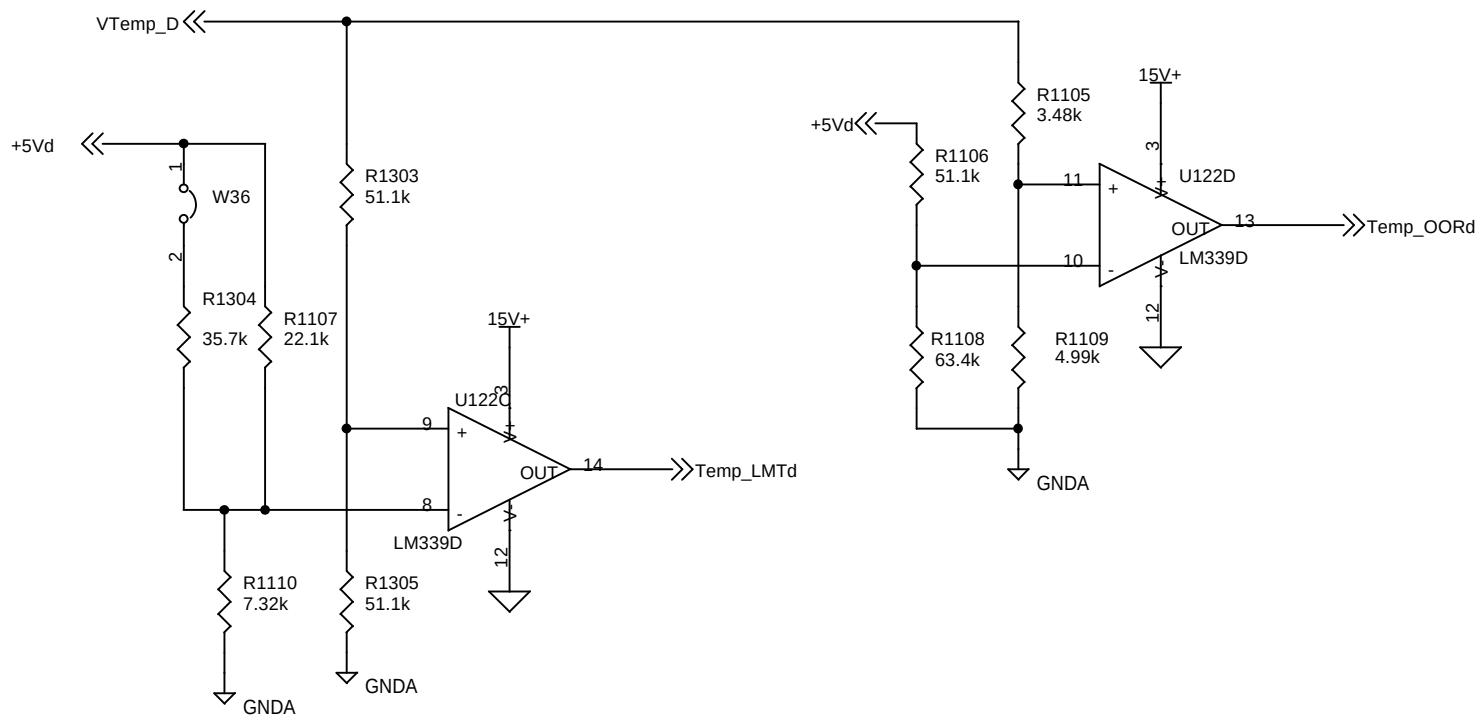

Title	Tempatrue Level Indicator	
Size A	Document Number HEP008	Rev 3.3
Date: Tuesday, November 21, 2000	Sheet 82 of 98	

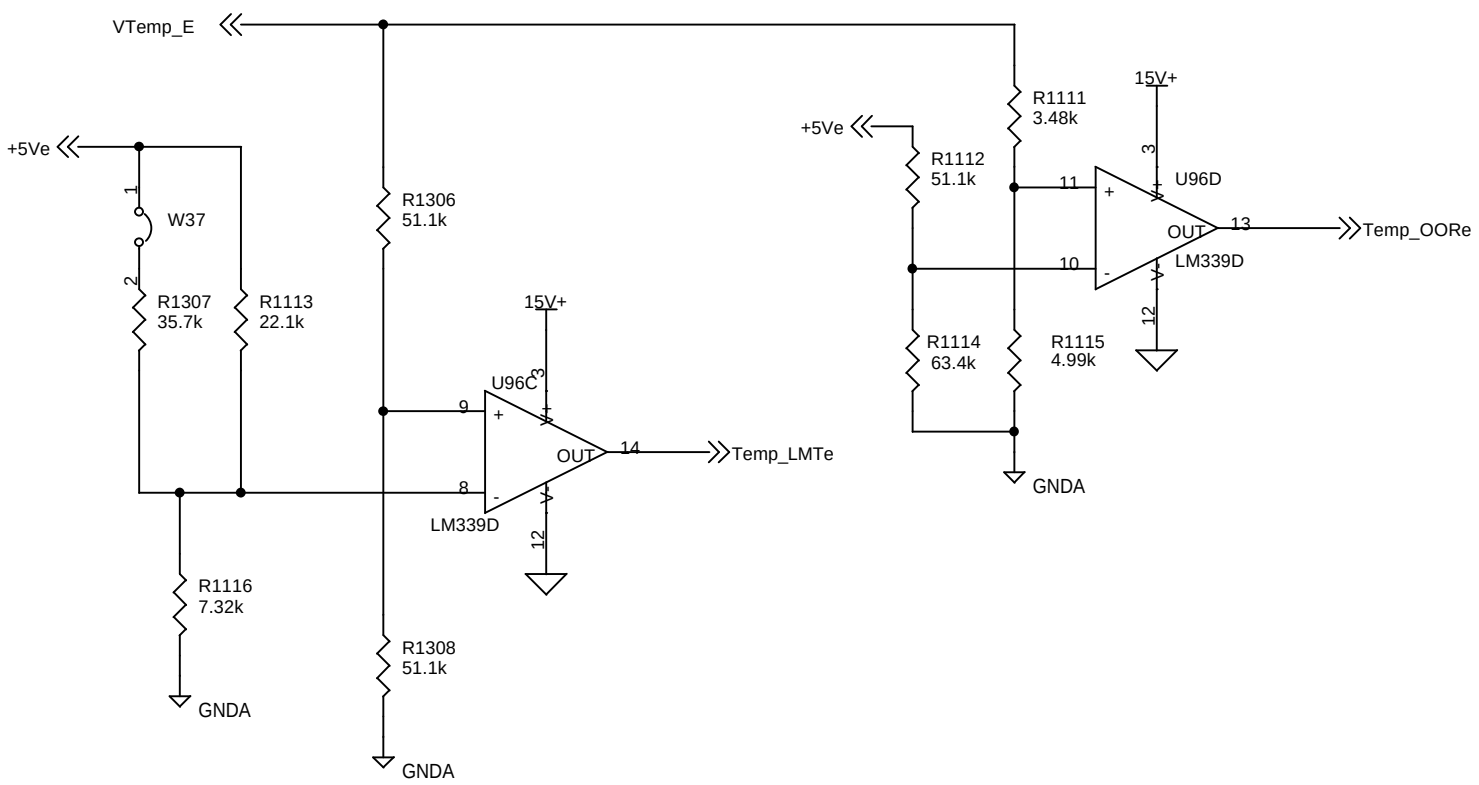

Title	Tempatrue Level Indicator	
Size A	Document Number HEP008	Rev 3.3
Date: Tuesday, November 21, 2000	Sheet 83 of 98	

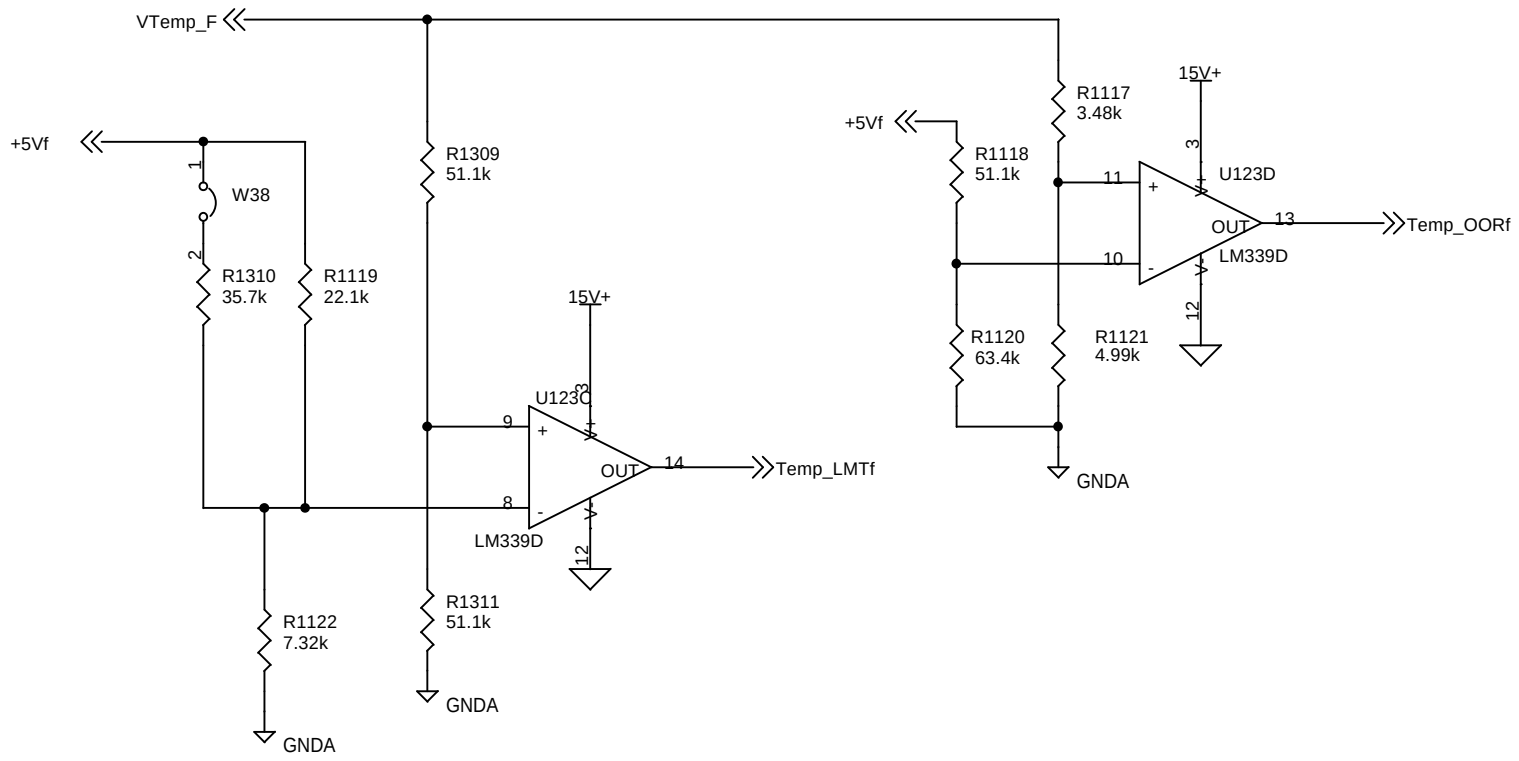

Title	Tempatrue Level Indicator	
Size A	Document Number HEP008	Rev 3.3
Date: Tuesday, November 21, 2000	Sheet 84 of 98	

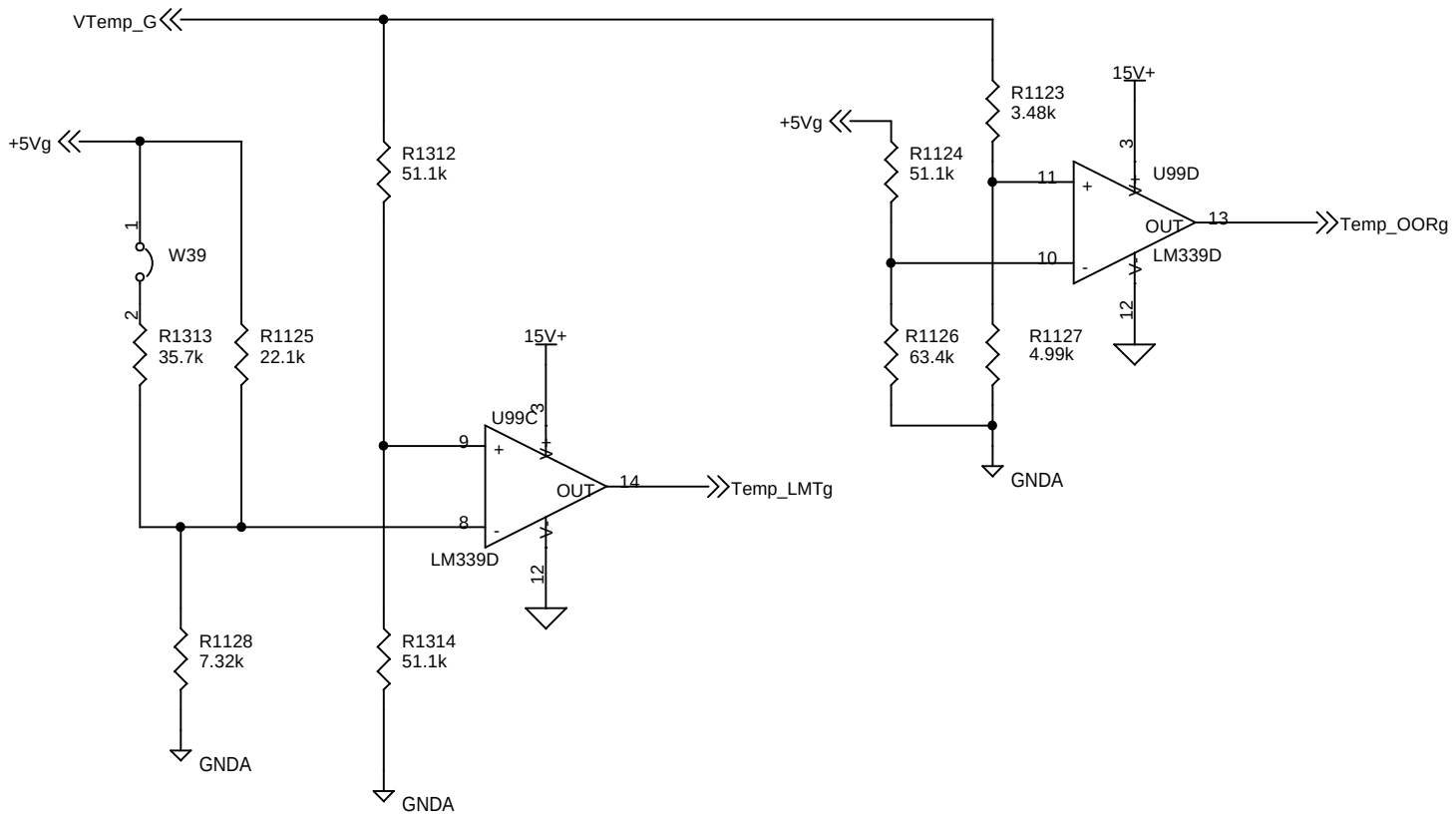

Title	Tempatrue Level Indicator	
Size A	Document Number HEP008	Rev 3.3
Date: Tuesday, November 21, 2000	Sheet 85 of 98	

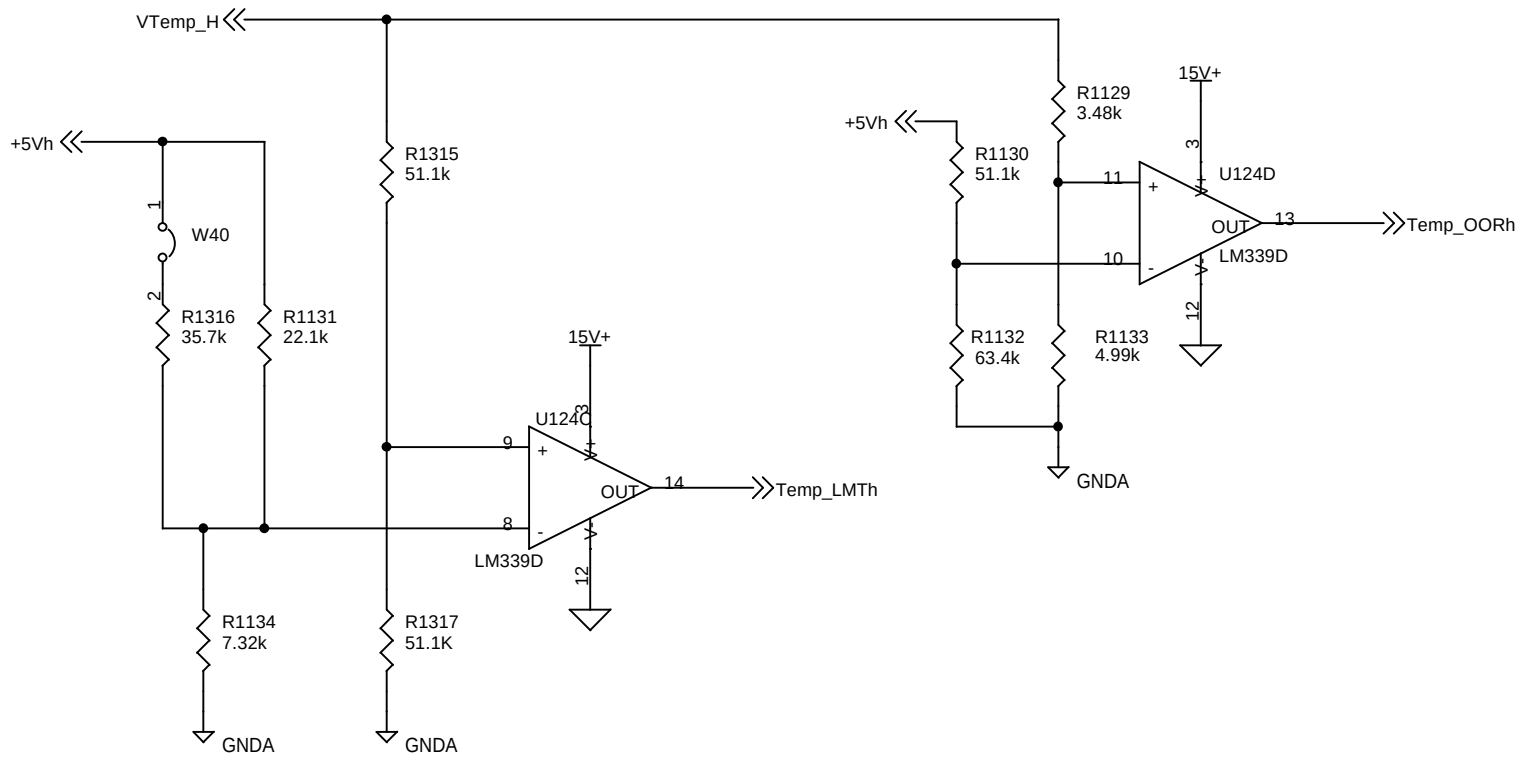

Title	Tempatrue Level Indicator	
Size A	Document Number HEP008	Rev 3.3
Date: Tuesday, November 21, 2000	Sheet 86 of 98	

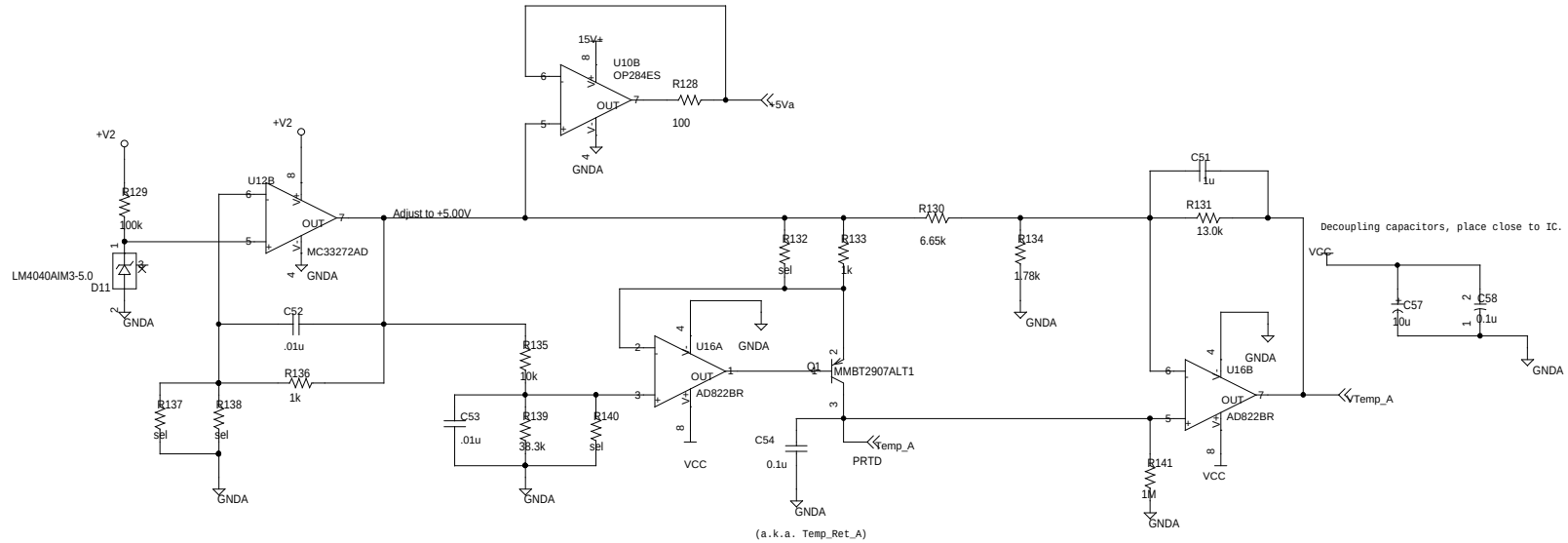

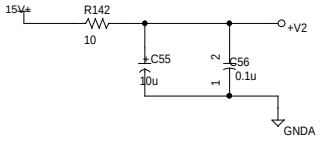

Notes:

1. Pick a FET in place of Q2 for lower error.

2. Ideal value for R31||R32 is 5.234k

3. Ideal value for R33||R34 is 1.192k

4. Check drive on OP-284

5. Size R25

6. Adjust R35 for 1mA max through thermistor

Note:
Temperature sensor is Pt RTD 1kOhm@0deg C.
3.85 deltaOhm / deg C.
Supply should be constant 1mA.

TEMP is one side of the PRTD, the raw temperature voltage
~1v +/-3.85mV/(deg.C).

TEMP_RET is the current-return side.

Electronics Design Laboratory

Tim J. Sobering
124 Burt Hall
Kansas State University
Manhattan, KS 66506-0400

Title: Temperature Monitoring

Size	Document Number:	REV
B	HEP008	3.3

Date: Tuesday, November 21, 2000 Page 87 of 98

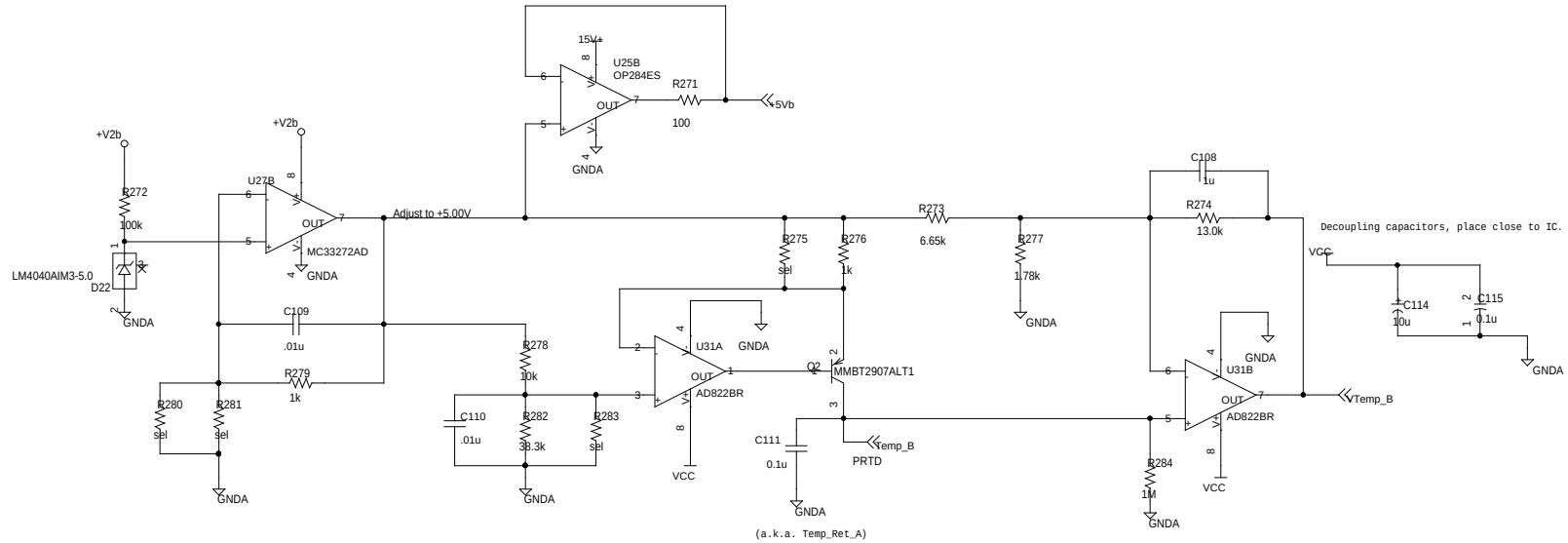

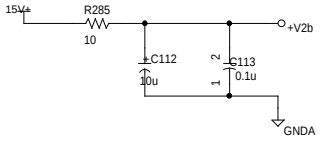

Notes:

1. Pick a FET in place of Q2 for lower error.
2. Ideal value for R31||R32 is 5.234k
3. Ideal value for R33||R34 is 1.192k
4. Check drive on OP-284
5. Size R25
6. Adjust R35 for 1mA max through thermistor

Note:
Temperature sensor is Pt RTD 1kOhm@0deg C.
3.85 deltaOhm / deg C.
Supply should be constant 1mA.

TEMP is one side of the PRTD, the raw temperature voltage
~1v +/-3.85mV/(deg.C).

TEMP_RET is the current-return side.

Electronics Design Laboratory

Tim J. Sobering
124 Burt Hall
Kansas State University
Manhattan, KS 66506-0400

Title: Temperature Monitoring

Size	Document Number:	REV
B	HEP008	3.3

Date: Tuesday, November 21, 2000 Page 88 of 98

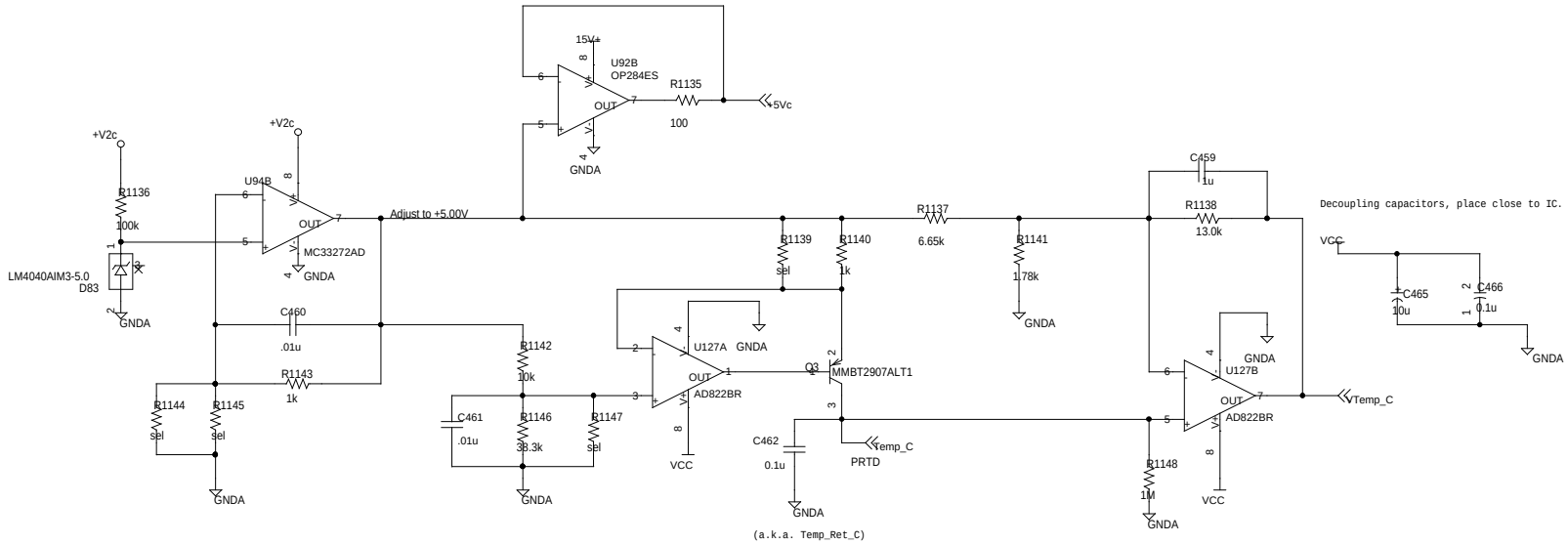

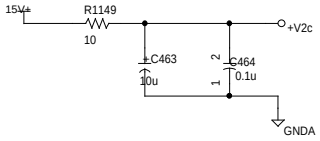

Note:
Temperature sensor is Pt RTD 1kOhm@0deg C.
3.85 deltaOhm / deg C.
Supply should be constant 1mA.

TEMP is one side of the PRTD, the raw temperature voltage
~1v +/-3.85mV/(deg.C).

TEMP_RET is the current-return side.

Notes:

1. Pick a FET in place of Q2 for lower error.
2. Ideal value for R31||R32 is 5.234k
3. Ideal value for R33||R34 is 1.192k
4. Check drive on OP-284
5. Size R25
6. Adjust R35 for 1mA max through thermistor

Electronics Design Laboratory

Tim J. Sobering
124 Burt Hall
Kansas State University
Manhattan, KS 66506-0400

Title: Temperature Monitoring

Size	Document Number:	REV
B	HEP008	3.3

Date: Tuesday, November 21, 2000 Page 89 of 98

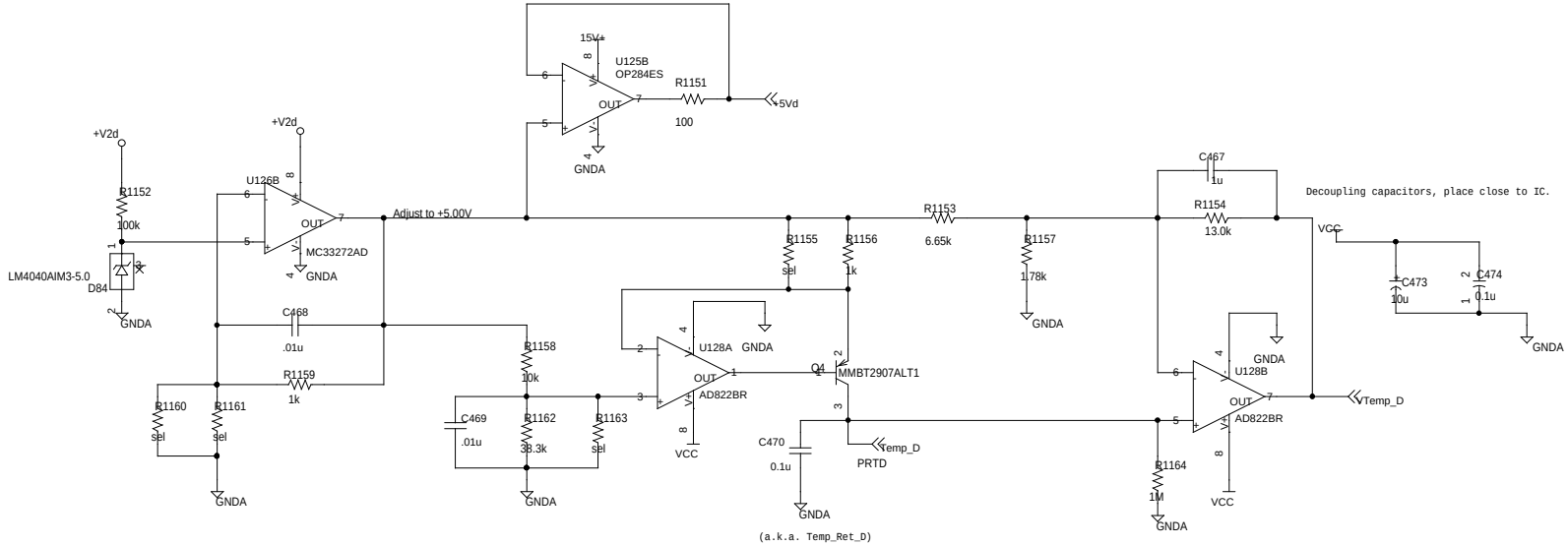

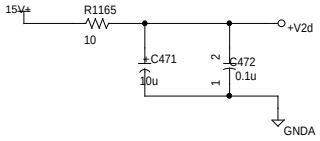

Notes:

1. Pick a FET in place of Q2 for lower error.

2. Ideal value for R31||R32 is 5.234k

3. Ideal value for R33||R34 is 1.192k

4. Check drive on OP-284

5. Size R25

6. Adjust R35 for 1mA max through thermistor

Note:
Temperature sensor is Pt RTD 1kOhm@0deg C.
3.85 deltaOhm / deg C.
Supply should be constant 1mA.

TEMP is one side of the PRTD, the raw temperature voltage
~1v +/-3.85mV/(deg.C).

TEMP_RET is the current-return side.

Electronics Design Laboratory

Tim J. Sobering
124 Burt Hall
Kansas State University
Manhattan, KS 66506-0400

Title: Temperature Monitoring

Size	Document Number:	REV
B	HEP008	3.3

Date: Tuesday, November 21, 2000 Page 90 of 98

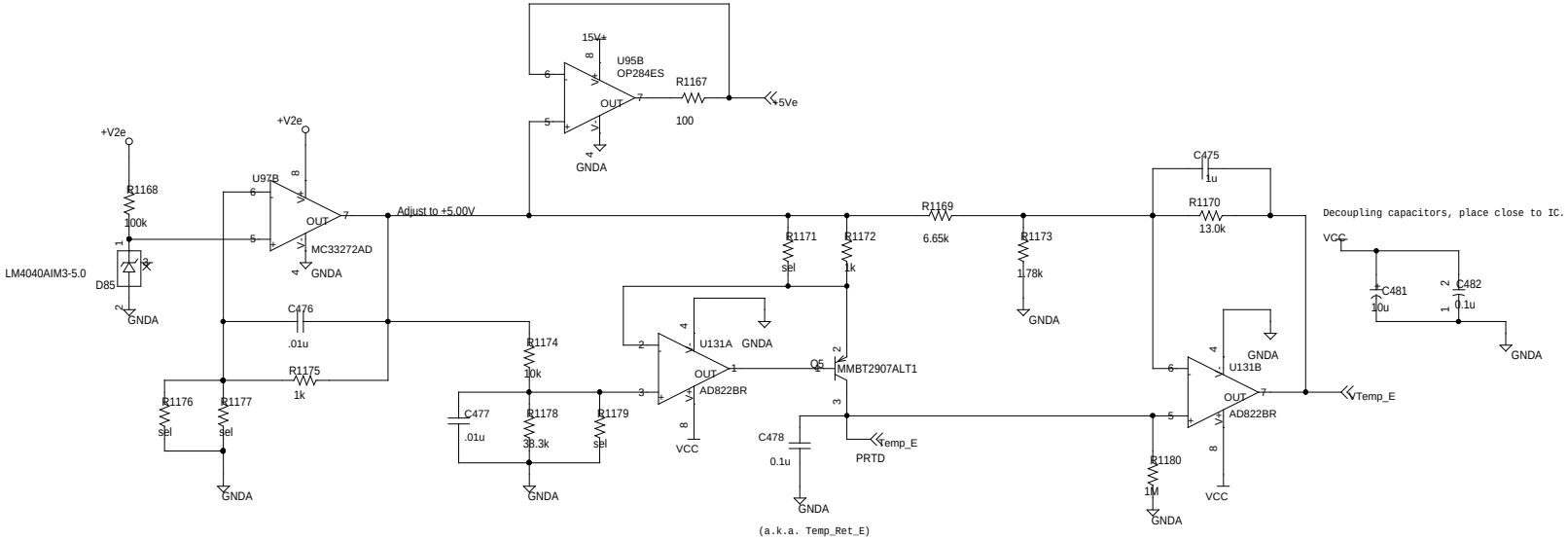

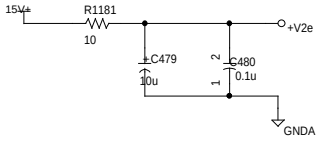

Notes:

1. Pick a FET in place of Q2 for lower error.
2. Ideal value for R31||R32 is 5.234k
3. Ideal value for R33||R34 is 1.192k
4. Check drive on OP-284
5. Size R25
6. Adjust R35 for 1mA max through thermistor

Note:
Temperature sensor is Pt RTD 1kOhm@0deg C.
3.85 deltaOhm / deg C.
Supply should be constant 1mA.

TEMP is one side of the PRTD, the raw temperature voltage
~1v +/-3.85mV/(deg.C).

TEMP_RET is the current-return side.

Electronics Design Laboratory

Tim J. Sobering
124 Burt Hall
Kansas State University
Manhattan, KS 66506-0400

Title: Temperature Monitoring

Size	Document Number:	REV
B	HEP008	3.3

Date: Tuesday, November 21, 2000 Page 91 of 98

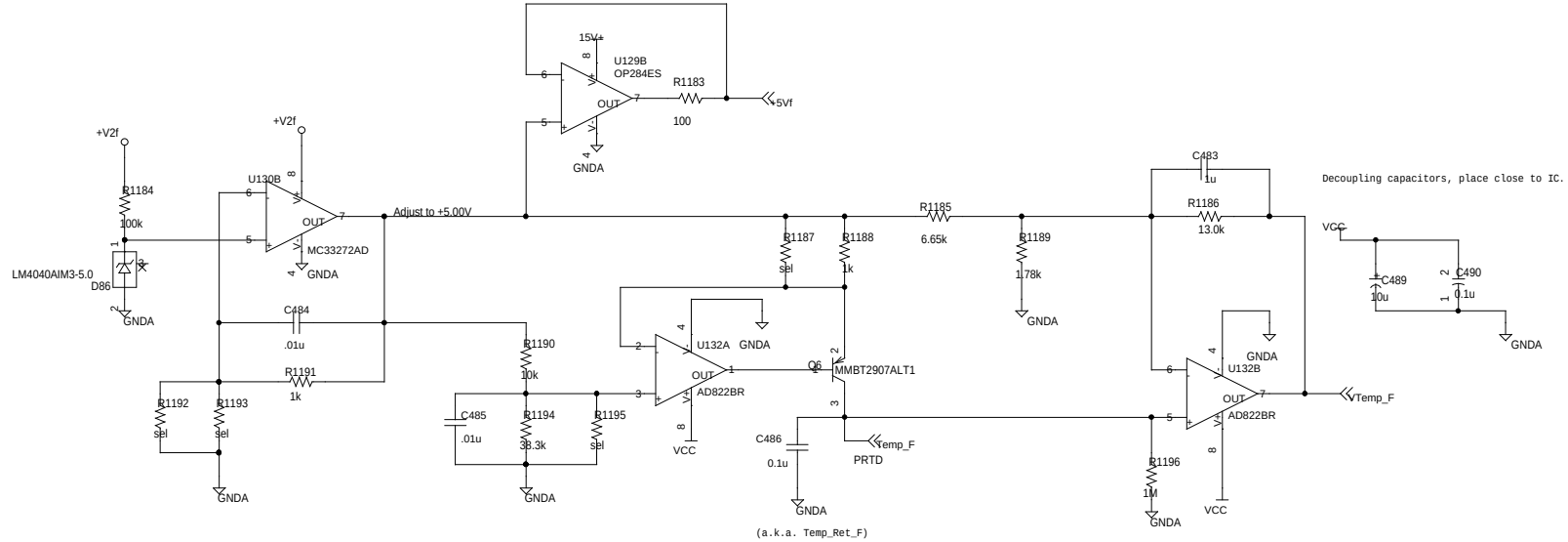

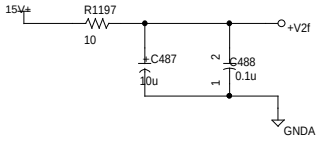

Notes:

1. Pick a FET in place of Q2 for lower error.
2. Ideal value for R31||R32 is 5.234k
3. Ideal value for R33||R34 is 1.192k
4. Check drive on OP-284
5. Size R25
6. Adjust R35 for 1mA max through thermistor

Note:
Temperature sensor is Pt RTD 1kOhm@0deg C.
3.85 deltaOhm / deg C.
Supply should be constant 1mA.

TEMP is one side of the PRTD, the raw temperature voltage
~1v +/-3.85mV/(deg.C).

TEMP_RET is the current-return side.

Electronics Design Laboratory

Tim J. Sobering
124 Burt Hall
Kansas State University
Manhattan, KS 66506-0400

Title: Temperature Monitoring

Size	Document Number:	REV
B	HEP008	3.3

Date: Tuesday, November 21, 2000 Page 92 of 98

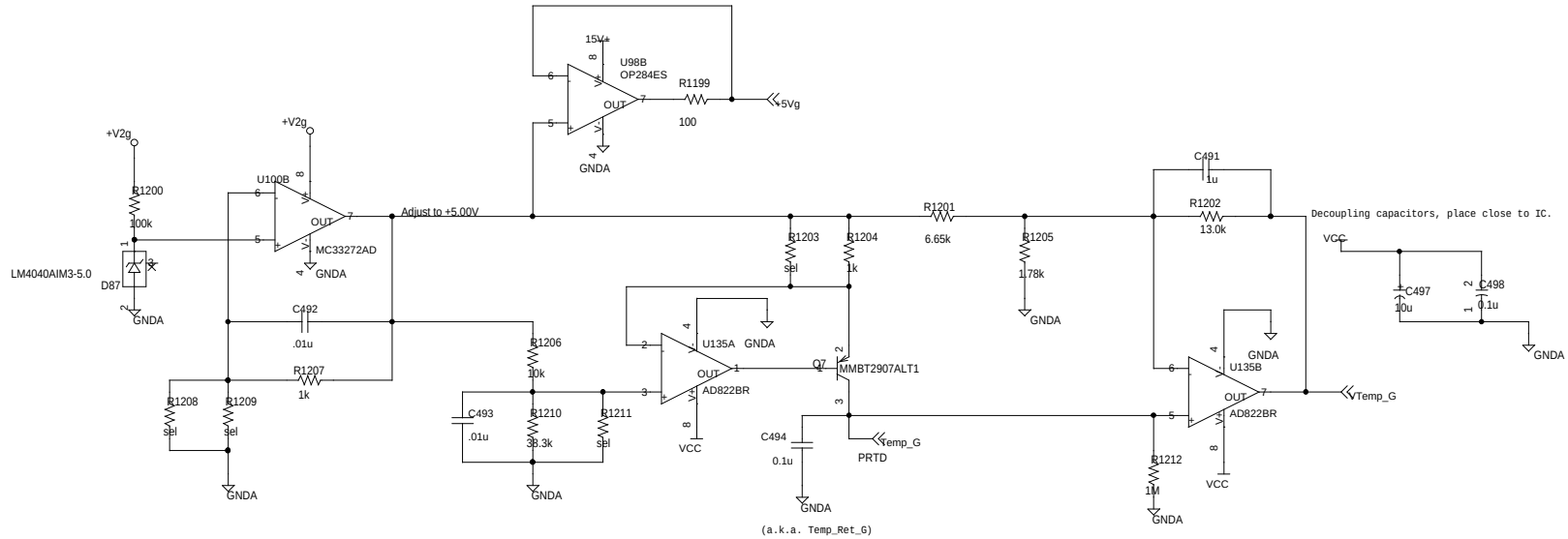

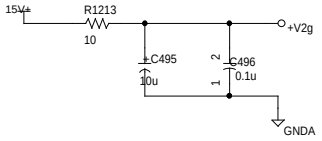

Notes:

1. Pick a FET in place of Q2 for lower error.
2. Ideal value for R31||R32 is 5.234k
3. Ideal value for R33||R34 is 1.192k
4. Check drive on OP-284
5. Size R25
6. Adjust R35 for 1mA max through thermistor

Note:
Temperature sensor is Pt RTD 1kOhm@0deg C.
3.85 deltaOhm / deg C.
Supply should be constant 1mA.

TEMP is one side of the PRTD, the raw temperature voltage
~1v +/-3.85mV/(deg.C).

TEMP_RET is the current-return side.

Electronics Design Laboratory

Tim J. Sobering
124 Burt Hall
Kansas State University
Manhattan, KS 66506-0400

Title: Temperature Monitoring

Size	Document Number:	REV
B	HEP008	3.3

Date: Tuesday, November 21, 2000 Page 93 of 98

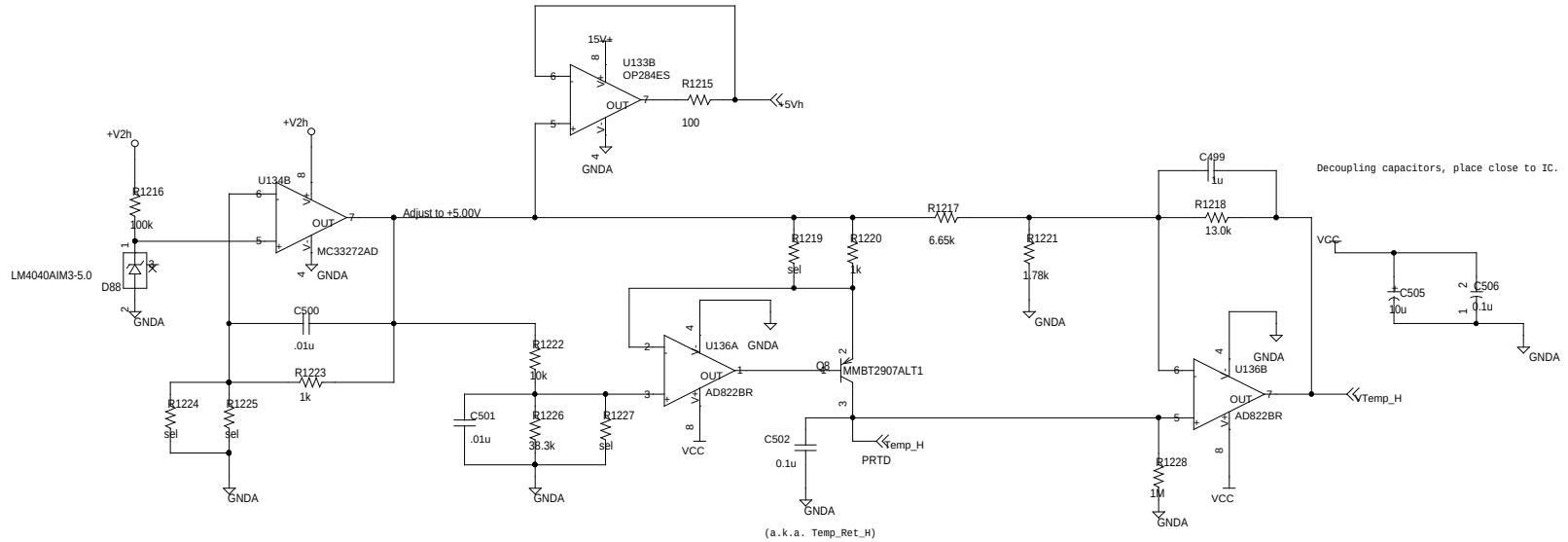

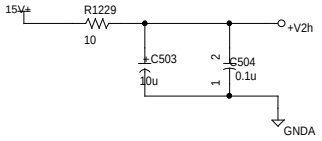

Notes:

1. Pick a FET in place of Q2 for lower error.
2. Ideal value for R31||R32 is 5.234k
3. Ideal value for R33||R34 is 1.192k
4. Check drive on OP-284
5. Size R25
6. Adjust R35 for 1mA max through thermistor

Note:
Temperature sensor is Pt RTD 1kOhm@0deg C.
3.85 deltaOhm / deg C.
Supply should be constant 1mA.

TEMP is one side of the PRTD, the raw temperature voltage
~1v +/-3.85mV/(deg.C).

TEMP_RET is the current-return side.

Electronics Design Laboratory

Tim J. Sobering
124 Burt Hall
Kansas State University
Manhattan, KS 66506-0400

Title: Temperature Monitoring

Size	Document Number:	REV
B	HEP008	3.3

Date: Tuesday, November 21, 2000 Page 94 of 98

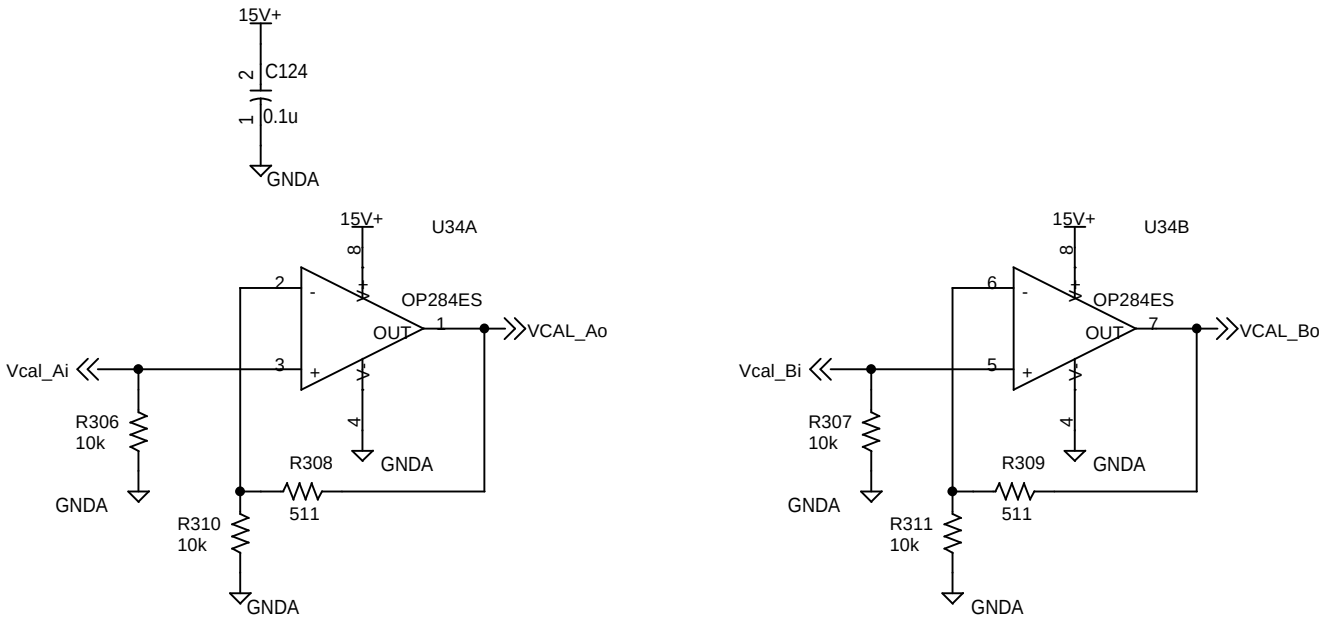

Title	Amplifiers for Vcal signal	
Size A	Document Number HEP008	Rev 3.3
Date: Tuesday, November 21, 2000	Sheet 95 of 98	

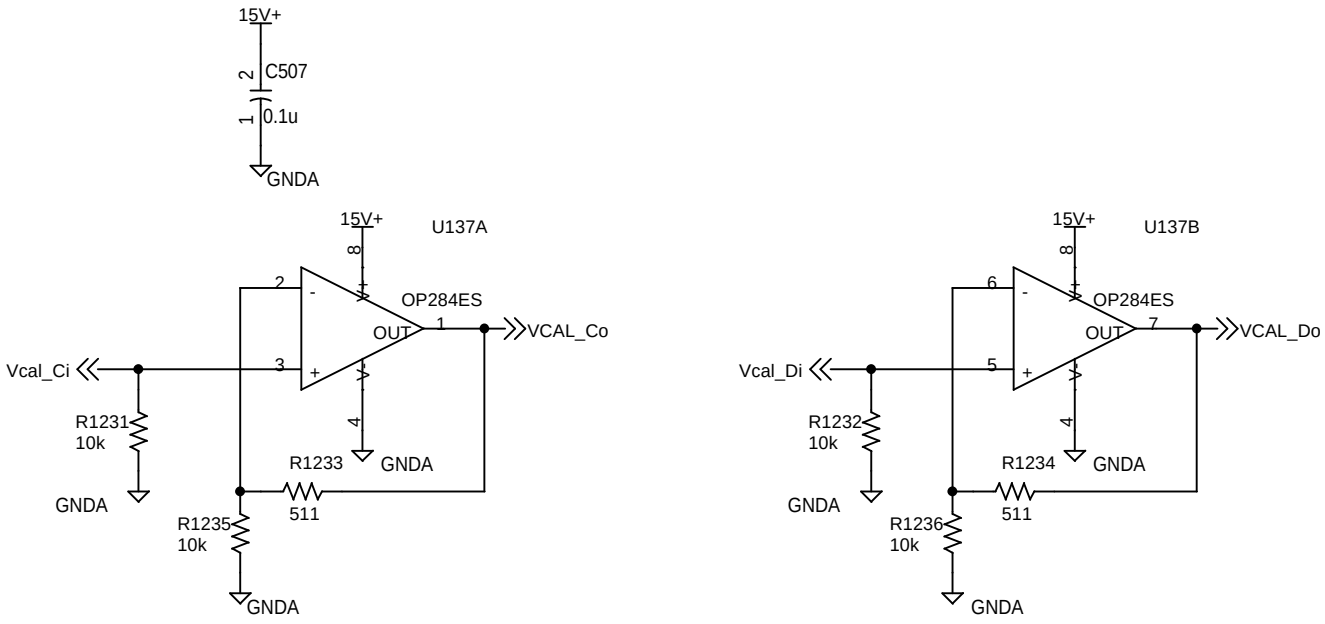

Title	Amplifiers for Vcal signal	
Size A	Document Number HEP008	Rev 3.3
Date: Tuesday, November 21, 2000	Sheet 96 of 98	

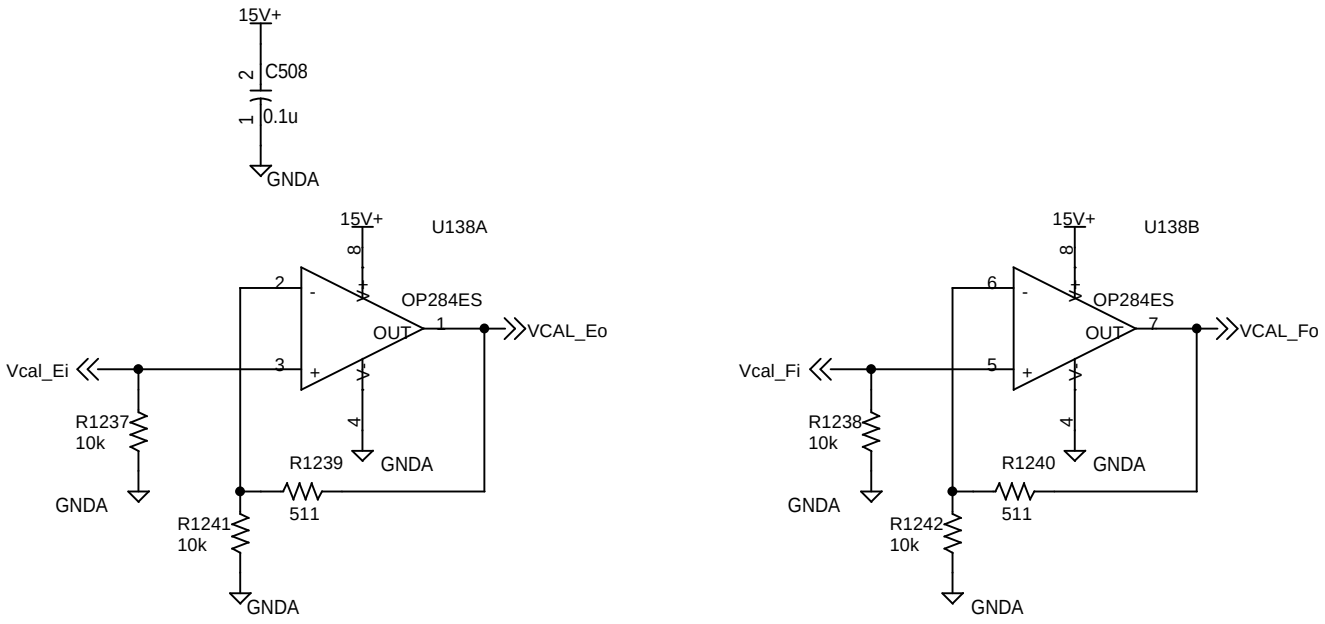

Title	Amplifiers for Vcal signal	
Size A	Document Number HEP008	Rev 3.3
Date: Tuesday, November 21, 2000	Sheet 97 of 98	

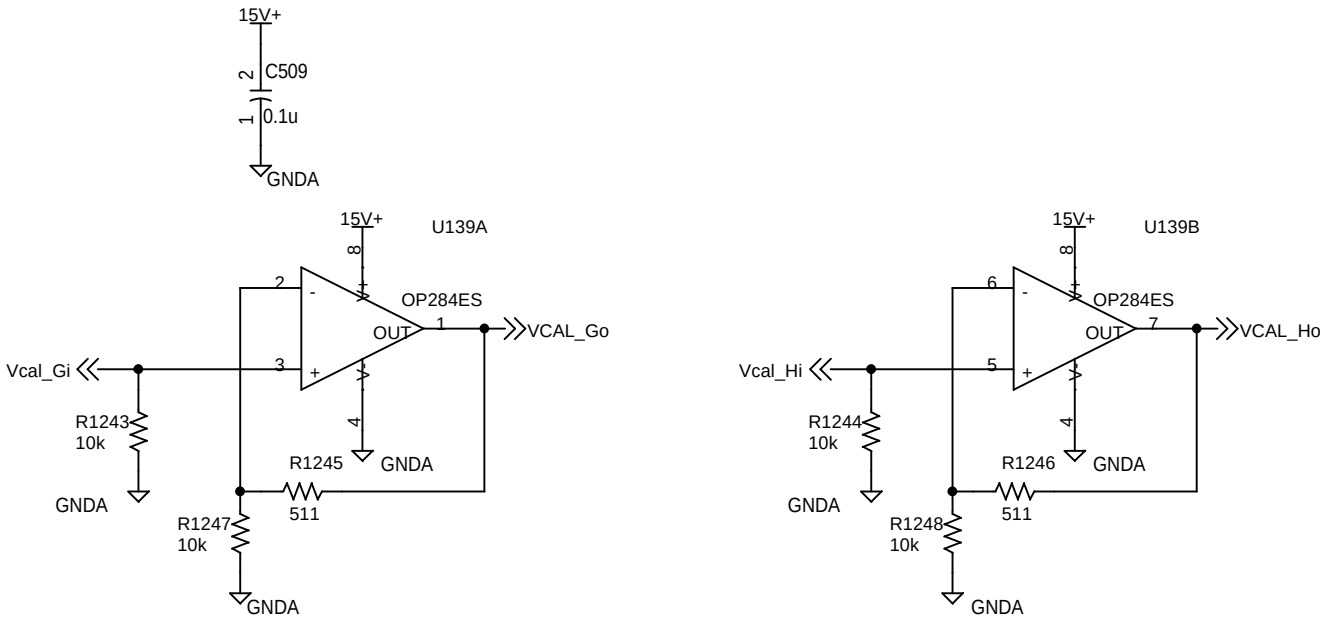

Title	Amplifiers for Vcal signal	
Size A	Document Number HEP008	Rev 3.3
Date: Tuesday, November 21, 2000	Sheet 98 of 98	