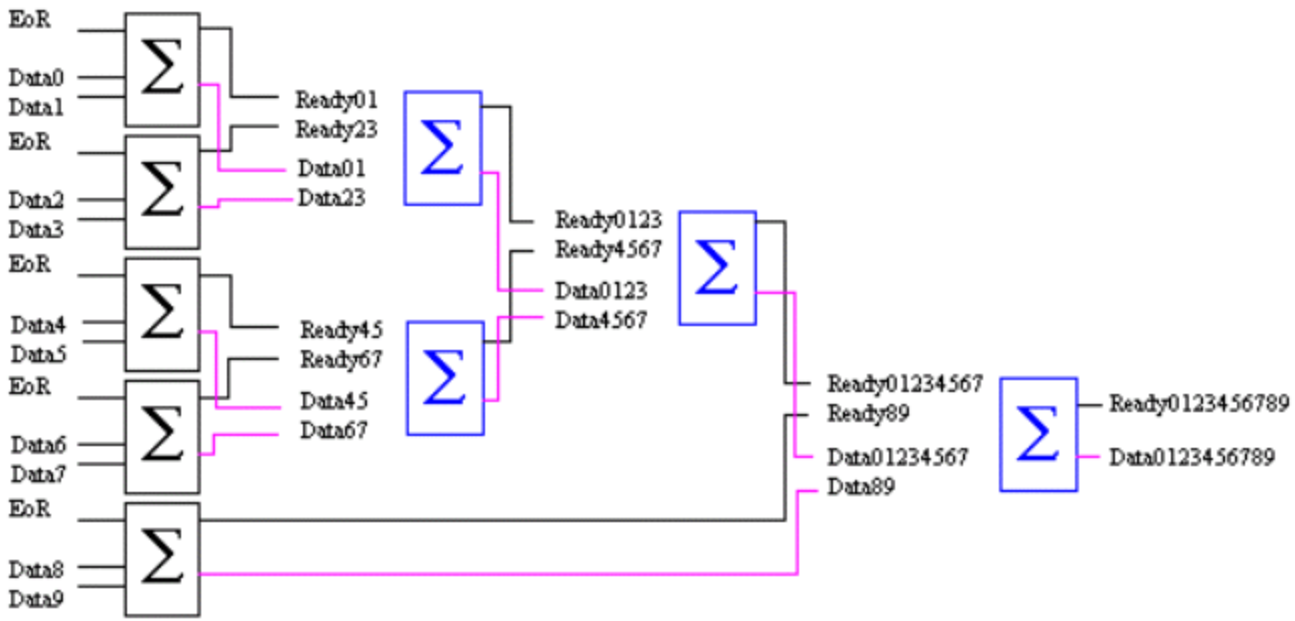

Figure 1 Pipeline Chain

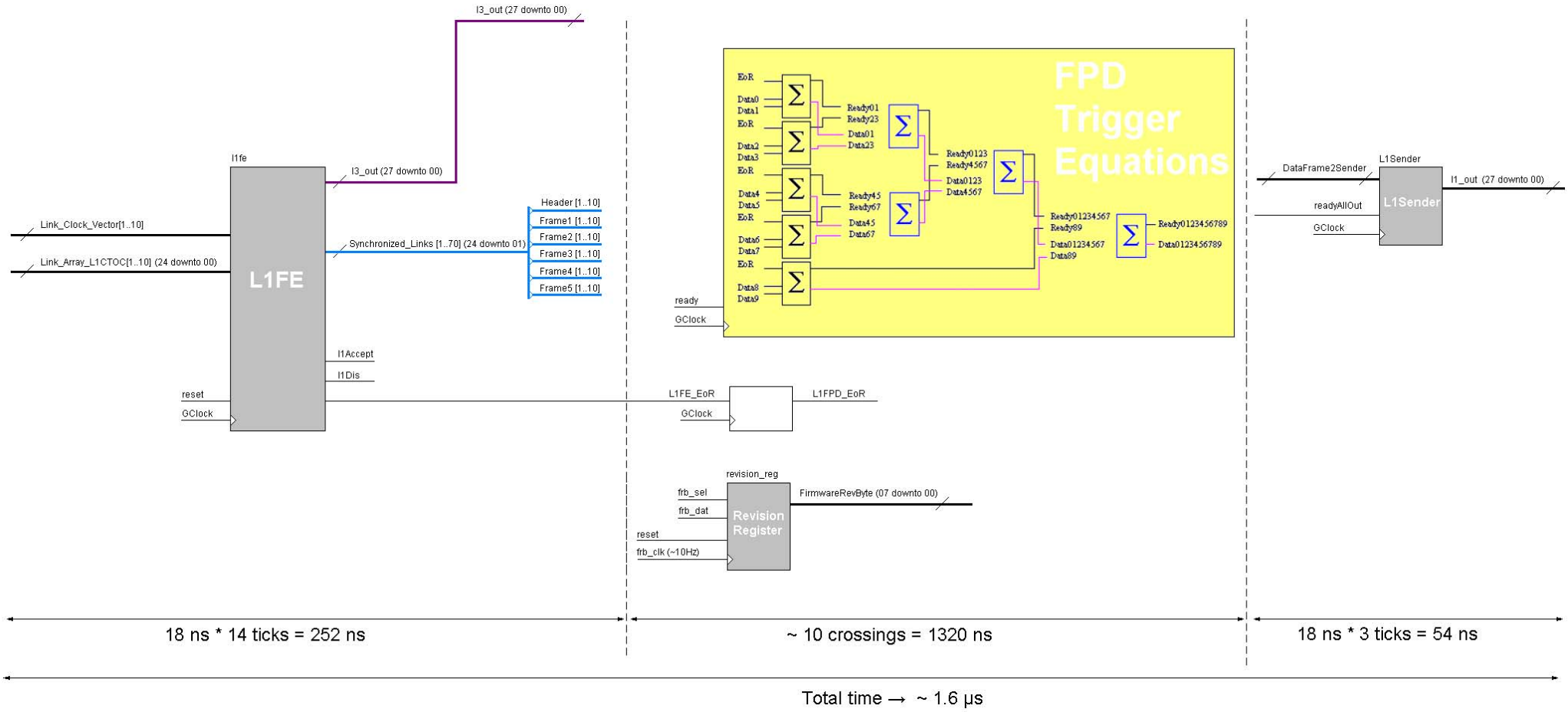

Figure 2 FPD DFE VHDL Firmware - Top Level